2025

Rules for the Classification of Steel Ships

Part 7 Ships of Special Service (Ch 5, 6)

Rules

2025

Guidance Relating to the Rules for the Classification of Steel ships

Part 7 Ships of Special Service (Ch 5, 6)

Guidance

2025

Rules for the Classification of Steel Ships

Part 7

Ships of Special Service

Chapter 5 Ships Carrying Liquefied Gases in Bulk
Chapter 6 Ships Carrying Dangerous Chemicals in Bulk

RA-07B-E

KR

APPLICATION OF PART 7 "SHIPS OF SPECIAL SERVICE(CH 5, 6)"

1. Unless expressly specified otherwise, the requirements in the Rules apply to ships for which contracts for construction are signed on or after 1 July 2025.

2. The amendments to the Rules for 2024 edition and their effective date are as follows;

Effective Date : 1 January 2025 (based on the date of the contract for construction or the date of an application for approval)

CHAPTER 5 SHIPS CARRYING LIQUEFIED GASES IN BULK

Section 5 Process Pressure Vessels and Liquid, Vapour and Pressure Piping Systems

- 513.1 (4) has been newly added.

CONTENTS

CHAPTER 5 SHIPS CARRYING LIQUEFIED GASES IN BULK ····· 1

Section 1 General ····· 1
Section 2 Ship Survival Capability and Location of Cargo Tanks ····· 8
Section 3 Ship Arrangements ····· 19
Section 4 Cargo Containment ····· 26
Section 5 Process Pressure Vessels and Liquid, Vapour, and Pressure Piping Systems ····· 52
Section 6 Materials of Construction and Quality Control ····· 62
Section 7 Cargo Pressure/Temperature Control ····· 77
Section 8 Vent Systems for Cargo Containment ····· 80
Section 9 Cargo Containment System Atmosphere Control ····· 85
Section 10 Electrical Installations ····· 87
Section 11 Fire Protection and Fire Extinction ····· 88
Section 12 Mechanical Ventilation in the Cargo Area ····· 92
Section 13 Instrumentation and Automation Systems ····· 93
Section 14 Personnel Protection ····· 98
Section 15 Filling Limits for Cargo Tanks ····· 99
Section 16 Use of Cargo as Fuel ····· 101
Section 17 Special Requirements ····· 106
Section 18 Operating Requirements ····· 115
Section 19 Summary of Minimum Requirements ····· 121

CHAPTER 6 SHIPS CARRYING DANGEROUS CHEMICALS IN BULK ····· 125

Section 1 General ····· 125
Section 2 Ship Survival Capability and Location of Cargo Tanks ····· 130
Section 3 Ship Arrangements ····· 135
Section 4 Cargo Containment ····· 138
Section 5 Cargo Transfer ····· 139
Section 6 Materials of Construction ····· 143
Section 7 Cargo Temperature Control ····· 144
Section 8 Cargo Tank Venting and Gas-freeing Arrangements ····· 145
Section 9 Environmental Control ····· 148
Section 10 Electrical Installations ····· 149
Section 11 Fire Protection and Fire Extinction ····· 150
Section 12 Mechanical Ventilation in the Cargo Area ····· 153
Section 13 Instrumentation ····· 155
Section 14 Personnel Protection ····· 156
Section 15 Special Requirements ····· 158

Section 16 Operational Requirements ····· 174
Section 17 Summary of Minimum Requirements ····· 176
Section 18 List of Chemicals to which this Chapter does not apply ····· 177
Section 19 Index of Products Carried in Bulk ····· 178
Section 20 Transport of Liquid Chemical Wastes ····· 179
Section 21 Criteria for assigning carriage requirements for products subject to the IBC Code ····· 181

CHAPTER 5 SHIPS CARRYING LIQUEFIED GASES IN BULK

Section 1 General

101. Application (IGC Code 1.1)

1. The requirements in this Chapter apply to ships regardless of their size, including those of less than 500 gross tonnage, engaged in the carriage of liquefied gases having a vapour pressure exceeding 0.28 MPa absolute at a temperature of 37.8°C and other products, as shown in **Sec 19**, when carried in bulk.

2. (1) Unless expressly provided otherwise, this Chapter apply to ships whose keels are laid, or which are at a similar stage of construction where:

(A) construction identifiable with the ship begins; and

(B) assembly of that ship has commenced, comprising at least 50 tonnes or 1% of the estimated mass of all structural material, whichever is less,

on or after 1 July 2016.

(2) For the purpose of this Chapter, the expression "ships constructed" means ships the keels of which are laid or which are at a similar stage of construction.

(3) For ships constructed on or after 1 July 1986 and before 1 July 2016, the Society is to ensure that the requirements which are applicable under this Chapter, as adopted by resolution MSC.5(48) as amended by resolutions MSC.17(58), MSC.30(61), MSC.32(63), MSC.59(67), MSC.103(73), MSC.177(79) and MSC.220(82), are complied with.

(4) The requirements for ships constructed before 1 July 1986 and not having the International Certificate of Fitness for the Carriage of Liquefied Gases in Bulk shall be complied with **Annex 7A-1 「Requirements for Ships not having the International Certificate of Fitness for the Carriage of Liquefied Gases in Bulk」.** *(2021)* **【See Guidance】**

3. Ships depending on type are to be in accordance with the following:

(1) When cargo tanks contain products for which this Chapter requires a type 1G ship, neither flammable liquids having a flash point of 60 °C (closed cup test) or less, nor flammable products listed in **Sec 19**, are to be carried in tanks located within the protective zones described in **204. 1 (1)**.

(2) Similarly, when cargo tanks contain products for which this Chapter requires a type 2G/2PG ship, the flammable liquids as described in (1), are not to be carried in tanks located within the protective zones described in **204. 1 (2)**.

(3) In each case, for cargo tanks loaded with products for which this Chapter requires a type 1G or 2G/2PG ship, the restriction applies to the protective zones within the longitudinal extent of the hold spaces for those tanks.

(4) The flammable liquids and products described in (1) may be carried within these protective zones when the quantity of products retained in the cargo tanks, for which this Chapter requires a type 1G or 2G/2PG ship is solely used for cooling, circulation or fuelling purposes.

4. When it is intended to carry products covered by this Chapter and products covered by **Ch 6,** the ship is to comply with the requirements of both Chapters appropriate to the products carried.

(1) The requirements of this Chapter are to take precedence when a ship is designed and constructed for the carriage of the following products:

(A) those listed exclusively in **Sec 19** of this Chapter; and

(B) one or more of the products that are listed both in this Chapter and in **Ch 6.** These products are marked with an asterisk in column "a" in the table contained within **Sec 19**.

(2) When a ship is intended to exclusively carry one or more of the products referred to in (1) (B), the requirements of **Ch 6**, as amended, are to apply.

5. Where reference is made in this Chapter to a paragraph, all the provisions of the subparagraph of that designation are to apply.

6. When a ship is intended to operate for periods at a fixed location in a re-gasification and gas discharge mode or a gas receiving, processing, liquefaction and storage mode, the Society involved in the operation are to take appropriate steps to ensure implementation of the provisions of this Chapter as are applicable to the proposed arrangements. Furthermore, additional requirements are to

be established based on the principles of this Chapter as well as recognized standards that address specific risks not envisaged by it. Such risks may include, but not be limited to:

(1) fire and explosion;
(2) evacuation;
(3) extension of hazardous areas;
(4) pressurized gas discharge to shore;
(5) high-pressure gas venting;
(6) process upset conditions;
(7) storage and handling of flammable refrigerants;
(8) continuous presence of liquid and vapour cargo outside the cargo containment system;
(9) tank over-pressure and under-pressure;
(10) ship-to-ship transfer of liquid cargo; and
(11) collision risk during berthing manoeuvres.

7. Where a risk assessment or study of similar intent is utilized within this Chapter, the results are also to include, but not be limited to, the following as evidence of effectiveness:

(1) description of methodology and standards applied;
(2) potential variation in scenario interpretation or sources of error in the study;
(3) validation of the risk assessment process by an independent and suitable third party;
(4) quality system under which the risk assessment was developed;
(5) the source, suitability and validity of data used within the assessment;
(6) the knowledge base of persons involved within the assessment;
(7) system of distribution of results to relevant parties; and
(8) validation of results by an independent and suitable third party.

8. The ship's hull, machinery and equipment not specified in this Chapter are generally to comply with the requirements in the relevant Parts of the **Rules and Guidance for the Classification of Steel Rules.** *(2021)*

9. As ships with a length of 150m or more and with membrane-type LNG cargo containment systems contracted for construction after January 1 2021, **Pt 15** of **the Classification and Steel Ship Rules** should be complied. *(2021)*

102. Approval for plans

For classification survey during construction, the following plans and documents as may be required depending upon the products intended to be loaded, condition of cargo storage, construction of cargo containment system and other design conditions are to be submitted in triplicate before the work is commenced.

1. Plans and data for approval

(1) Manufacturing specifications for cargo tanks, insulations and secondary barriers (including welding procedures, inspection and testing procedures for weld and cargo tanks, properties of insulation materials and secondary barriers and their processing manual and working standards)
(2) Details of cargo tank construction and cargo containment system *(2019)*
(3) Arrangement of cargo tank accessories including details of fittings inside the tanks
(4) Details of cargo tank supports, deck portions through which cargo tanks penetrate, and their sealing devices
(5) Details of secondary barriers
(6) Specifications and standards of materials (including insulations) used for cargo piping system in connection with design pressure and/or temperature
(7) Specifications and standards of materials of cargo tanks, insulations, secondary barriers and cargo tank supports
(8) Layout and details of attachment for insulations
(9) Constructions of cargo pumps, cargo compressors and their prime movers
(10) Constructions of main parts of refrigeration systems
(11) Piping diagrams of cargo and instrument
(12) Piping diagrams of refrigerant for refrigeration systems
(13) Bilge arrangements and ventilation systems in hold spaces or interbarrier spaces, cargo pump room, cargo compressor room and cargo control room
(14) Arrangement of sensors for gas detectors, temperature indicators, and pressure gauges

(15) Following plans of inert gas systems where hold spaces or interbarrier spaces are filled by inert gases; *(2019)*
  (A) piping diagrams
  (B) arrangement showing the followings;
    (a) inert gas generator
    (b) non-return device
  (C) details of pressure adjusting devices
(16) Details of pressure relief devices and drainage systems for leakage of liquefied cargo in hold spaces or interbarrier spaces
(17) Sectional assembly, details of nozzles, fitting arrangement and details of fittings for various pressure vessels
(18) Details of valves for special purpose, cargo hoses, expansion joints, filters, etc., for cargo piping system
(19) Following plans of fuel system where cargo is used as fuel; *(2019)*
  (A) piping diagram
  (B) constructions and particulars of gas consumer
  (C) arrangement showing related equipment and fuel line routing
(20) Electric wiring plans and a table of electrical equipment in dangerous spaces
(21) Arrangement of earth connections for cargo tanks, pipe lines, machinery, equipment, etc.
(22) Plans showing dangerous spaces
(23) Fire extinguishing system stipulated in **Sec 11**.
(24) Cargo system operation manuals
(25) Calculation sheets of relieving capacity for pressure relief valves of cargo tank (including calculation of the back pressure in cargo vent system) *(2019)*
(26) Calculation sheets of relieving capacity for pressure relief valves of cargo piping where required by **505.7** *(2019)*
(27) Emergency shutdown systems *(2019)*

2. Plans and data for reference 【See Guidance】

(1) Principal basic design and technical reports of cargo containment systems
(2) Data of test method and its result, where model test is carried out in compliance with the requirements of **Sec 4**.
(3) Data for notch toughness, corrosiveness, physical and mechanical properties of materials and welded parts at the minimum design temperature and room temperature, where new materials or welding methods are adopted for constructing the cargo tanks, secondary barriers, insulations and others
(4) Data of design loads stipulated in **403.**
(5) Calculation sheets of cargo tanks and supports stipulated in **404.** to **406.**
(6) Data of the test method and the results, where model tests were carried out to demonstrate the strength and performance of cargo tanks, insulations, secondary barriers, cargo tank supports
(7) Calculation sheets of heat transfer on the main parts of cargo tank under various condition of loading, where considered necessary by the Society.
(8) Calculation sheets of the thermal stress on the main parts of cargo tank at the condition of the temperature distribution stipulated in (7), where considered necessary by the Society
(9) Calculation sheets of temperature distribution on hull structure, where considered necessary by the Society
(10) Specifications of cargo handling systems
(11) Composition and physical properties of cargoes (including a saturated vapour pressure diagram within the necessary temperature range)
(12) Calculation sheets for capacity of refrigeration systems
(13) Cargo piping arrangement and results of stress analysis where design temperature is below -110 ℃
(14) Calculation sheets of filling limits for cargo tanks
(15) Arrangement of access manholes stipulated in **305.** in cargo tank area and the guide for access through these manholes.
(16) Calculation for ship survival capability stipulated in **Sec 2.**
(17) Equipment for personnel protection stipulated in **Sec 14.**
(18) Capacity calculation of re-liquefaction system and gas combustion unit, if installed *(2019)*

103. Equivalents

The construction and equipment, etc. which do not fall under the provisions of this Chapter but are considered to be equivalent to those required in this Chapter will be accepted by the Society.

104. National regulations

For the construction and equipment of the ship, attention is to be paid to the requirements of the national regulations of the country in which the ship is registered and/or of the port which the ship intended to visit.

105. Definitions (IGC Code 1.3)

The definitions of terms are to be as specified in the following and **Sec 4,** unless otherwise specified elsewhere.

1. **Accommodation spaces** are those spaces used for public spaces, corridors, lavatories, cabins, offices, hospitals, cinemas, games and hobbies rooms, barber shops, pantries containing no cooking appliances and similar spaces.

2. **A class divisions** are those divisions formed by bulkheads and decks which comply with the following criteria:
   (1) they are constructed of steel or other equivalent material;
   (2) they are suitably stiffened;
   (3) they are insulated with approved non-combustible materials such that the average temperature of the unexposed side will not rise more than 140 ℃ above the original temperature, nor will the temperature, at any one point, including any joint, rise more than 180 ℃ above the original temperature, within the time listed below:
   class "A-60" 60 min
   class "A-30" 30 min
   class "A-15" 15 min
   class "A-0" 0 min
   (4) they are constructed as to be capable of preventing the passage of smoke and flame to the end of the one-hour standard fire test; and
   (5) the Society has required a test of a prototype bulkhead or deck in accordance with the Fire Test Procedures Code to ensure that it meets the requirements above for integrity and temperature rise.

3. **Administration** means the Government of the State whose flag the ship is entitled to fly.

4. **Boiling point** is the temperature at which a product exhibits a vapour pressure equal to the atmospheric pressure.

5. **Breadth (B)** means the maximum breadth of the ship, measured amidships to the moulded line of the frame in a ship with a metal shell and to the outer surface of the hull in a ship with a shell of any other material. The breadth (B) should be measured in metres.

6. **Cargo area** is that part of the ship which contains the cargo containment system and cargo pump and compressor rooms and includes deck areas over the full length and breadth of the part of the ship over these spaces. Where fitted, the cofferdams, ballast or void spaces at the after end of the aftermost hold space or at the forward end of the foremost hold space are excluded from the cargo area. **【See Guidance】**

7. **Cargo containment system** is the arrangement for containment of cargo including, where fitted, a primary and secondary barrier, associated insulation and any intervening spaces, and adjacent structure, if necessary, for the support of these elements. If the secondary barrier is part of the hull structure, it may be a boundary of the hold space.

8. **Cargo control room** is a space used in the control of cargo handling operations.

9. **Cargo machinery spaces** are the spaces where cargo compressors or pumps, cargo processing units, are located, including those supplying gas fuel to the engine-room.

10. **Cargo pumps** are pumps used for the transfer of liquid cargo including main pumps, booster pumps, spray pumps, etc.

11. **Cargoes** are products listed in **Sec 19** carried in bulk by ships subject to this Chapter.

12. **Cargo service spaces** are spaces within the cargo area used for workshops, lockers and store-rooms of more than 2 m^2 in area.

13. **Cargo tank** is the liquid-tight shell designed to be the primary container of the cargo and includes all such containers containment systems whether or not they are associated with insulation or secondary barriers or both.

14. **Closed loop sampling** is a cargo sampling system that minimizes the escape of cargo vapour to the atmosphere by returning product to the cargo tank during sampling.

15. **Cofferdam** is the isolating space between two adjacent steel bulkheads or decks. This space may be a void space or a ballast space.

16. **Control stations** are those spaces in which ship's radio or main navigating equipment or the emergency source of power is located or where the fire-recording or fire-control equipment is centralized. This does not include special fire-control equipment which can be most practically located in the cargo area.

17. **Flammable products** are those identified by an "F" in column "f" in the table of **Sec 19**.

18. **Flammability limits** are the conditions defining the state of fuel-oxidant mixture at which application of an adequately strong external ignition source is only just capable of producing flammability in a given test apparatus.

19. **FSS Code** is the Fire Safety Systems Code meaning the International Code for Fire Safety Systems, adopted by the Maritime Safety Committee of the Organization by resolution MSC.98(73), as amended.

20. **Gas carrier** is a cargo ship constructed or adapted and used for the carriage in bulk of any liquefied gas or other products listed in the table of **Sec 19**.

21. **Gas combustion unit(GCU)** is a means of disposing excess cargo vapour by thermal oxidation.

22. **Gas consumer** is any unit within the ship using cargo vapour as a fuel.

23. **Hazardous area** is an area in which an explosive gas atmosphere is, or may be expected to be present, in quantities that require special precautions for the construction, installation and use of electrical equipment. When a gas atmosphere is present, the following hazards may also be present: toxicity, asphyxiation, corrosivity, reactivity and low temperature. These hazards are also to be taken into account and additional precautions for the ventilation of spaces and protection of the crew will need to be considered. Examples of hazardous areas include, but are not limited to, the following: **【See Guidance】**

    (Refer to **Sec 10** for a separate list of examples and classification of hazardous areas for the purpose of selection and design of electrical installations.)

    (1) the interiors of cargo containment systems and any pipework of pressure-relief or other venting systems for cargo tanks, pipes and equipment containing the cargo;
    (2) interbarrier spaces;
    (3) hold spaces where the cargo containment system requires a secondary barrier;
    (4) hold spaces where the cargo containment system does not require a secondary barrier;
    (5) a space separated from a hold space by a single gastight steel boundary where the cargo containment system requires a secondary barrier;
    (6) cargo machinery spaces;
    (7) areas on open deck, or semi-enclosed spaces on open deck, within 3 m of possible sources of gas release, such as cargo valve, cargo pipe flange, cargo machinery space ventilation outlet, etc.;
    (8) areas on open deck, or semi-enclosed spaces on open deck within 1.5 m of cargo machinery space entrances, cargo machinery space ventilation inlets;
    (9) areas on open deck over the cargo area and 3 m forward and aft of the cargo area on the open deck up to a height of 2.4 m above the weather deck;
    (10) an area within 2.4 m of the outer surface of a cargo containment system where such surface is exposed to the weather;
    (11) enclosed or semi-enclosed spaces in which pipes containing cargoes are located, except those

where pipes containing cargo products for boil-off gas fuel burning systems are located;
(12) an enclosed or semi-enclosed space having a direct opening into any hazardous area;
(13) void spaces, cofferdams, trunks, passageways and enclosed or semi-enclosed spaces, adjacent to, or immediately above or below, the cargo containment system;
(14) areas on open deck or semi-enclosed spaces on open deck above and in the vicinity of any vent riser outlet, within a vertical cylinder of unlimited height and 6 m radius centred upon the centre of the outlet and within a hemisphere of 6 m radius below the outlet; and
(15) areas on open deck within spillage containment surrounding cargo manifold valves and 3 m beyond these up to a height of 2.4 m above deck.

24. **Non-hazardous area** is an area other than a hazardous area.

25. **Hold space** is the space enclosed by the ship's structure in which a cargo containment system is situated. **【See Guidance】**

26. **Independent** means that a piping or venting system, for example, is in no way connected to another system and there are no provisions available for the potential connection to other systems. **【See Guidance】**

27. **Insulation space** is the space, which may or may not be an interbarrier space, occupied wholly or in part by insulation.

28. **Interbarrier space** is the space between a primary and a secondary barrier, whether or not completely or partially occupied by insulation or other material. **【See Guidance】**

29. **Length (L)** is the length as defined in the International Convention on Load Lines in force.

30. **Machinery spaces of category A** are those spaces, and trunks to such spaces, which contain:
(1) internal combustion machinery used for main propulsion; or
(2) internal combustion machinery used for purposes other than main propulsion where such machinery has, in the aggregate, a total power output of not less than 375 kW; or
(3) any oil-fired boiler or oil fuel unit or any oil-fired equipment other than boilers, such as inert gas generators, incinerators, etc.

31. **Machinery spaces** are all machinery spaces of category A and all other spaces containing propelling machinery, boilers, oil fuel units, steam and internal combustion engines, generators and major electrical machinery, oil filling stations, refrigerating, stabilizing, ventilation and air-conditioning machinery, and similar spaces and trunks to such spaces.

32. **MARVS** is the maximum allowable relief valve setting of a cargo tank.

33. **Nominated surveyor** is a surveyor nominated/appointed by an Administration to enforce the provisions of the SOLAS Convention regulations with regard to inspections and surveys and the granting of exemptions therefrom.

34. **Oil fuel unit** is the equipment used for the preparation of oil fuel for delivery to an oil-fired boiler, or equipment used for the preparation for delivery of heated oil to an internal combustion engine, and includes any oil pressure pumps, filters and heaters dealing with oil at a pressure of more than 0.18 MPa gauge.

35. **Organization** is the International Maritime Organization (IMO).

36. **Permeability** of a space means the ratio of the volume within that space which is assumed to be occupied by water to the total volume of that space.

37. **Port Administration** means the appropriate authority of the country for the Port where the ship is loading or unloading.

38. **Primary barrier** is the inner element designed to contain the cargo when the cargo containment system includes two boundaries.

39. **Products** is the collective term used to cover the list of gases indicated in **Sec 19** of this Chapter.

40. **Public spaces** are those portions of the accommodation that are used for halls, dining rooms, lounges and similar permanently enclosed spaces.

41. **Recognized organization** is an organization authorized by an Administration in accordance with SOLAS regulation XI-1/1.

42. **Recognized standards** are applicable international or national standards acceptable to the Society or standards laid down and maintained by the recognized organization.

43. **Relative density** is the ratio of the mass of a volume of a product to the mass of an equal volume of fresh water.

44. **Secondary barrier** is the liquid-resisting outer element of a cargo containment system, designed to afford temporary containment of any envisaged leakage of liquid cargo through the primary barrier and to prevent the lowering of the temperature of the ship's structure to an unsafe level. Types of secondary barrier are more fully defined in **Sec 4**.

45. **Separate systems** are those cargo piping and vent systems that are not permanently connected to each other.

46. **Service spaces** are those spaces used for galleys, pantries containing cooking appliances, lockers, mail and specie rooms, store-rooms, workshops other than those forming part of the machinery spaces, and similar spaces and trunks to such spaces.

47. **SOLAS Convention** means the International Convention for the Safety of Life at Sea, 1974, as amended.

48. **Tank cover** is the protective structure intended to either protect the cargo containment system against damage where it protrudes through the weather deck or to ensure the continuity and integrity of the deck structure.

49. **Tank dome** is the upward extension of a portion of a cargo tank. In the case of below-deck cargo containment systems, the tank dome protrudes through the weather deck or through a tank cover.

50. **Thermal oxidation method** means a system where the boil-off vapours are utilized as fuel for shipboard use or as a waste heat system subject to the provisions of **Sec 16** or a system not using the gas as fuel complying with this Chapter.

51. **Toxic products** are those identified by a "T" in column "f" in the table of **Sec 19**.

52. **Turret compartments** are those spaces and trunks that contain equipment and machinery for retrieval and release of the disconnectable turret mooring system, high-pressure hydraulic operating systems, fire protection arrangements and cargo transfer valves.

53. **Vapour pressure** is the equilibrium pressure of the saturated vapour above the liquid, expressed in bar Pascals (Pa) absolute at a specified temperature.

54. **Void space** is an enclosed space in the cargo area external to a cargo containment system, other than a hold space, ballast space, fuel oil tank, cargo pump or compressor room, or any space in normal use by personnel.

Section 2 Ship Survival Capability and Location of Cargo Tanks

201. General (IGC Code 2.1)

1. Ships subject to this Chapter shall survive the hydrostatic effects of flooding following assumed hull damage caused by some external force. In addition, to safeguard the ship and the environment, the cargo tanks shall be protected from penetration in the case of minor damage to the ship resulting, for example, from contact with a jetty or tug boat, and also given a measure of protection from damage in the case of collision or grounding, by locating them at specified minimum distances inboard from the ship's shell plating. Both the damage to be assumed and the proximity of the tanks to the ship's shell shall be dependent upon the degree of hazard presented by the product to be carried. In addition, the proximity of the cargo tanks to the ship's shell shall be dependent upon the volume of the cargo tank.

2. Ships subject to the Chapter shall be designed to one of the following standards:

(1) A type 1G ship is a gas carrier intended to transport the products indicated in **Sec 19** that require maximum preventive measures to preclude their escape.

(2) A type 2G ship is a gas carrier intended to transport the products indicated in **Sec 19**, that require significant preventive measures to preclude their escape.

(3) A type 2PG ship is a gas carrier of 150 m in length or less intended to transport the products indicated in **Sec 19** that require significant preventive measures to preclude their escape, and where the products are carried in type C independent tanks designed (see **423.**) for a MARVS of at least 0.7 MPa gauge and a cargo containment system design temperature of −55°C or above. A ship of this description that is over 150 m in length is to be considered a type 2G ship.

(4) A type 3G ship is a gas carrier intended to carry the products indicated in **Sec 19** that require moderate preventive measures to preclude their escape.

Therefore, a type 1G ship is a gas carrier intended for the transportation of products considered to present the greatest overall hazard and types 2G/2PG and type 3G for products of progressively lesser hazards. Accordingly, a type 1G ship shall survive the most severe standard of damage and its cargo tanks shall be located at the maximum prescribed distance inboard from the shell plating.

3. The ship type required for individual products is indicated in column "c" in the table of **Sec 19**.

4. If a ship is intended to carry more than one of the products listed in **Sec 19**, the standard of damage shall correspond to the product having the most stringent ship type requirements. The requirements for the location of individual cargo tanks, however, are those for ship types related to the respective products intended to be carried.

5. For the purpose of this Chapter, the position of the moulded line for different containment systems is shown in **Fig 7.5.1** (a) to (e).

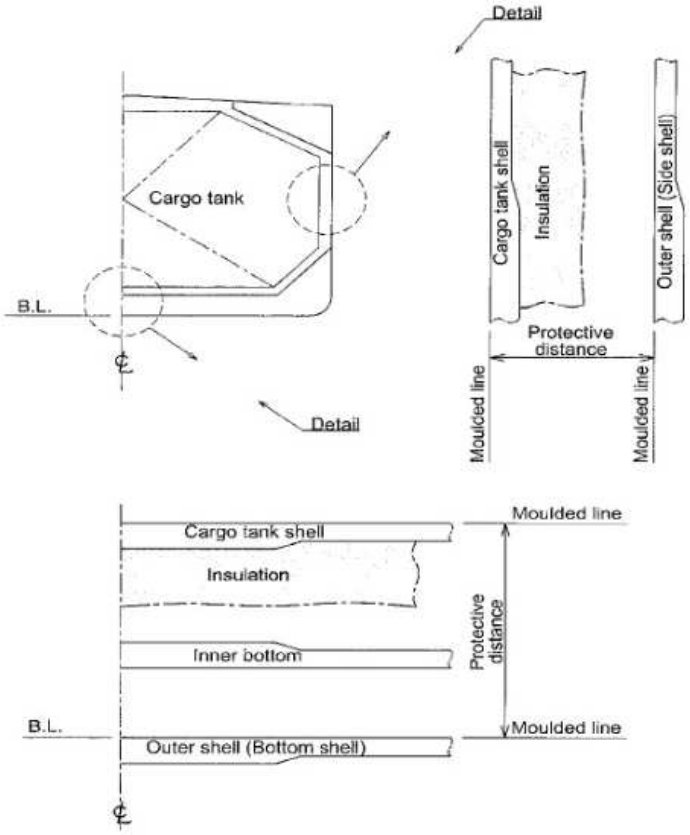

Fig 7.5.1 (a) Protective distance (Independent prismatic tank)

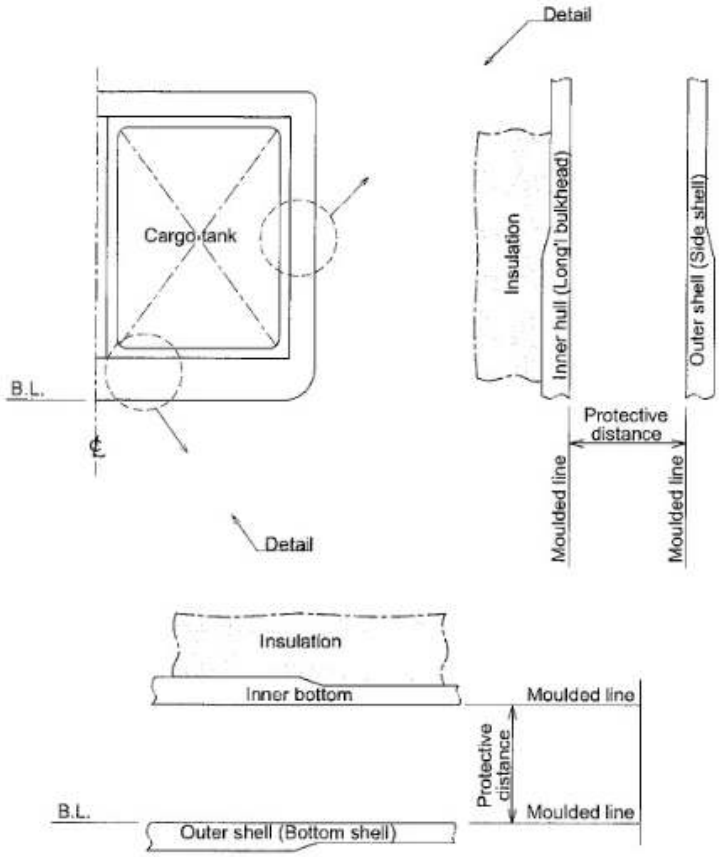

Fig 7.5.1 (b) Protective distance (Semi-membrane tank)

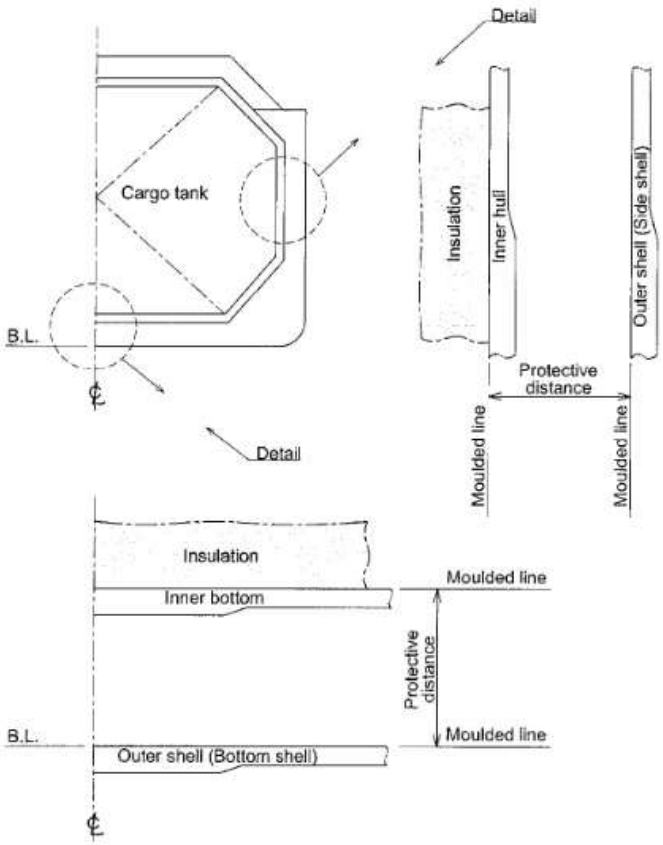

Fig 7.5.1 (c) Protective distance (Membrane tank)

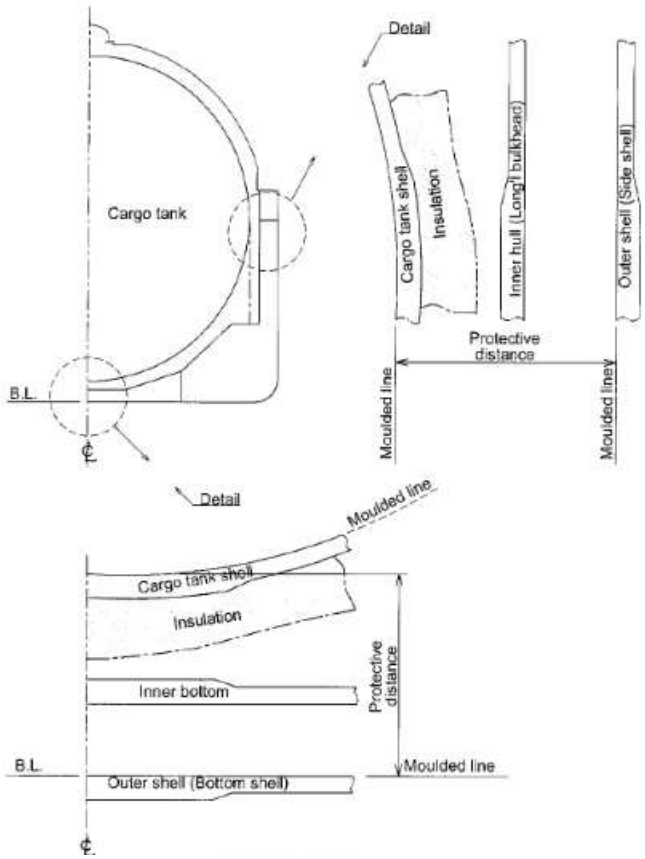

Fig 7.5.1 (d) Protective distance (Spherical tank)

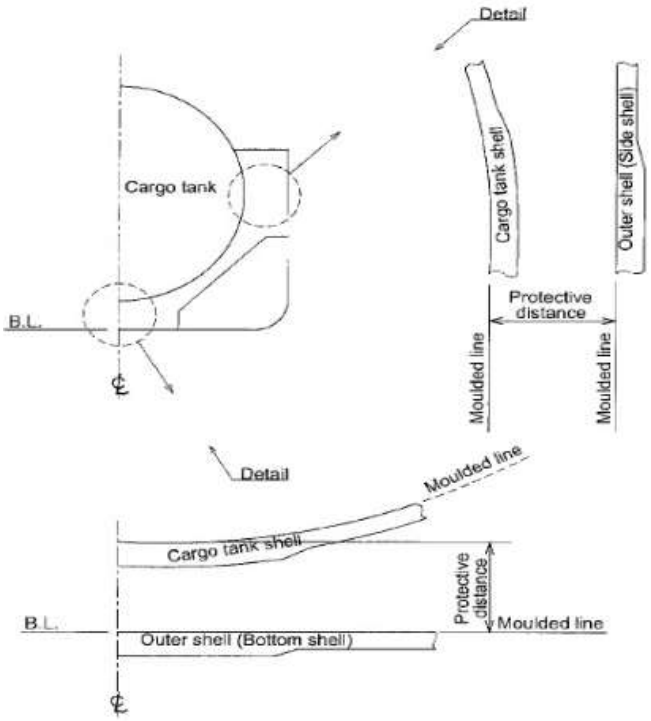

Fig 7.5.1 (e) Protective distance (Pressure type tank)

202. Freeboard and stability (IGC Code 2.2)

1. Ships subject to the Chapter may be assigned the minimum freeboard permitted by the International Convention on Load Lines in force. However, the draught associated with the assignment shall not be greater than the maximum draught otherwise permitted by this Chapter.

2. The stability of the ship, in all seagoing conditions and during loading and unloading cargo, shall comply with the requirements of this Society. This includes partial filling and loading and unloading at sea, when applicable. Stability during ballast water operations shall fulfil stability criteria.

3. When calculating the effect of free surfaces of consumable liquids for loading conditions, it shall be assumed that, for each type of liquid, at least one transverse pair or a single centre tank has a free surface. The tank or combination of tanks to be taken into account shall be those where the effect of free surfaces is the greatest. The free surface effect in undamaged compartments shall be calculated by a method acceptable to the Society.

4. Solid ballast shall not normally be used in double bottom spaces in the cargo area. Where, however, because of stability considerations, the fitting of solid ballast in such spaces becomes unavoidable, its disposition shall be governed by the need to enable access for inspection and to ensure that the impact loads resulting from bottom damage are not directly transmitted to the cargo tank structure. **【See Guidance】**

5. The master of the ship shall be supplied with a loading and stability information booklet. This booklet shall contain details of typical service conditions, loading, unloading and ballasting operations, provisions for evaluating other conditions of loading and a summary of the ship's survival capabilities. The booklet shall also contain sufficient information to enable the master to load and operate the ship in a safe and seaworthy manner.

6. All ships, subject to the **IGC Code** shall be fitted with a stability instrument, capable of verifying compliance with intact and damage stability requirements, approved by this Society having regard to the performance standards recommended by the Organization. **【See Guidance】**
   (1) ships constructed before 1 July 2016 shall comply with this paragraph at the first scheduled renewal survey of the ship after 1 July 2016 but not later than 1 July 2021;
   (2) notwithstanding the requirements of (1) a stability instrument installed on a ship constructed be-

fore 1 July 2016 need not be replaced provided it is capable of verifying compliance with intact and damage stability, to the satisfaction of this Society.

(3) However where deemed appropriate by the Society, the requirements of **6.** may be exempted, and this exemption shall be specified in **IGC Certificate.**

7. The ships not subjected to **6.** are to be compliance with the requirements of flag states.

8. Conditions of loading

Damage survival capability shall be investigated on the basis of loading information submitted to the Society for all anticipated conditions of loading and variations in draught and trim. This shall include ballast and, where applicable, cargo heel.

203. Damage assumptions (IGC Code 2.3)

1. The assumed maximum extent of damage shall be:

(1) Side damage:		
(A) Longitudinal extent:	1/3 $L^{2/3}$ or 14.5 m, whichever is less	
(B) Transverse extent:	B/5 or 11.5 m, whichever is less, measured inboard from the moulded line of the outer shell at right angles to the centreline at the level of the summer waterline	
(C) Vertical extent:	Upwards, without limit, from the moulded line of the outer shell	
(2) Bottom damage:		
	For 0.3 L from the forward perpendicular of the ship	Any other part of the ship
(A) Longitudinal extent:	1/3$L^{2/3}$ or 14.5 m, whichever is less	1/3$L^{2/3}$ or 14.5 m, whichever is less
(B) Transverse extent:	B/6 or 10 m, whichever is less	B/6 or 5 m, whichever is less
(C) Vertical extent:	B/15 or 2 m, whichever is less, measured from the moulded line of the bottom shell plating at centreline (see **204. 3**)	B/15 or 2 m, whichever is less measured from the moulded line of the bottom shell plating at centreline (see **204. 3**)

2. Other damage:

(1) If any damage of a lesser extent than the maximum damage specified in **1.** would result in a more severe condition, such damage should be assumed.

(2) Local damage anywhere in the cargo area extending inboard distance d as defined in **204. 1**, measured normal to the moulded line of the outer shell shall be considered. Bulkheads shall be assumed damaged when the relevant subparagraphs of **206. 1** apply. If a damage of a lesser extent than d would result in a more severe condition, such damage shall be assumed. **【See Guidance】**

204. Location of cargo tanks (IGC Code 2.4)

1. Cargo tanks shall be located at the following distances inboard:

(1) Type 1G ships: from the moulded line of the outer shell, not less than the transverse extent of damage specified in **203. 1** (1) (B) and, from the moulded line of the bottom shell at centreline, not less than the vertical extent of damage specified in **203. 1** (2) (C) and nowhere less than d where d is as follows:

(A) for V_c below or equal $1{,}000\,\mathrm{m}^3$, $d = 0.8\mathrm{m}$;

(B) for $1{,}000\,\mathrm{m}^3 < V_c < 5{,}000\mathrm{m}^3$, $d = 0.75 + V_c \times 0.2/4{,}000\,\mathrm{m}$;

(C) for $5{,}000\,\mathrm{m}^3 \leq V_c < 30{,}000\mathrm{m}^3$, $d = 0.8 + V_c/25{,}000\,\mathrm{m}$; and

(D) for $V_c \geq 30{,}000\,\mathrm{m}^3$, $d = 2\,\mathrm{m}$,

where:

- V_c corresponds to 100% of the gross design volume of the individual cargo tank at 20°C, including domes and appendages (see **Fig 7.5.2** and **Fig 7.5.3**). For the purpose of cargo tank protective distances, the cargo tank volume is the aggregate volume of all the parts of tank that have a common bulkhead(s); and
- d is measured at any cross section at a right angle from the moulded line of outer shell.

Tank size limitations may apply to type 1G ship cargoes in accordance with **Sec 17**.

(2) Types 2G/2PG: from the moulded line of the bottom shell at centreline not less than the vertical extent of damage specified in **203. 1** (2) (C) and nowhere less than d as indicated in **204. 1** (1) (see **Fig 7.5.2** and **Fig 7.5.4**).

(3) Type 3G ships: from the moulded line of the bottom shell at centreline not less than the vertical extent of damage specified in **203. 1** (2) (C) and nowhere less than d, where $d = 0.8m$ from the moulded line of outer shell (see **Fig 7.5.2** and **Fig 7.5.5**).

2. For the purpose of tank location, the vertical extent of bottom damage shall be measured to the inner bottom when membrane or semi-membrane tanks are used, otherwise to the bottom of the cargo tanks. The transverse extent of side damage shall be measured to the longitudinal bulkhead when membrane or semi-membrane tanks are used, otherwise to the side of the cargo tanks. The distances indicated in **203.** and **204.** shall be applied as in **Fig 7.5.1** (a) to (e). These distances shall be measured plate to plate, from the moulded line to the moulded line, excluding insulation.

3. Except for type 1G ships, suction wells installed in cargo tanks may protrude into the vertical extent of bottom damage specified in **203. 1** (2) (C) provided that such wells are as small as practicable and the protrusion below the inner bottom plating does not exceed 25% of the depth of the double bottom or 350 mm, whichever is less. Where there is no double bottom, the protrusion below the upper limit of bottom damage shall not exceed 350 mm. Suction wells installed in accordance with this paragraph may be ignored when determining the compartments affected by damage. **【See Guidance】**

4. Cargo tanks shall not be located forward of the collision bulkhead.

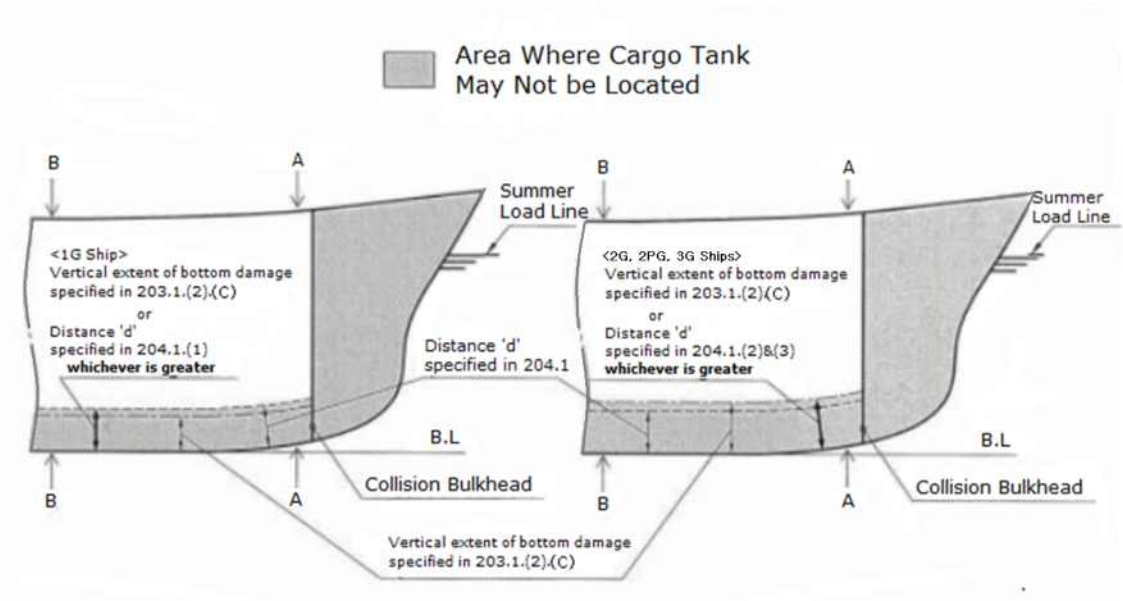

Fig 7.5.2 Cargo tank location requirements (Centerline Profile – Type 1G, 2G, 2PG and 3G Ship)

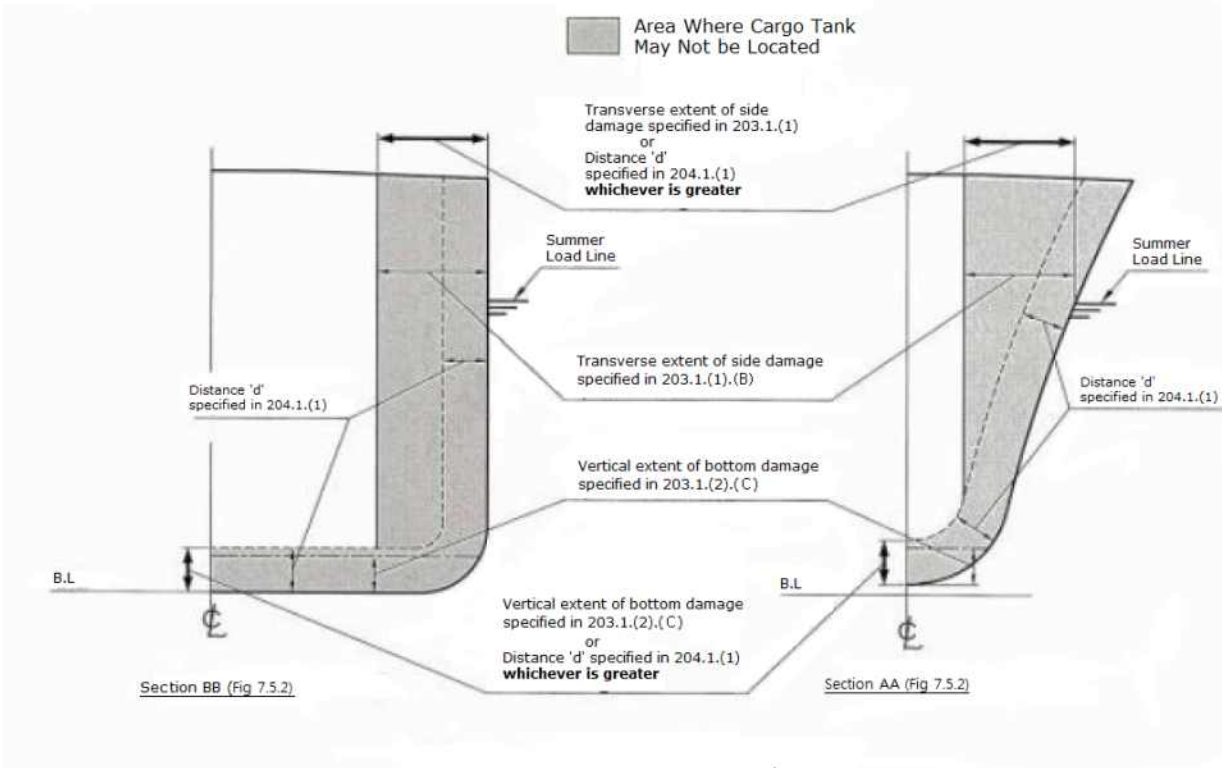

Fig 7.5.3 Cargo tank location requirements (Transverse Sections – Type 1G Ship)

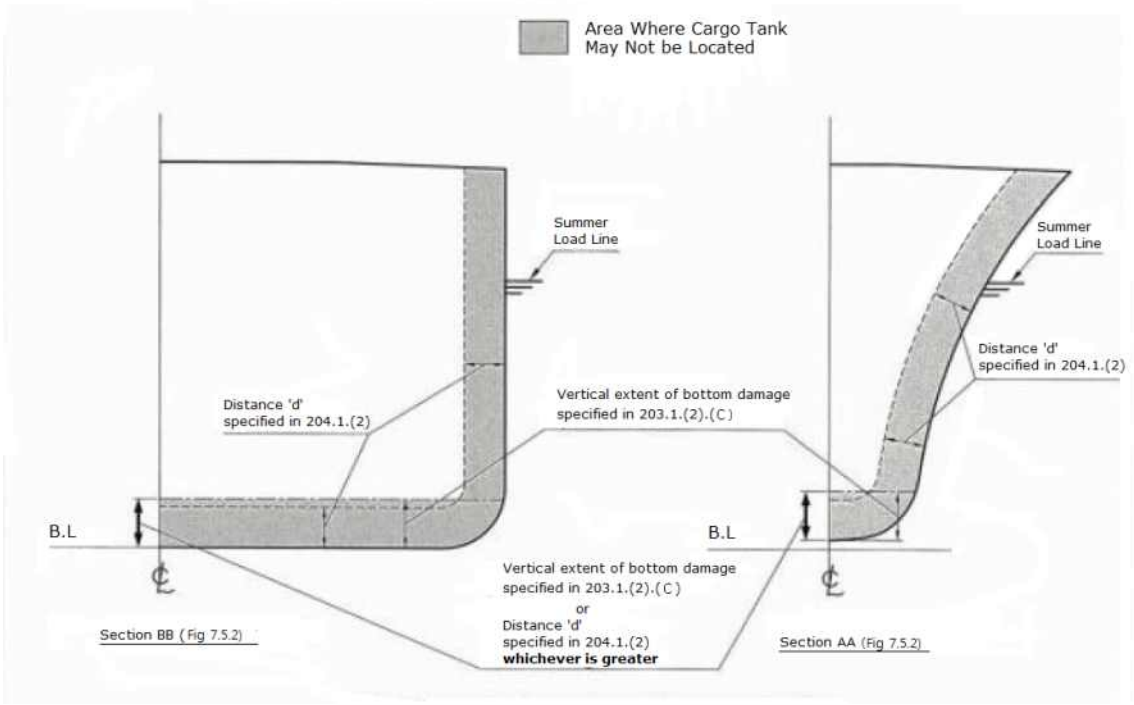

Fig 7.5.4 Cargo tank location requirements (Transverse Sections – Type 2G and 2PG Ship)

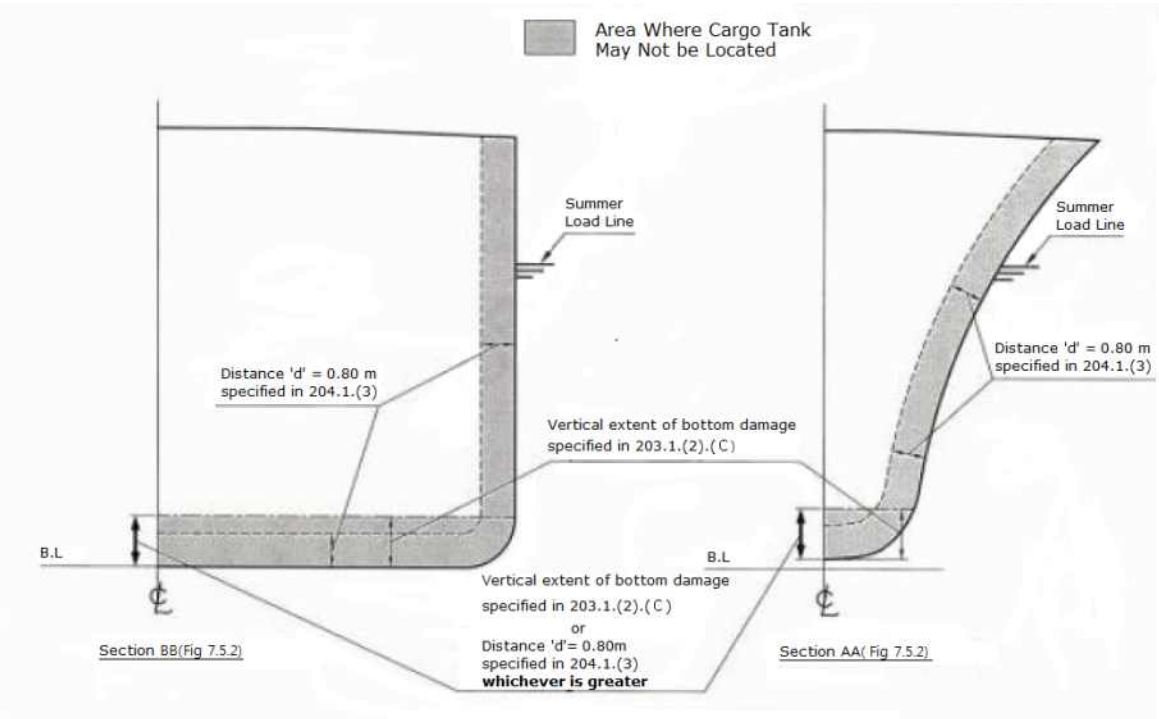

Fig 7.5.5 Cargo tank location requirements (Transverse Sections – Type 3G Ship)

205. Flood assumptions (IGC Code 2.5) 【See Guidance】

1. The requirements of **207.** shall be confirmed by calculations that take into consideration the design characteristics of the ship, the arrangements, configuration and contents of the damaged compartments, the distribution, relative densities and the free surface effects of liquids and the draught and trim for all conditions of loading.

2. The permeabilities of spaces assumed to be damaged shall be as follows:

Spaces	Permeabilities
Stores	0.6
Accommodation	0.95
Machinery	0.85
Voids	0.95
Hold spaces	0.95(1)
Consumable liquids	0 to 0.95(2)
Other liquids	0 to 0.95(2)

Note
(1) Other values of permeability can be considered based on the detailed calculations. Interpretations of regulation of part B-1 of SOLAS chapter II-1 (MSC/Circ.651) are referred.
(2) The permeability of partially filled compartments shall be consistent with the amount of liquid carried in the compartment.

3. Wherever damage penetrates a tank containing liquids, it should be assumed that the contents are completely lost from that compartment and replaced by salt water up to the level of the final plane of equilibrium.

4. Where the damage between transverse watertight bulkheads is envisaged, as specified in **206. 1** (4), (5), and (6), transverse bulkheads shall be spaced at least at a distance equal to the longitudinal extent of damage specified in **203. 1** (1) (A) in order to be considered effective. Where transverse bulkheads are spaced at a lesser distance, one or more of these bulkheads within such extent of damage shall be assumed as non-existent for the purpose of determining flooded compartments. Further, any portion of a transverse bulkhead bounding side compartments or double bottom compartments shall be assumed damaged if the watertight bulkhead boundaries are within the extent of vertical or horizontal penetration required by **203.** Also, any transverse bulkhead shall be assumed damaged if it contains a step or recess of more than 3 m in length located within the extent of penetration of assumed damage. The step formed by the after peak bulkhead and the after peak tank top shall not be regarded as a step for the purpose of this paragraph.

5. The ship should be so designed as to keep unsymmetrical flooding to the minimum consistent with efficient arrangements.

6. Equalization arrangements requiring mechanical aids such as valves or cross-levelling pipes, if fitted, shall not be considered for the purpose of reducing an angle of heel or attaining the minimum range of residual stability to meet the requirements of **207. 1**, and sufficient residual stability shall be maintained during all stages where equalization is used. Spaces linked by ducts of large cross-sectional area may be considered to be common.

7. If pipes, ducts, trunks or tunnels are situated within the assumed extent of damage penetration, as defined in **203.**, arrangements shall be such that progressive flooding cannot thereby extend to compartments other than those assumed to be flooded for each case of damage.

8. The buoyancy of any superstructure directly above the side damage shall be disregarded. However, the unflooded parts of superstructures beyond the extent of damage may be taken into consideration, provided that:

(1) they are separated from the damaged space by watertight divisions and the requirements of **207. 1** (1) in respect of these intact spaces are complied with; and
(2) openings in such divisions are capable of being closed by remotely operated sliding watertight doors and unprotected openings are not immersed within the minimum range of residual stability required in **207. 2** (1). However, the immersion of any other openings capable of being closed

weathertight may be permitted.

206. Standard of damage (IGC Code 2.6) 【See Guidance】

1. Ships shall be capable of surviving the damage indicated in **203.** with the flood assumptions in **205.**, to the extent determined by the ship's type, according to the following standards:

(1) A type 1G ship shall be assumed to sustain damage anywhere in its length;

(2) A type 2G ship of more than 150 m in length shall be assumed to sustain damage anywhere in its length;

(3) A type 2G ship of 150 m in length or less shall be assumed to sustain damage anywhere in its length, except involving either of the bulkheads bounding a machinery space located aft;

(4) A type 2PG ship shall be assumed to sustain damage anywhere in its length except involving transverse bulkheads spaced further apart than the longitudinal extent of damage as specified in **203. 1** (1) (A);

(5) A type 3G ship of 80 m in length or more shall be assumed to sustain damage anywhere in its length, except involving transverse bulkheads spaced further apart than the longitudinal extent of damage specified in **203. 1** (1) (A); and

(6) A type 3G ship less than 80 m in length shall be assumed to sustain damage anywhere in its length, except involving transverse bulkheads spaced further apart than the longitudinal extent of damage specified in **203. 1** (1) (A) and except damage involving the machinery space when located after.

2. In the case of small type 2G/2PG and 3G ships that do not comply in all respects with the appropriate requirements of **1** (3), (4) and (6), special dispensations may only be considered by the Society provided that alternative measures can be taken which maintain the same degree of safety. The nature of the alternative measures shall be approved and clearly stated and be available to the Port Administration. Any such dispensation shall be duly noted on the **IGC Certificate** referred to in **104. 4**.

207. Survival requirements (IGC Code 2.7) 【See Guidance】

Ships subject to this Chapter shall be capable of surviving the assumed damage specified in **203.**, to the standard provided in **206.**, in a condition of stable equilibrium and shall satisfy the following criteria.

1. In any stage of flooding: ***(2024)***

(1) the waterline, taking into account sinkage, heel and trim, should be below the lower edge of any opening through which progressive flooding or downflooding may take place. Such openings should include air pipes and openings that are closed by means of weathertight doors or hatch covers. But the opening that are closed by the following means may be excluded.

(A) watertight manhole covers and watertight flush scuttles,

(B) small watertight cargo tank hatch covers that maintain the high integrity of the deck,

(B) remotely operated sliding watertight doors,

(D) hinged watertight access doors with open/closed indication locally and at the navigation bridge of the quick-acting or single-action type that are normally closed at sea,

(E) hinged watertight doors that are permanently closed at sea, and

(F) sidescuttles of the non-opening type;

(2) the maximum angle of heel due to unsymmetrical flooding shall not exceed 30°; and

(3) the residual stability during intermediate stages of flooding shall not be less than that required by **2** (1).

2. At final equilibrium after flooding:

(1) the righting lever curve shall have a minimum range of 20° beyond the position of equilibrium in association with a maximum residual righting lever of at least 0.1 m within the 20° range; the area under the curve within this range shall not be less than 0.0175 m.rad. The 20° range may be measured from any angle commencing between the position of equilibrium and the angle of 25° (or 30° if no deck immersion occurs). Unprotected openings shall not be immersed within this range unless the space concerned is assumed to be flooded. Within this range, the immersion of any of the openings listed in **1** (1) and other openings capable of being closed weathertight may be permitted; and

(2) the emergency source of power shall be capable of operating.

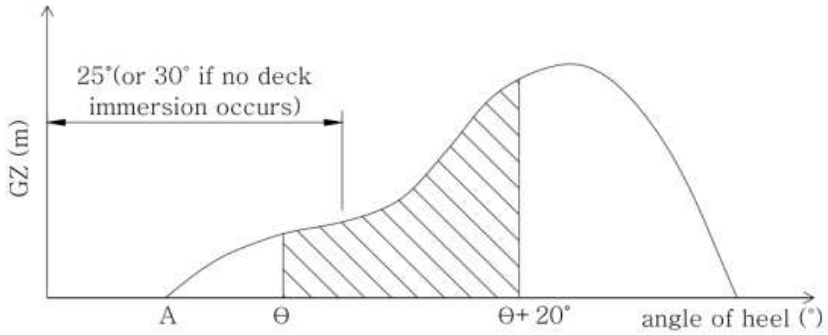

θ : Any angle commencing between the position of equilibrium(A)
and the angle of 25°(or 30° if no deck immersion occurs)

Fig 7.5.6

Section 3 Ship Arrangements

301. Segregation of the cargo area (IGC Code 3.1) 【See Guidance】

1. Hold spaces shall be segregated from machinery and boiler spaces, accommodation spaces, service spaces, control stations, chain lockers, domestic water tanks and from stores. Hold spaces shall be located forward of machinery spaces of category A. Alternative arrangements, including locating machinery spaces of category A forward, may be accepted, based on SOLAS regulation II-2/17, after further consideration of involved risks, including that of cargo release and the means of mitigation.

2. Where cargo is carried in a cargo containment system not requiring a complete or partial secondary barrier, segregation of hold spaces from spaces referred to in **1.** or spaces either below or outboard of the hold spaces may be effected by cofferdams, oil fuel tanks or a single gastight bulkhead of all-welded construction forming an "A-60" class division. A gastight "A-0" class division is acceptable if there is no source of ignition or fire hazard in the adjoining spaces.

3. Where cargo is carried in a cargo containment system requiring a complete or partial secondary barrier, segregation of hold spaces from spaces referred to in **1**, or spaces either below or outboard of the hold spaces that contain a source of ignition or fire hazard, shall be effected by cofferdams or oil fuel tanks. A gastight "A-0" class division is acceptable if there is no source of ignition or fire hazard in the adjoining spaces.

4. Turret compartments segregation from spaces referred to in **1**, or spaces either below or outboard of the turret compartment that contain a source of ignition or fire hazard, shall be effected by cofferdams or an A-60 class division. A gastight "A-0" class division is acceptable if there is no source of ignition or fire hazard in the adjoining spaces.

5. In addition, the risk of fire propagation from turret compartments to adjacent spaces shall be evaluated by a risk analysis (see **101. 7**) and further preventive measures, such as the arrangement of a cofferdam around the turret compartment, shall be provided if needed.

6. When cargo is carried in a cargo containment system requiring a complete or partial secondary barrier:

(1) at temperatures below −10°C, hold spaces shall be segregated from the sea by a double bottom; and

(2) at temperatures below −55°C, the ship shall also have a longitudinal bulkhead forming side tanks.

7. Arrangements shall be made for sealing the weather decks in way of openings for cargo containment systems.

302. Accommodation, service and machinery spaces and control stations (IGC Code 3.2) 【See Guidance】

1. No accommodation space, service space or control station shall be located within the cargo area. The bulkhead of accommodation spaces, service spaces or control stations that face the cargo area shall be so located as to avoid the entry of gas from the hold space to such spaces through a single failure of a deck or bulkhead on a ship having a containment system requiring a secondary barrier.

2. To guard against the danger of hazardous vapours, due consideration shall be given to the location of air intakes/outlets and openings into accommodation, service and machinery spaces and control stations in relation to cargo piping, cargo vent systems and machinery space exhausts from gas burning arrangements.

3. Access through doors, gastight or otherwise, shall not be permitted from a non-hazardous area to a hazardous area except for access to service spaces forward of the cargo area through airlocks, as permitted by **306. 1**, when accommodation spaces are aft.

4. (1) Entrances, air inlets and openings to accommodation spaces, service spaces, machinery spaces and control stations shall not face the cargo area. They shall be located on the end bulkhead not facing the cargo area or on the outboard side of the superstructure or deckhouse or on both at a distance of at least 4 % of the length (L) of the ship but not less than 3 m from the end of the superstructure or deckhouse facing the cargo area. This distance, however, need not exceed 5 m.

(2) Windows and sidescuttles facing the cargo area and on the sides of the superstructures or deckhouses within the distance mentioned above shall be of the fixed (non-opening) type. Wheelhouse windows may be non-fixed and wheelhouse doors may be located within the above limits so long as they are designed in a manner that a rapid and efficient gas and vapour tightening of the wheelhouse can be ensured.

(3) For ships dedicated to the carriage of cargoes that have neither flammable nor toxic hazards, the Society may approve relaxations from the above requirements.

(4) Accesses to forecastle spaces containing sources of ignition may be permitted through a single door facing the cargo area, provided the doors are located outside hazardous areas as defined in **Sec 10**.

5. Windows and sidescuttles facing the cargo area and on the sides of the superstructures and deckhouses within the limits specified in **4** (1), except wheelhouse windows, shall be constructed to "A-60" class. Sidescuttles in the shell below the uppermost continuous deck and in the first tier of the superstructure or deckhouse shall be of fixed (non-opening) type. *(2019)*

6. All air intakes, outlets and other openings into the accommodation spaces, service spaces and control stations shall be fitted with closing devices. When carrying toxic products, they shall be capable of being operated from inside the space. The requirement for fitting air intakes and openings with closing devices operated from inside the space for toxic products need not apply to spaces not normally manned, such as deck stores, forecastle stores, workshops. In addition, the requirement does not apply to cargo control rooms located within the cargo area.

7. Control rooms and machinery spaces of turret systems may be located in the cargo area forward or aft of cargo tanks in ships with such installations. Access to such spaces containing sources of ignition may be permitted through doors facing the cargo area, provided the doors are located outside hazardous areas or access is through airlocks.

303. Cargo machinery spaces and turret compartments (IGC Code 3.3) 【See Guidance】

1. Cargo machinery spaces shall be situated above the weather deck and located within the cargo area. Cargo machinery spaces and turret compartments shall be treated as cargo pump-rooms for the purpose of fire protection according to SOLAS regulation II-2/9.2.4, and for the purpose of prevention of potential explosion according to SOLAS regulation II-2/4.5.10.

2. When cargo machinery spaces are located at the after end of the aftermost hold space or at the forward end of the foremost hold space, the limits of the cargo area, as defined in **105. 6**, shall be extended to include the cargo machinery spaces for the full breadth and depth of the ship and the deck areas above those spaces.

3. Where the limits of the cargo area are extended by **2**, the bulkhead that separates the cargo machinery spaces from accommodation and service spaces, control stations and machinery spaces of category A shall be located so as to avoid the entry of gas to these spaces through a single failure of a deck or bulkhead.

4. Cargo compressors and cargo pumps may be driven by electric motors in an adjacent non-hazardous space separated by a bulkhead or deck, if the seal around the bulkhead penetration ensures effective gastight segregation of the two spaces. Alternatively, such equipment may be driven by certified safe electric motors adjacent to them if the electrical installation complies with the requirements of **Sec 10.**

5. Arrangements of cargo machinery spaces and turret compartments shall ensure safe unrestricted access for personnel wearing protective clothing and breathing apparatus, and in the event of injury to allow unconscious personnel to be removed. At least two widely separated escape routes and doors shall be provided in cargo machinery spaces, except that a single escape route may be accepted where the maximum travel distance to the door is 5 m or less.

6. All valves necessary for cargo handling shall be readily accessible to personnel wearing protective clothing. Suitable arrangements shall be made to deal with drainage of pump and compressor rooms.

7. Turret compartments shall be designed to retain their structural integrity in case of explosion or uncontrolled high-pressure gas release (overpressure and/or brittle fracture), the characteristics of which shall be substantiated on the basis of a risk analysis with due consideration of the capabilities

of the pressure relieving devices.

304. Cargo control rooms (IGC Code 3.4) 【See Guidance】

1. Any cargo control room shall be above the weather deck and may be located in the cargo area. The cargo control room may be located within the accommodation spaces, service spaces or control stations, provided the following conditions are complied with:
   (1) the cargo control room is a non-hazardous area;
   (2) if the entrance complies with **302. 4** (1), the control room may have access to the spaces described above; and
   (3) if the entrance does not comply with **302. 4** (1), the cargo control room shall have no access to the spaces described above and the boundaries for such spaces shall be insulated to "A-60" class.
2. If the cargo control room is designed to be a non-hazardous area, instrumentation shall, as far as possible, be by indirect reading systems and shall, in any case, be designed to prevent any escape of gas into the atmosphere of that space. Location of the gas detection system within the cargo control room will not cause the room to be classified as a hazardous area, if installed in accordance with **1306. 11**
3. If the cargo control room for ships carrying flammable cargoes is classified as a hazardous area, sources of ignition shall be excluded and any electrical equipment shall be installed in accordance with **Sec 10**.

305. Access to spaces in the cargo area (IGC Code 3.5) 【See Guidance】

1. Visual inspection of at least one side of the inner hull structure shall be possible without the removal of any fixed structure or fitting. If such a visual inspection, whether combined with those inspections required in **2**, **406. 2** (4) or **420. 3** (7) or not, is only possible at the outer face of the inner hull, the inner hull shall not be a fuel-oil tank boundary wall.
2. Inspection of one side of any insulation in hold spaces shall be possible. If the integrity of the insulation system can be verified by inspection of the outside of the hold space boundary when tanks are at service temperature, inspection of one side of the insulation in the hold space need not be required.
3. Arrangements for hold spaces, void spaces, cargo tanks and other spaces classified as hazardous areas, shall be such as to allow entry and inspection of any such space by personnel wearing protective clothing and breathing apparatus and shall also allow for the evacuation of injured and/or unconscious personnel. Such arrangements shall comply with the following:
   (1) Access shall be provided as follows:
      (A) access to all cargo tanks. Access shall be direct from the weather deck;
      (B) access through horizontal openings, hatches or manholes. The dimensions shall be sufficient to allow a person wearing a breathing apparatus to ascend or descend any ladder without obstruction, and also to provide a clear opening to facilitate the hoisting of an injured person from the bottom of the space. The minimum clear opening shall be not less than 600 mm x 600 mm;
      (C) access through vertical openings or manholes providing passage through the length and breadth of the space. The minimum clear opening shall be not less than 600 mm x 800 mm at a height of not more than 600 mm from the bottom plating unless gratings or other footholds are provided; and
      (D) circular access openings to type C tanks shall have a diameter of not less than 600 mm.
   (2) The dimensions referred to in (1) (B) and (C) may be decreased, if the requirements of **305. 3** can be met to the satisfaction of the Society.
   (3) Where cargo is carried in a containment system requiring a secondary barrier, the requirements of (1) (B) and (C) do not apply to spaces separated from a hold space by a single gastight steel boundary. Such spaces shall be provided only with direct or indirect access from the weather deck, not including any enclosed non-hazardous area.
   (4) Access required for inspection shall be a designated access through structures below and above cargo tanks, which shall have at least the cross-sections as required by (1) (C)
   (5) For the purpose of **1** or **2**, the following shall apply:

(A) where it is required to pass between the surface to be inspected, flat or curved, and structures such as deck beams, stiffeners, frames, girders, etc., the distance between that surface and the free edge of the structural elements shall be at least 380 mm. The distance between the surface to be inspected and the surface to which the above structural elements are fitted, e.g. deck, bulkhead or shell, shall be at least 450 mm for a curved tank surface (e.g. for a type C tank), or 600 mm for a flat tank surface (e.g. for a type A tank) (see **Fig 7.5.7**);

(B) where it is not required to pass between the surface to be inspected and any part of the structure, for visibility reasons the distance between the free edge of that structural element and the surface to be inspected shall be at least 50 mm or half the breadth of the structure's face plate, whichever is the larger (see **Fig 7.5.8**);

(C) if for inspection of a curved surface where it is required to pass between that surface and another surface, flat or curved, to which no structural elements are fitted, the distance between both surfaces shall be at least 380 mm (see **Fig 7.5.9**). Where it is not required to pass between that curved surface and another surface, a smaller distance than 380 mm may be accepted taking into account the shape of the curved surface;

(D) if for inspection of an approximately flat surface where it is required to pass between two approximately flat and approximately parallel surfaces, to which no structural elements are fitted, the distance between those surfaces shall be at least 600 mm. Where fixed access ladders are fitted, a clearance of at least 450 mm shall be provided for access (see **Fig 7.5.10**);

(E) the minimum distances between a cargo tank sump and adjacent double bottom structure in way of a suction well shall not be less than those shown in **Fig 7.5.11** (**Fig 7.5.11** shows that the distance between the plane surfaces of the sump and the well is a minimum of 150 mm and that the clearance between the edge between the inner bottom plate, and the vertical side of the well and the knuckle point between the spherical or circular surface and sump of the tank is at least 380 mm). If there is no suction well, the distance between the cargo tank sump and the inner bottom shall not be less than 50 mm;

(F) the distance between a cargo tank dome and deck structures shall not be less than 150 mm (see **Fig 7.5.12**);

(G) fixed or portable staging shall be installed as necessary for inspection of cargo tanks, cargo tank supports and restraints (e.g. anti-pitching, anti-rolling and anti-flotation chocks), cargo tank insulation etc. This staging shall not impair the clearances specified in (A) to (D); and

(H) if fixed or portable ventilation ducting shall be fitted in compliance with **1201. 2**, such ducting shall not impair the distances required under (A) to (D).

4. Access from the open weather deck to non-hazardous areas shall be located outside the hazardous areas as defined in **Sec 10**, unless the access is by means of an airlock in accordance with **306.**

5. Turret compartments shall be arranged with two independent means of access/egress.

6. Access from a hazardous area below the weather deck to a non-hazardous area is not permitted.

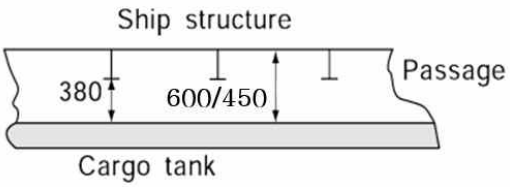

Fig 7.5.7

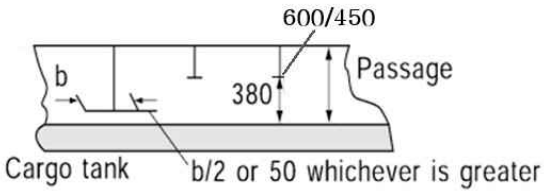

Fig 7.5.8

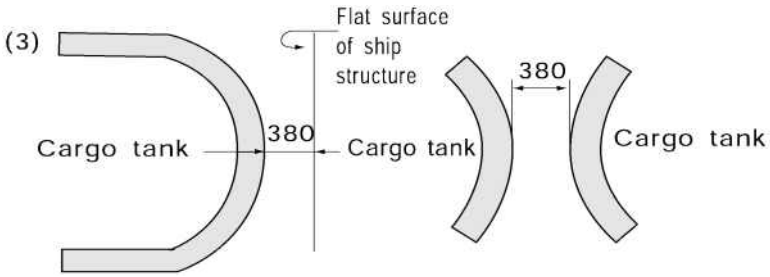

Fig 7.5.9

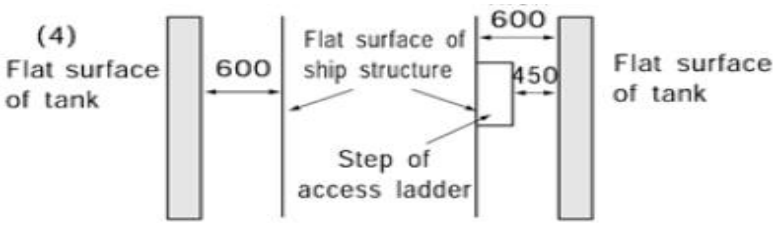

Fig 7.5.10

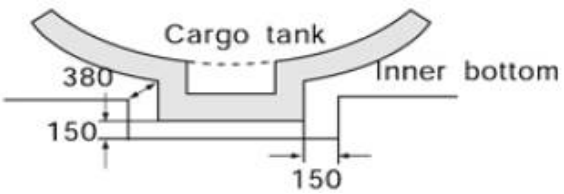

Fig 7.5.11

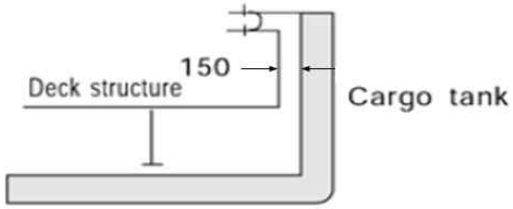

Fig 7.5.12

306. Air locks (IGC Code 3.6) 【See Guidance】

1. Access between hazardous area on the open weather deck and non-hazardous spaces shall be by means of an airlock. This shall consist of two self-closing, substantially gastight, steel doors without any holding back arrangements, capable of maintaining the overpressure, at least 1.5 m but no more than 2.5 m apart. The airlock space shall be artificially ventilated from a non-hazardous area and maintained at an overpressure to the hazardous area on the weather deck.

2. Where spaces are protected by pressurization, the ventilation shall be designed and installed in accordance with the Society's guidances.

3. An audible and visible alarm system to give a warning on both sides of the airlock shall be provided. The visible alarm shall indicate if one door is open. The audible alarm shall sound if doors on both sides of the air lock are moved from the closed positions.

4. In ships carrying flammable products, electrical equipment that is located in spaces protected by airlocks and not of the certified safe type, shall be de-energized in case of loss of overpressure in the space.

5. Electrical equipment for manoeuvring, anchoring and mooring, as well as emergency fire pumps that are located in spaces protected by airlocks, shall be of a certified safe type.

6. The airlock space shall be monitored for cargo vapours (see **1306. 2**).

7. Subject to the requirements of the International Convention on Load Lines in force, the door sill shall not be less than 300 mm in height.

307. Bilge, ballast and fuel oil arrangements (IGC Code 3.7) 【See Guidance】

1. Where cargo is carried in a cargo containment system not requiring a secondary barrier, suitable drainage arrangements for the hold spaces that are not connected with the machinery space shall be provided. Means of detecting any leakage shall be provided.

2. Where there is a secondary barrier, suitable drainage arrangements for dealing with any leakage into the hold or insulation spaces through the adjacent ship structure shall be provided. The suction shall not lead to pumps inside the machinery space. Means of detecting such leakage shall be provided.

3. The hold or interbarrier spaces of type A independent tank ships shall be provided with a drainage system suitable for handling liquid cargo in the event of cargo tank leakage or rupture. Such arrangements shall provide for the return of any cargo leakage to the liquid cargo piping.

4. Arrangements referred to in **3** shall be provided with a removable spool piece.

5. Ballast spaces, including wet duct keels used as ballast piping, oil fuel tanks and non-hazardous spaces, may be connected to pumps in the machinery spaces. Dry duct keels with ballast piping passing through may be connected to pumps in the machinery spaces, provided the connections are led directly to the pumps, and the discharge from the pumps is led directly overboard with no valves or manifolds in either line that could connect the line from the duct keel to lines serving non-hazardous spaces. Pump vents shall not be open to machinery spaces.

308. Bow and stern loading and unloading arrangements (IGC Code 3.8)

1. Subject to the requirements in **308.** and **Sec.5**, cargo piping may be arranged to permit bow or stern loading and unloading.

2. Bow or stern loading and unloading lines that are led past accommodation spaces, service spaces or control stations shall not be used for the transfer of products requiring a type 1G ship. Bow or stern loading and unloading lines shall not be used for the transfer of toxic products as specified in **102. 51**, where the design pressure is above 2.5 MPa.

3. Portable arrangements shall not be permitted.

4. (1) Entrances, air inlets and openings to accommodation spaces, service spaces, machinery spaces and controls stations, shall not face the cargo shore connection location of bow or stern loading and unloading arrangements. They shall be located on the outboard side of the superstructure or deckhouse at a distance of at least 4% of the length of the ship, but not less than 3 m from

the end of the superstructure or deckhouse facing the cargo shore connection location of the bow or stern loading and unloading arrangements. This distance need not exceed 5 m.

(2) Windows and sidescuttles facing the shore connection location and on the sides of the superstructure or deckhouse within the distance mentioned above shall be of the fixed (non-opening) type. **【See Guidance】**

(3) In addition, during the use of the bow or stern loading and unloading arrangements, all doors, ports and other openings on the corresponding superstructure or deckhouse side shall be kept closed.

(4) Where, in the case of small ships, compliance with **302. 4** (1) to **302. 4** (4) and **308. 4** (1) to **308. 4** (3) is not possible, the Society may approve relaxations from the above requirements.

5. Deck openings and air inlets to spaces within distances of 10 m from the cargo shore connection location shall be kept closed during the use of bow or stern loading or unloading arrangements.

6. Firefighting arrangements for the bow or stern loading and unloading areas shall be in accordance with **1103. 1** (4) and **1104. 6**.

7. Means of communication between the cargo control station and the shore connection location shall be provided and, where applicable, certified for use in hazardous areas.

Section 4 Cargo Containment

401. Definitions (IGC Code 4.1)

1. A cold spot is a part of the hull or thermal insulation surface where a localized temperature decrease occurs with respect to the allowable minimum temperature of the hull or of its adjacent hull structure, or to design capabilities of cargo pressure/temperature control systems required in **Sec 7**.

2. Design vapour pressure P_0 is the maximum gauge pressure, at the top of the tank, to be used in the design of the tank.

3. Design temperature for selection of materials is the minimum temperature at which cargo may be loaded or transported in the cargo tanks.

4. Independent tanks are self-supporting tanks. They do not form part of the ship's hull and are not essential to the hull strength. There are three categories of independent tank, which are referred to in **421, 422** and **423.**

5. Membrane tanks are non-self-supporting tanks that consist of a thin liquid and gastight layer (membrane) supported through insulation by the adjacent hull structure. Membrane tanks are covered in **424.**

6. Integral tanks are tanks that form a structural part of the hull and are influenced in the same manner by the loads that stress the adjacent hull structure. Integral tanks are covered in **425.**

7. Semi-membrane tanks are non-self-supporting tanks in the loaded condition and consist of a layer, parts of which are supported through insulation by the adjacent hull structure. Semi-membrane tanks are covered in **426.**

8. In addition to the definitions in **102.**, the definitions given in this Section shall apply throughout the Chapter.

402. Application (IGC Code 4.2)

Unless otherwise specified in **421.** to **426**, the requirements of **403.** to **420.** shall apply to all types of tanks, including those covered in **427.**

403. Functional requirements (IGC Code 4.3) 【See Guidance】

1. The design life of the cargo containment system shall not be less than the design life of the ship.

2. Cargo containment systems shall be designed for North Atlantic environmental conditions and relevant long-term sea state scatter diagrams for unrestricted navigation. Lesser environmental conditions, consistent with the expected usage, may be accepted by the Society for cargo containment systems used exclusively for restricted navigation. Greater environmental conditions may be required for cargo containment systems operated in conditions more severe than the North Atlantic environment.

3. Cargo containment systems shall be designed with suitable safety margins: (For safety margins, please refer to **Annex 7A-8 「Guidelines for Safety Containment of Cargo Containment Facilities」**) *(2021)* 【See Guidance】
   (1) to withstand, in the intact condition, the environmental conditions anticipated for the cargo containment system's design life and the loading conditions appropriate for them, which include full homogeneous and partial load conditions, partial filling within defined limits and ballast voyage loads; and
   (2) being appropriate for uncertainties in loads, structural modelling, fatigue, corrosion, thermal effects, material variability, ageing and construction tolerances.

4. The cargo containment system structural strength shall be assessed against failure modes, including but not limited to plastic deformation, buckling and fatigue. The specific design conditions which shall be considered for the design of each cargo containment system are given in **421.** to **426.** There are three main categories of design conditions:
   (1) Ultimate design conditions - the cargo containment system structure and its structural compo-

nents shall withstand loads liable to occur during its construction, testing and anticipated use in service, without loss of structural integrity. The design shall take into account proper combinations of the following loads:
(A) internal pressure;
(B) external pressure;
(C) dynamic loads due to the motion of the ship;
(D) thermal loads;
(E) sloshing loads;
(F) loads corresponding to ship deflections;
(G) tank and cargo weight with the corresponding reaction in way of supports;
(H) insulation weight;
(I) loads in way of towers and other attachments; and
(J) test loads.

(2) Fatigue design conditions - the cargo containment system structure and its structural components shall not fail under accumulated cyclic loading.

(3) The cargo containment system shall meet the following criteria:
(A) Collision - the cargo containment system shall be protectively located in accordance with **204. 1** and withstand the collision loads specified in **415. 1** without deformation of the supports, or the tank structure in way of the supports, likely to endanger the tank structure.
(B) Fire - the cargo containment systems shall sustain, without rupture, the rise in internal pressure specified in **804. 1** under the fire scenarios envisaged therein.
(C) Flooded compartment causing buoyancy on tank - the anti-flotation arrangements shall sustain the upward force, specified in **415. 2**, and there shall be no endangering plastic deformation to the hull.

5. Measures shall be applied to ensure that scantlings required meet the structural strength provisions and be maintained throughout the design life. Measures may include, but are not limited to, material selection, coatings, corrosion additions, cathodic protection and inerting. Corrosion allowance need not be required in addition to the thickness resulting from the structural analysis. However, where there is no environmental control, such as inerting around the cargo tank, or where the cargo is of a corrosive nature, the Society may require a suitable corrosion allowance.

6. An inspection/survey plan for the cargo containment system shall be developed and approved by the Society. The inspection/survey plan shall identify areas that need inspection during surveys throughout the cargo containment system's life and, in particular, all necessary in-service survey and maintenance that was assumed when selecting cargo containment system design parameters. Cargo containment systems shall be designed, constructed and equipped to provide adequate means of access to areas that need inspection as specified in the inspection/survey plan. Cargo containment systems, including all associated internal equipment, shall be designed and built to ensure safety during operations, inspection and maintenance (see **305.**).

404. Cargo containment safety principles (IGC Code 4.4)

1. The containment systems shall be provided with a full secondary liquid-tight barrier capable of safely containing all potential leakages through the primary barrier and, in conjunction with the thermal insulation system, of preventing lowering of the temperature of the ship structure to an unsafe level.

2. However, the size and configuration or arrangement of the secondary barrier may be reduced where an equivalent level of safety is demonstrated in accordance with the requirements of **3** to **5**, as applicable.

3. Cargo containment systems for which the probability for structural failures to develop into a critical state has been determined to be extremely low, but where the possibility of leakages through the primary barrier cannot be excluded, shall be equipped with a partial secondary barrier and small leak protection system capable of safely handling and disposing of the leakages. The arrangements shall comply with the following requirements:

(1) failure developments that can be reliably detected before reaching a critical state (e.g. by gas detection or inspection) shall have a sufficiently long development time for remedial actions to be taken; and

(2) failure developments that cannot be safely detected before reaching a critical state shall have a predicted development time that is much longer than the expected lifetime of the tank.

4. No secondary barrier is required for cargo containment systems, e.g. type C independent tanks, where the probability for structural failures and leakages through the primary barrier is extremely low and can be neglected.

5. No secondary barrier is required where the cargo temperature at atmospheric pressure is at or above −10°C.

405. Secondary barriers in relation to tank types (IGC Code 4.5) 【See Guidance】

Secondary barriers in relation to the tank types defined in **421.** to **426.** shall be provided in accordance with the following **Table 7.5.1** .

Table 7.5.1 Secondary Barriers in Relation to Tank Types

Cargo temperature at atmospheric pressure	−10°C and above	Below −10°C down to −55°C	Below −55°C
Basic tank type	No secondary barrier required	Hull may act as secondary barrier	Separate secondary barrier where required
Integral		Tank type not normally allowed(1)	
Membrane		Complete secondary barrier	
Semi-membrane		Complete secondary barrier(2)	
Independent:			
Type A		Complete secondary barrier	
Type B		Partial secondary barrier	
Type C		No secondary barrier required	

Notes:
(1) A complete secondary barrier shall normally be required if cargoes with a temperature at atmospheric pressure below −10°C are permitted in accordance with **425. 1**.
(2) In the case of semi-membrane tanks that comply in all respects with the requirements applicable to type B independent tanks, except for the manner of support, the Society may, after special consideration, accept a partial secondary barrier.

406. Design of secondary barriers (IGC Code 4.6) 【See Guidance】

1. Where the cargo temperature at atmospheric pressure is not below −55°C, the hull structure may act as a secondary barrier based on the following:
(1) the hull material shall be suitable for the cargo temperature at atmospheric pressure as required by **419. 1** (4); and
(2) the design shall be such that this temperature will not result in unacceptable hull stresses.

2. The design of the secondary barrier shall be such that:
(1) it is capable of containing any envisaged leakage of liquid cargo for a period of 15 days, unless different criteria apply for particular voyages, taking into account the load spectrum referred to in **418. 2** (6);
(2) physical, mechanical, or operational events within the cargo tank that could cause failure of the primary barrier shall not impair the due function of the secondary barrier, or vice versa;
(3) failure of a support or an attachment to the hull structure will not lead to loss of liquid tightness of both the primary and secondary barriers;
(4) it is capable of being periodically checked for its effectiveness by means acceptable to the Society. This may be by means of a visual inspection or a pressure/vacuum test or other suitable means carried out according to a documented procedure agreed with the Society;
(5) the methods required in (4) above shall be approved by this Society and shall include, where applicable to the test procedure:
(A) details on the size of defect acceptable and the location within the secondary barrier, before its liquid-tight effectiveness is compromised;
(B) accuracy and range of values of the proposed method for detecting defects in (A) above;

(C) scaling factors to be used in determining the acceptance criteria, if full scale model testing is not undertaken; and
(D) effects of thermal and mechanical cyclic loading on the effectiveness of the proposed test; and *(2018)*

(6) the secondary barrier shall fulfil its functional requirements at a static angle of heel of 30°. *(2018)*

407. Partial secondary barriers and primary barrier small leak protection system (IGC Code 4.7) 【See Guidance】

1. Partial secondary barriers as permitted in **404. 3** shall be used with a small leak protection system and meet all the requirements in **406. 2** The small leak protection system shall include means to detect a leak in the primary barrier, provision such as a spray shield to deflect any liquid cargo down into the partial secondary barrier, and means to dispose of the liquid, which may be by natural evaporation.

2. The capacity of the partial secondary barrier shall be determined, based on the cargo leakage corresponding to the extent of failure resulting from the load spectrum referred to in **418. 2** (6), after the initial detection of a primary leak. Due account may be taken of liquid evaporation, rate of leakage, pumping capacity and other relevant factors.

3. The required liquid leakage detection may be by means of liquid sensors, or by an effective use of pressure, temperature or gas detection systems, or any combination thereof.

408. Supporting arrangements (IGC Code 4.8)

1. The cargo tanks shall be supported by the hull in a manner that prevents bodily movement of the tank under the static and dynamic loads defined in **412.** to **415.**, where applicable, while allowing contraction and expansion of the tank under temperature variations and hull deflections without undue stressing of the tank and the hull.

2. Anti-flotation arrangements shall be provided for independent tanks and capable of withstanding the loads defined in **415. 2** without plastic deformation likely to endanger the hull structure.

3. Supports and supporting arrangements shall withstand the loads defined in **413. 9** and **415.**, but these loads need not be combined with each other or with wave-induced loads.

409. Associated structure and equipment (IGC Code 4.9)

Cargo containment systems shall be designed for the loads imposed by associated structure and equipment. This includes pump towers, cargo domes, cargo pumps and piping, stripping pumps and piping, nitrogen piping, access hatches, ladders, piping penetrations, liquid level gauges, independent level alarm gauges, spray nozzles, and instrumentation systems (such as pressure, temperature and strain gauges).

410. Thermal insulation (IGC Code 4.10) 【See Guidance】

1. Thermal insulation shall be provided, as required, to protect the hull from temperatures below those allowable (see **419. 1**) and limit the heat flux into the tank to the levels that can be maintained by the pressure and temperature control system applied in **Sec 7**.

2. In determining the insulation performance, due regard shall be given to the amount of the acceptable boil-off in association with the reliquefaction plant on board, main propulsion machinery or other temperature control system.

411. Design load – General (IGC Code 4.11)

This section defines the design loads to be considered with regard to the requirements in **416.**, **417.** and **418.**. This includes:

1. load categories (permanent, functional, environmental and accidental) and the description of the loads;

2. the extent to which these loads shall be considered depending on the type of tank, and is more fully detailed in the following Articles **412.**, to **415.** and

3. tanks, together with their supporting structure and other fixtures, that shall be designed taking into account relevant combinations of the loads described below.

412. Permanent loads (IGC Code 4.12)

1. Gravity loads

   The weight of tank, thermal insulation, loads caused by towers and other attachments shall be considered.

2. Permanent external loads

   Gravity loads of structures and equipment acting externally on the tank shall be considered.

413. Functional loads (IGC Code 4.13)

1. Loads arising from the operational use of the tank system shall be classified as functional loads. All functional loads that are essential for ensuring the integrity of the tank system, during all design conditions, shall be considered. As a minimum, the effects from the following criteria, as applicable, shall be considered when establishing functional loads:
   (1) internal pressure;
   (2) external pressure;
   (3) thermally induced loads;
   (4) vibration;
   (5) interaction loads;
   (6) loads associated with construction and installation;
   (7) test loads;
   (8) static heel loads; and
   (9) weight of cargo.

2. **Internal pressure**
   (1) In all cases, including (2), P_0 shall not be less than MARVS.
   (2) For cargo tanks, where there is no temperature control and where the pressure of the cargo is dictated only by the ambient temperature, P_0 shall not be less than the gauge vapour pressure of the cargo at a temperature of 45°C except as follows:
      (A) lower values of ambient temperature may be accepted by the Society for ships operating in restricted areas. Conversely, higher values of ambient temperature may be required; and
      (B) for ships on voyages of restricted duration, P_0 may be calculated based on the actual pressure rise during the voyage, and account may be taken of any thermal insulation of the tank.
   (3) Subject to special consideration by this Society and to the limitations given in **421.** to **426.**, for the various tank types, a vapour pressure P_h higher than P_0 may be accepted for site specific conditions (harbour or other locations), where dynamic loads are reduced. Any relief valve setting resulting from this paragraph shall be recorded in the **IGC Certificate**.
   (4) The internal pressure P_{eq} results from the vapour pressure P_0 or P_h plus the maximum associated dynamic liquid pressure P_{gd}, but not including the effects of liquid sloshing loads. Guidance formulae for associated dynamic liquid pressure P_{gd} are given in **428. 1**.

3. **External pressure**

   External design pressure loads shall be based on the difference between the minimum internal pressure and the maximum external pressure to which any portion of the tank may be simultaneously subjected.

4. **Thermally induced loads** 【See Guidance】
   (1) Transient thermally induced loads during cooling down periods shall be considered for tanks intended for cargo temperatures below −55°C.
   (2) Stationary thermally induced loads shall be considered for cargo containment systems where the design supporting arrangements or attachments and operating temperature may give rise to significant thermal stresses (see **702.**).

5. Vibration

The potentially damaging effects of vibration on the cargo containment system shall be considered.

6. Interaction loads

The static component of loads resulting from interaction between cargo containment system and the hull structure, as well as loads from associated structure and equipment, shall be considered.

7. Loads associated with construction and installation

Loads or conditions associated with construction and installation, e.g. lifting, shall be considered.

8. Test loads

Account shall be taken of the loads corresponding to the testing of the cargo containment system referred to in **421.** to **426.**

9. Static heel loads 【See Guidance】

Loads corresponding to the most unfavourable static heel angle within the range 0° to 30° shall be considered.

10. Other loads

Any other loads not specifically addressed, which could have an effect on the cargo containment system, shall be taken into account.

414. Environmental loads (IGC Code 4.14)

Environmental loads are defined as those loads on the cargo containment system that are caused by the surrounding environment and that are not otherwise classified as a permanent, functional or accidental load.

1. Loads due to ship motion

(1) The determination of dynamic loads shall take into account the long-term distribution of ship motion in irregular seas, which the ship will experience during its operating life. Account may be taken of the reduction in dynamic loads due to necessa ry speed reduction and variation of heading.

(2) The ship's motion shall include surge, sway, heave, roll, pitch and yaw. The accelerations acting on tanks shall be estimated at their centre of gravity and include the following components:

(A) vertical acceleration: motion accelerations of heave, pitch and, possibly, roll (normal to the ship base);

(B) transverse acceleration: motion accelerations of sway, yaw and roll and gravity component of roll; and

(C) longitudinal acceleration: motion accelerations of surge and pitch and gravity component of pitch.

(3) Methods to predict accelerations due to ship motion shall be proposed and approved by this Society.

(4) Guidance formulae for acceleration components are given in **428. 2**.

(5) Ships for restricted service may be given special consideration.

2. Dynamic interaction loads

Account shall be taken of the dynamic component of loads resulting from interaction between cargo containment systems and the hull structure, including loads from associated structures and equipment.

3. Sloshing loads 【See Guidance】

(1) The sloshing loads on a cargo containment system and internal components shall be evaluated based on allowable filling levels.

(2) When significant sloshing-induced loads are expected to be present, special tests and calculations shall be required covering the full range of intended filling levels.

4. Snow and ice loads

Snow and icing shall be considered, if relevant.

5. Loads due to navigation in ice

Loads due to navigation in ice shall be considered for vessels intended for such service.

415. Accidental loads (IGC Code 4.15)

Accidental loads are defined as loads that are imposed on a cargo containment system and its supporting arrangements under abnormal and unplanned conditions.

1. Collision loads

The collision load shall be determined based on the cargo containment system under fully loaded condition with an inertial force corresponding to 0.5 g in the forward direction and 0.25 g in the aft direction, where "g" is gravitational acceleration.

2. Loads due to flooding on ship

For independent tanks, loads caused by the buoyancy of an empty tank in a hold space flooded to the summer load draught shall be considered in the design of the anti-flotation chocks and the supporting hull structure.

416. Structural integrity-General (IGC Code 4.16)

1. The structural design shall ensure that tanks have an adequate capacity to sustain all relevant loads with an adequate margin of safety. This shall take into account the possibility of plastic deformation, buckling, fatigue and loss of liquid and gas tightness.

2. The structural integrity of cargo containment systems shall be demonstrated by compliance with **421.** to **426.**, as appropriate, for the cargo containment system type.

3. The structural integrity of cargo containment system types that are of novel design and differ significantly from those covered by **421.** to **426.** shall be demonstrated by compliance with **427.** to ensure that the overall level of safety provided in this chapter is maintained.

417. Structural analyses (IGC Code 4.17)

1.Analysis

(1) The design analyses shall be based on accepted principles of statics, dynamics and strength of materials.

(2) Simplified methods or simplified analyses may be used to calculate the load effects, provided that they are conservative. Model tests may be used in combination with, or instead of, theoretical calculations. In cases where theoretical methods are inadequate, model or full-scale tests may be required.

(3) When determining responses to dynamic loads, the dynamic effect shall be taken into account where it may affect structural integrity.

2. Load scenarios

(1) For each location or part of the cargo containment system to be considered and for each possible mode of failure to be analysed, all relevant combinations of loads that may act simultaneously shall be considered.

(2) The most unfavourable scenarios for all relevant phases during construction, handling, testing and in service, and conditions shall be considered.

3. When the static and dynamic stresses are calculated separately, and unless other methods of calculation are justified, the total stresses shall be calculated according to:

$$\sigma_x = \sigma_{x,st} \pm \sqrt{\sum (\sigma_{x,dyn})^2}$$

$$\sigma_y = \sigma_{y,st} \pm \sqrt{\sum (\sigma_{y,dyn})^2}$$

$$\sigma_z = \sigma_{z,st} \pm \sqrt{\sum (\sigma_{z,dyn})^2}$$

$$\tau_{xy} = \tau_{xy,st} \pm \sqrt{\sum (\tau_{xy,dyn})^2}$$

$$\tau_{xz} = \tau_{xz,st} \pm \sqrt{\sum (\tau_{xz,dyn})^2}$$

$$\tau_{yz} = \tau_{yz,st} \pm \sqrt{\sum (\tau_{yz,dyn})^2}$$

where:

$\sigma_{x,st}$, $\sigma_{y,st}$, $\sigma_{z,st}$, $\tau_{xy,st}$, $\tau_{xz,st}$, and $\tau_{yz,st}$ = static stresses

$\sigma_{x,dyn}$, $\sigma_{y,dyn}$, $\sigma_{z,dyn}$, $\tau_{xy,dyn}$, $\tau_{xz,dyn}$, and $\tau_{yz,dyn}$ = dynamic stresses

each shall be determined separately from acceleration components and hull strain components due to deflection and torsion.

418. Design conditions (IGC Code 4.18)

All relevant failure modes shall be considered in the design for all relevant load scenarios and design conditions. The design conditions are given in the earlier part of this chapter, and the load scenarios are covered by **417. 2**.

1. Ultimate design condition

Structural capacity may be determined by testing, or by analysis, taking into account both the elastic and plastic material properties, by simplified linear elastic analysis or by this section.

(1) Plastic deformation and buckling shall be considered.

(2) Analysis shall be based on characteristic load values as follows:
Permanent loads: Expected values
Functional loads: Specified values
Environmental loads: For wave loads: most probable largest load encountered during 10^8 wave encounters.

(3) For the purpose of ultimate strength assessment, the following material parameters apply:

(A) R_e = specified minimum yield stress at room temperature ($\mathrm{N/mm^2}$). If the stress-strain curve does not show a defined yield stress, the 0.2% proof stress applies.

(B) R_m = specified minimum tensile strength at room temperature ($\mathrm{N/mm^2}$). For welded connections where under-matched welds, i.e. where the weld metal has lower tensile strength than the parent metal, are unavoidable, such as in some aluminium alloys, the respective R_e and R_m of the welds, after any applied heat treatment, shall be used. In such cases, the transverse weld tensile strength shall not be less than the actual yield strength of the parent metal. If this cannot be achieved, welded structures made from such materials shall not be incorporated in cargo containment systems.

(C) The above properties shall correspond to the minimum specified mechanical properties of the material, including the weld metal in the as-fabricated condition. Subject to special consideration by the Society, account may be taken of the enhanced yield stress and tensile strength at low temperature. The temperature on which the material properties are based shall be shown on the **IGC Certificate** required in **104**.

(4) The equivalent stress σ_c (von Mises, Huber) shall be determined by:

$$\sigma_c = \sqrt{\sigma_x^2 + \sigma_y^2 + \sigma_z^2 - \sigma_x\sigma_y - \sigma_x\sigma_z - \sigma_y\sigma_z + 3(\tau_{xy}^2 + \tau_{xz}^2 + \tau_{yz}^2)}$$

where:

σ_x, σ_y, σ_z = total normal stress in x, y, z -direction;

τ_{xy}, τ_{xz}, τ_{yz} = total shear stress in x-y, x-z, y-z plane;

(5) Allowable stresses for materials other than those covered by **Sec 6** shall be subject to approval by the Society in each case.

(6) Stresses may be further limited by fatigue analysis, crack propagation analysis and buckling criteria.

2. Fatigue design condition 【See Guidance】

(1) The fatigue design condition is the design condition with respect to accumulated cyclic loading.

(2) Where a fatigue analysis is required, the cumulative effect of the fatigue load shall comply with:

$$\sum \frac{n_i}{N_i} + \frac{n_{Loading}}{N_{Loading}} \leq C_W$$

where:

n_i : number of stress cycles at each stress level during the life of the tank;

N_i : number of cycles to fracture for the respective stress level according to the Wohler (S-N) curve;

$n_{Loading}$: number of loading and unloading cycles during the life of the tank, not to be less than 1000[6]. Loading and unloading cycles include a complete pressure and thermal cycle; [6]cycles normally corresponds to 20 years of operation.

$N_{Loading}$: number of cycles to fracture for the fatigue loads due to loading and unloading; and

C_W : maximum allowable cumulative fatigue damage ratio.

The fatigue damage shall be based on the design life of the tank but not less than 10^8 wave encounters.

(3) Where required, the cargo containment system shall be subject to fatigue analysis, considering all fatigue loads and their appropriate combinations for the expected life of the cargo containment system. Consideration shall be given to various filling conditions.

(4) (A) Design S-N curves used in the analysis shall be applicable to the materials and weldments, construction details, fabrication procedures and applicable state of the stress envisioned.

(B) The S-N curves shall be based on a 97.6% probability of survival corresponding to the mean-minus-two-standard-deviation curves of relevant experimental data up to final failure. Use of S-N curves derived in a different way requires adjustments to the acceptable C_W values specified in (7) to (9).

(5) Analysis shall be based on characteristic load values as follows:

Permanent loads : Expected values
Functional loads : Specified values or specified history
Environmental loads : Expected load history, but not less than 10^8 cycles

If simplified dynamic loading spectra are used for the estimation of the fatigue life, they shall be specially considered by the Society.

(6) (A) Where the size of the secondary barrier is reduced, as is provided for in **404. 3**, fracture mechanics analyses of fatigue crack growth shall be carried out to determine:

(a) crack propagation paths in the structure;
(b) crack growth rate;
(c) the time required for a crack to propagate to cause a leakage from the tank;
(d) the size and shape of through thickness cracks; and
(e) the time required for detectable cracks to reach a critical state.

The fracture mechanics are, in general, based on crack growth data taken as a mean value plus two standard deviations of the test data.

(B) In analysing crack propagation, the largest initial crack not detectable by the inspection method applied shall be assumed, taking into account the allowable non-destructive testing and visual inspection criterion, as applicable.

(C) Crack propagation analysis under the condition specified in (7): the simplified load distribution and sequence over a period of 15 days may be used. Such distributions may be obtained as indicated in **Fig 7.5.13**. Load distribution and sequence for longer periods, such as in (8) and (9) shall be approved by the Society.

(D) The arrangements shall comply with (7) to (9), as applicable.

(7) For failures that can be reliably detected by means of leakage detection:

C_W shall be less than or equal to 0.5.

Predicted remaining failure development time, from the point of detection of leakage till reaching a critical state, shall not be less than 15 days, unless different requirements apply for ships engaged in particular voyages.

(8) For failures that cannot be detected by leakage but that can be reliably detected at the time of in-service inspections:

C_W shall be less than or equal to 0.5.

Predicted remaining failure development time, from the largest crack not detectable by in-service inspection methods until reaching a critical state, shall not be less than three times the inspection interval.

(9) In particular locations of the tank, where effective defect or crack development detection cannot be assured, the following, more stringent, fatigue acceptance criteria shall be applied as a minimum:

C_W shall be less than or equal to 0.1.

Predicted failure development time, from the assumed initial defect until reaching a critical state, shall not be less than three times the lifetime of the tank.

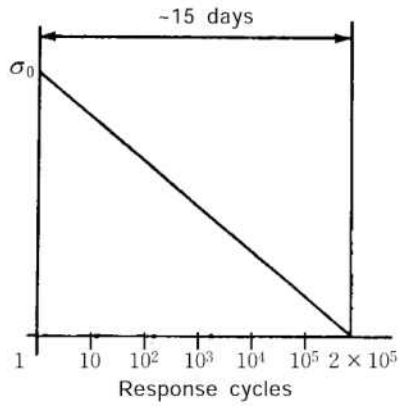

σ_0 = most probable maximum stress over the life of the ship
Response cycle scale is logarithmic; the value of 2 x 10^5 is given as an example of estimate.

Fig 7.5.13 Simplified Load Distribution

3. Accident design condition

(1) The accident design condition is a design condition for accidental loads with extremely low probability of occurrence.

(2) Analysis shall be based on the characteristic values as follows:
Permanent loads : Expected values
Functional loads : Specified values
Environmental loads : Specified values
Accidental loads : Specified values or expected values

(3) Loads mentioned in **413. 9** and **415.** need not be combined with each other or with wave-induced loads.

419. Materials (IGC Code 4.19) 【See Guidance】

1. Materials forming ship structure

(1) To determine the grade of plate and sections used in the hull structure, a temperature calculation shall be performed for all tank types when the cargo temperature is below -10°C. The following assumptions shall be made in this calculation:
(A) the primary barrier of all tanks shall be assumed to be at the cargo temperature;
(B) in addition to (A), where a complete or partial secondary barrier is required, it shall be assumed to be at the cargo temperature at atmospheric pressure for any one tank only;
(C) for worldwide service, ambient temperatures shall be taken as 5°C for air and 0°C for seawater. Higher values may be accepted for ships operating in restricted areas and, con-

versely, lower values may be fixed by the Society for ships trading to areas where lower temperatures are expected during the winter months;

(D) still air and seawater conditions shall be assumed, i.e. no adjustment for forced convection;

(E) degradation of the thermal insulation properties over the life of the ship due to factors such as thermal and mechanical ageing, compaction, ship motions and tank vibrations, as defined in **3** (6) and **3** (7), shall be assumed;

(F) the cooling effect of the rising boil-off vapour from the leaked cargo shall be taken into account, where applicable;

(G) credit for hull heating may be taken in accordance with **1** (5), provided the heating arrangements are in compliance with **1** (6);

(H) no credit shall be given for any means of heating, except as described in **1** (5); and

(I) for members connecting inner and outer hulls, the mean temperature may be taken for determining the steel grade. The ambient temperatures used in the design, described in this paragraph, shall be shown on the **IGC Certificate**.

(2) The shell and deck plating of the ship and all stiffeners attached thereto shall be in accordance the requirements of **Pt 3** of the Rules, If the calculated temperature of the material in the design condition is below −5°C due to the influence of the cargo temperature, the material shall be in accordance with **Table 7.5.8**.

(3) The materials of all other hull structures for which the calculated temperature in the design condition is below 0°C, due to the influence of cargo temperature and that do not form the secondary barrier, shall also be in accordance with **Table 7.5.8**. This includes hull structure supporting the cargo tanks, inner bottom plating, longitudinal bulkhead plating, transverse bulkhead plating, floors, webs, stringers and all attached stiffening members.

(4) The hull material forming the secondary barrier shall be in accordance with **Table 7.5.5a** and **7.5.5b**. Where the secondary barrier is formed by the deck or side shell plating, the material grade required by **Table 7.5.5a** and **7.5.5b** shall be carried into the adjacent deck or side shell plating, where applicable, to a suitable extent. *(2022)*

(5) Means of heating structural materials may be used to ensure that the material temperature does not fall below the minimum allowed for the grade of material specified in **Table 7.5.8.** In the calculations required in (1), credit for such heating may be taken in accordance with the following:

(A) for any transverse hull structure;

(B) for longitudinal hull structure referred to in (2) and (3) where colder ambient temperatures are specified, provided the material remains suitable for the ambient temperature conditions of +5°C for air and 0°C for seawater with no credit taken in the calculations for heating; and

(C) as an alternative to (B), for longitudinal bulkhead between cargo tanks, credit may be taken for heating, provided the material remain suitable for a minimum design temperature of −30°C, or a temperature 30°C lower than that determined by (1) with the heating considered, whichever is less.

In this case, the ship's longitudinal strength shall comply with **Pt 3, Ch 3** of the Rules for both when those bulkhead(s) are considered effective and not.

(6) The means of heating referred to in (5) shall comply with the following requirements:

(A) the heating system shall be arranged so that, in the event of failure in any part of the system, standby heating can be maintained equal to not less than 100% of the theoretical heat requirement;

(B) the heating system shall be considered as an essential auxiliary. All electrical components of at least one of the systems provided in accordance with (5) (A) shall be supplied from the emergency source of electrical power; and

(C) the design and construction of the heating system shall be included in the approval of the containment system by the Society.

2. Materials of primary and secondary barriers

(1) Metallic materials used in the construction of primary and secondary barriers not forming the hull, shall be suitable for the design loads that they may be subjected to, and be in accordance with, **Table 7.5.4, 7.5.5a, 7.5.5b.** or **7.5.6**. *(2022)*

(2) Materials, either non-metallic or metallic but not covered by **Table 7.5.4, 7.5.5a, 7.5.5b** and **7.5.6**, used in the primary and secondary barriers may be approved by the Society, considering the design loads that they may be subjected to, their properties and their intended use. *(2022)*

(3) Where non-metallic materials, including composites, are used for, or incorporated in the primary

or secondary barriers, they shall be tested for the following properties, as applicable, to ensure that they are adequate for the intended service:
(A) compatibility with the cargoes
(B) ageing
(C) mechanical properties
(D) thermal expansion and contraction
(E) abrasion
(F) cohesion
(G) resistance to vibrations
(H) resistance to fire and flame spread and
(I) resistance to fatigue failure and crack propagation.

(4) The above properties, where applicable, shall be tested for the range between the expected maximum temperature in service and +5°C below the minimum design temperature, but not lower than −196°C.

(5) (A) Where non-metallic materials, including composites, are used for the primary and secondary barriers, the joining processes shall also be tested as described above.
(B) Guidance on the use of non-metallic materials in the construction of primary and secondary barriers is provided in **Annex 「 7A-6 Non-Metallic Materials 」 of the Guidance.** *(2021)* **【See Guidance】**

(6) Consideration may be given to the use of materials in the primary and secondary barrier, which are not resistant to fire and flame spread, provided they are protected by a suitable system such as a permanent inert gas environment, or are provided with a fire-retardant barrier.

3. Thermal insulation and other materials used in cargo containment systems

(1) Load-bearing thermal insulation and other materials used in cargo containment systems shall be suitable for the design loads.

(2) Thermal insulation and other materials used in cargo containment systems shall have the following properties, as applicable, to ensure that they are adequate for the intended service:
(A) compatibility with the cargoes
(B) solubility in the cargo
(C) absorption of the cargo
(D) shrinkage
(E) ageing
(F) closed cell content
(G) density
(H) mechanical properties, to the extent that they are subjected to cargo and other loading effects, thermal expansion and contraction
(I) abrasion
(J) cohesion
(K) thermal conductivity
(L) resistance to vibrations
(M) resistance to fire and flame spread
(N) resistance to fatigue failure and crack propagation

(3) The above properties, where applicable, shall be tested for the range between the expected maximum temperature in service and 5°C below the minimum design temperature, but not lower than −196°C.

(4) Due to location or environmental conditions, thermal insulation materials shall have suitable properties of resistance to fire and flame spread and shall be adequately protected against penetration of water vapour and mechanical damage. Where the thermal insulation is located on or above the exposed deck, and in way of tank cover penetrations, it shall have suitable fire resistance properties in accordance with recognized standards or be covered with a material having low flame-spread characteristics and forming an efficient approved vapour seal.

(5) Thermal insulation that does not meet recognized standards for fire resistance may be used in hold spaces that are not kept permanently inerted, provided its surfaces are covered with material with low flame-spread characteristics and that forms an efficient approved vapour seal.

(6) Testing for thermal conductivity of thermal insulation shall be carried out on suitably aged samples.

(7) Where powder or granulated thermal insulation is used, measures shall be taken to reduce compaction in service and to maintain the required thermal conductivity and also prevent any undue increase of pressure on the cargo containment system.

420. Construction processes (IGC Code 4.20) 【See Guidance】

1. Weld joint design

(1) All welded joints of the shells of independent tanks shall be of the in-plane butt weld full penetration type. For dome-to-shell connections only, tee welds of the full penetration type may be used depending on the results of the tests carried out at the approval of the welding procedure. Except for small penetrations on domes, nozzle welds shall also be designed with full penetration.

(2) Welding joint details for type C independent tanks, and for the liquid-tight primary barriers of type B independent tanks primarily constructed of curved surfaces, shall be as follows:

(A) all longitudinal and circumferential joints shall be of butt welded, full penetration, double vee or single vee type. Full penetration butt welds shall be obtained by double welding or by the use of backing rings. If used, backing rings shall be removed except from very small process pressure vessels. Other edge preparations may be permitted, depending on the results of the tests carried out at the approval of the welding procedure; and

(B) the bevel preparation of the joints between the tank body and domes and between domes and relevant fittings shall be designed according to **Pt 5, Ch 5** of the Rules. All welds connecting nozzles, domes or other penetrations of the vessel and all welds connecting flanges to the vessel or nozzles shall be full penetration welds.

(3) Where applicable, all the construction processes and testing, except that specified in **3**, shall be done in accordance with the applicable provisions of **Sec 6**.

2. Design for gluing and other joining processes

The design of the joint to be glued (or joined by some other process except welding) shall take account of the strength characteristics of the joining process.

3. Testing

(1) All cargo tanks and process pressure vessels shall be subjected to hydrostatic or hydropneumatic pressure testing in accordance with **421.** to **426.**, as applicable for the tank type.

(2) All tanks shall be subject to a tightness test which may be performed in combination with the pressure test referred to in (1).

(3) Requirements with respect to inspection of secondary barriers shall be decided by the Society in each case, taking into account the accessibility of the barrier (see **406. 2**).

(4) The Society may require that for ships fitted with novel type B independent tanks, or tanks designed according to **427.** at least one prototype tank and its supporting structures shall be instrumented with strain gauges or other suitable equipment to confirm stress levels. Similar instrumentation may be required for type C independent tanks, depending on their configuration and on the arrangement of their supports and attachments.

(5) The overall performance of the cargo containment system shall be verified for compliance with the design parameters during the first full loading and discharging of the cargo, in accordance with the survey procedure and requirements in **104.** and the requirements of the Society. Records of the performance of the components and equipment essential to verify the design parameters, shall be maintained and be available to the Society.

(6) Heating arrangements, if fitted in accordance with **419. 1** (5) and **419. 1** (6), shall be tested for required heat output and heat distribution.

(7) The cargo containment system shall be inspected for cold spots during, or immediately following, the first loaded voyage. Inspection of the integrity of thermal insulation surfaces that cannot be visually checked shall be carried out in accordance with recognized standards.

421. Type A independent tanks (IGC Code 4.21) 【See Guidance】

1. Design basis

(1) Type A independent tanks are tanks primarily designed using classical ship-structural analysis procedures in accordance with recognized standards. Where such tanks are primarily constructed of plane surfaces, the design vapour pressure P_0 shall be less than 0.07 MPa.

(2) In case of the cargo temperature at atmospheric pressure is below −10°C, a complete secondary barrier shall be provided as required in **405.** The secondary barrier shall be designed in accordance with **406.**

2. Structural analysis

(1) A structural analysis shall be performed taking into account the internal pressure as indicated in **413. 2**, and the interaction loads with the supporting and keying system as well as a reasonable part of the ship's hull.

(2) For parts, such as supporting structures, not otherwise covered by the requirements of **Pt 3, Ch 15** of the Rules, stresses shall be determined by direct calculations, taking into account the loads referred to in **412.** to **415.** as far as applicable, and the ship deflection in way of supporting structures.

(3) The tanks with supports shall be designed for the accidental loads specified in **415.** These loads need not be combined with each other or with environmental loads.

3. Ultimate design condition

(1) For tanks primarily constructed of plane surfaces, the nominal membrane stresses for primary and secondary members (stiffeners, web frames, stringers, girders), when calculated by classical analysis procedures, shall not exceed the lower of $R_m/2.66$ or $R_e/1.33$ for nickel steels, carbon-manganese steels, austenitic steels and aluminium alloys, where R_m and R_e are defined in **418. 1** (3). However, if detailed calculations are carried out for the primary members, the equivalent stress σ_c, as defined in **418. 1** (4), may be increased over that indicated above to a stress acceptable to the Society. Calculations shall take into account the effects of bending, shear, axial and torsional deformation as well as the hull/cargo tank interaction forces due to the deflection of the double bottom and cargo tank bottoms.

(2) Tank boundary scantlings shall meet at least the requirements of **Pt 3, Ch 15** of the Rules for deep tanks taking into account the internal pressure as indicated in **413. 2** and any corrosion allowance required by **403. 5**.

(3) The cargo tank structure shall be reviewed against potential buckling.

4. Accident design condition

(1) The tanks and the tank supports shall be designed for the accidental loads and design conditions specified in **403. 4** (3) and **415.**, as relevant.

(2) When subjected to the accidental loads specified in **415.**, the stress shall comply with the acceptance criteria specified in **421. 3**, modified as appropriate, taking into account their lower probability of occurrence.

5. Testing

All type A independent tanks shall be subjected to a hydrostatic or hydropneumatic test. This test shall be performed such that the stresses approximate, as far as practicable, the design stresses, and that the pressure at the top of the tank corresponds at least to the MARVS. When a hydropneumatic test is performed, the conditions shall simulate, as far as practicable, the design loading of the tank and of its support structure, including dynamic components, while avoiding stress levels that could cause permanent deformation.

422. Type B independent tanks (IGC Code 4.22) 【See Guidance】

1. Design basis

(1) Type B independent tanks are tanks designed using model tests, refined analytical tools and analysis methods to determine stress levels, fatigue life and crack propagation characteristics. Where such tanks are primarily constructed of plane surfaces (prismatic tanks), the design vapour pressure P_0 shall be less than 0.07 MPa.

(2) If the cargo temperature at atmospheric pressure is below −10°C, a partial secondary barrier with a small leak protection system shall be provided as required in **405.** The small leak protection system shall be designed according to **407.**

2. Structural analysis

(1) The effects of all dynamic and static loads shall be used to determine the suitability of the structure with respect to:
(A) plastic deformation
(B) buckling
(C) fatigue failure and
(D) crack propagation.

Finite element analysis or similar methods and fracture mechanics analysis, or an equivalent approach, shall be carried out.

(2) A three-dimensional analysis shall be carried out to evaluate the stress levels, including interaction with the ship's hull. The model for this analysis shall include the cargo tank with its supporting and keying system, as well as a reasonable part of the hull.

(3) A complete analysis of the particular ship accelerations and motions in irregular waves, and of the response of the ship and its cargo tanks to these forces and motions shall be performed, unless the data is available from similar ships.

3. Ultimate design condition

(1) Plastic deformation

(A) For type B independent tanks, primarily constructed of bodies of revolution, the allowable stresses shall not exceed:

$$\sigma_m \le f$$
$$\sigma_L \le 1.5f$$
$$\sigma_b \le 1.5F$$
$$\sigma_L + \sigma_b \le 1.5F$$
$$\sigma_m + \sigma_b \le 1.5F$$
$$\sigma_m + \sigma_b + \sigma_g \le 3.0F$$
$$\sigma_L + \sigma_b + \sigma_g \le 3.0F$$

where:

σ_m : equivalent primary general membrane stress

σ_L : equivalent primary local membrane stress

σ_b : equivalent primary bending stress

σ_g : equivalent secondary stress;

f : the lesser of R_m/A or R_e/B; and

F : the lesser of R_m/C or R_e/D

with R_m and R_e as defined in **418. 1** (3). With regard to the stresses σ_m, σ_L, σ_b and σ_g, the definition of stress categories in **428. 3** are referred.

The values A, B, C and D shall be shown on the **IGC Certificate** and shall have at least the following minimum values of **Table 7.5.2.**:

Table 7.5.2 Values of A, B, C and D

	Nickel steels and carbon-manganese steels	Austenitic steels	Aluminium alloys
A	3	3.5	4
B	2	1.6	1.5
C	3	3	3
D	1.5	1.5	1.5
The above figures may be altered, taking into account the design condition considered in acceptance with the Society.			

(B) For type B independent tanks, primarily constructed of plane surfaces, the allowable membrane equivalent stresses applied for finite element analysis shall not exceed:

(a) for nickel steels and carbon-manganese steels, the lesser of $R_m/2$ or $R_e/1.2$;

(b) for austenitic steels, the lesser of $R_m/2.5$ or $R_e/1.2$; and

(c) for aluminium alloys, the lesser of $R_m/2.5$ or $R_m/1.2$.

The above figures may be amended, taking into account the locality of the stress, stress analysis methods and design condition considered in acceptance with the Society.

(C) The thickness of the skin plate and the size of the stiffener shall not be less than those required for type A independent tanks.

(2) Buckling

Buckling strength analyses of cargo tanks subject to external pressure and other loads causing compressive stresses shall be carried out in accordance with recognized standards. The method shall adequately account for the difference in theoretical and actual buckling stress as a result of plate edge misalignment, lack of straightness or flatness, ovality and deviation from true circular form over a specified arc or chord length, as applicable.

4. Fatigue design condition

(1) Fatigue and crack propagation assessment shall be performed in accordance with **418. 2**. The acceptance criteria shall comply with **418. 2** (7), **418. 2** (8) or **418. 2** (9), depending on the detectability of the defect.

(2) Fatigue analysis shall consider construction tolerances.

(3) Where deemed necessary by the Society, model tests may be required to determine stress concentration factors and fatigue life of structural elements.

5. Accident design condition

(1) The tanks and the tank supports shall be designed for the accidental loads and design conditions specified in **403. 4** (3) and **415.**, as applicable.

(2) When subjected to the accidental loads specified in **415.**, the stress shall comply with the acceptance criteria specified in **3**, modified as appropriate, taking into account their lower probability of occurrence.

6. Testing

Type B independent tanks shall be subjected to a hydrostatic or hydropneumatic test as follows:

(1) the test shall be performed as required in **421. 5** for type A independent tanks; and

(2) in addition, the maximum primary membrane stress or maximum bending stress in primary members under test conditions shall not exceed 90% of the yield strength of the material (as fabricated) at the test temperature. To ensure that this condition is satisfied, when calculations indicate that this stress exceeds 75% of the yield strength, the prototype test shall be monitored by the use of strain gauges or other suitable equipment.

7. Marking

Any marking of the pressure vessel shall be achieved by a method that does not cause unacceptable local stress raisers.

423. Type C independent tanks (IGC Code 4.23) 【See Guidance】

1. Design basis

(1) The design basis for type C independent tanks is based on pressure vessel criteria modified to include fracture mechanics and crack propagation criteria. The minimum design pressure defined in **423. 1** (2) is intended to ensure that the dynamic stress is sufficiently low, so that an initial surface flaw will not propagate more than half the thickness of the shell during the lifetime of the tank.

(2) The design vapour pressure shall not be less than:

$$P_o = 0.2 + AC(\rho_r)^{1.5} \ (\mathrm{MPa})$$

where:

$$A = 0.00185\left(\frac{\sigma_m}{\Delta\sigma_A}\right)^2$$

with:

σ_m : design primary membrane stress;

$\Delta\sigma_A$: allowable dynamic membrane stress (double amplitude at probability level $Q = 10^{-8}$)

and equal to:

- 55 $\mathrm{N/mm^2}$ for ferritic-perlitic, martensitic and austenitic steel;
- 25 $\mathrm{N/mm^2}$ for aluminium alloy (5083-O);
- When a specified design life of the tank is longer than 10^8 wave encounters, $\Delta\sigma_A$ shall be modified to give equivalent crack propagation corresponding to the design life.

C : a characteristic tank dimension to be taken as the greatest of the following:

h, $0.75b$ or $0.45l$

with:

h : height of tank (dimension in ship's vertical direction) (m);

b : width of tank (dimension in ship's transverse direction) (m);

l : length of tank (dimension in ship's longitudinal direction) (m);

ρ_r : the relative density of the cargo (ρ_r = 1 for fresh water) at the design temperature.

(3) The Society may allocate a tank complying with the criteria of type C tank minimum design pressure as in (2), to a type A or type B, dependent on the configuration of the tank and the arrangement of its supports and attachments.

2. Shell thickness

(1) The shell thickness shall be as follows:

(A) For pressure vessels, the thickness calculated according to (4) shall be considered as a minimum thickness after forming, without any negative tolerance.

(B) For pressure vessels, the minimum thickness of shell and heads including corrosion allowance, after forming, shall not be less than 5 mm for carbon-manganese steels and nickel steels, 3 mm for austenitic steels or 7 mm for aluminium alloys.

(C) The welded joint efficiency factor to be used in the calculation according to (4) shall be 0.95 when the inspection and the non-destructive testing referred to in **605. 6** (5) are carried out. This figure may be increased up to 1 when account is taken of other considerations, such as the material used, type of joints, welding procedure and type of loading. For process pressure vessels, the Society may accept partial non-destructive tests, but not less than those of **605. 6** (5), depending on such factors as the material used, the design temperature, the nil-ductility transition temperature of the material, as fabricated, and the type of joint and welding procedure, but in this case an efficiency factor of not more than 0.85 shall be adopted. For special materials, the above-mentioned factors shall be reduced, depending on the specified mechanical properties of the welded joint.

(2) The design liquid pressure defined in **413. 2** shall be taken into account in the internal pressure calculations.

(3) The design external pressure P_e, used for verifying the buckling of the pressure vessels, shall not be less than that given by:

$$P_e = P_1 + P_2 + P_3 + P_4 \,(\mathrm{MPa})$$

where:

P_1 : setting value of vacuum relief valves. For vessels not fitted with vacuum relief valves, P_1 shall be specially considered, but shall not, in general, be taken as less than 0.025 MPa;

P_2 : the set pressure of the pressure relief valves (PRVs) for completely closed spaces containing pressure vessels or parts of pressure vessels; elsewhere P_2=0 ;

P_3 : compressive actions in or on the shell due to the weight and contraction of thermal insulation, weight of shell including corrosion allowance and other miscellaneous external pressure loads to which the pressure vessel may be subjected. These include, but are not limited to, weight of domes, weight of towers and piping, effect of product in the partially filled condition, accelerations and hull deflection. In addition, the local effect of

external or internal pressures or both shall be taken into account; and

P_4 : external pressure due to head of water for pressure vessels or part of pressure vessels on exposed decks; elsewhere P_4 = 0.

(4) Scantlings based on internal pressure shall be calculated as follows: the thickness and form of pressure-containing parts of pressure vessels, under internal pressure, as defined in **413. 2**, including flanges, shall be determined. These calculations shall in all cases be based on accepted pressure vessel design theory. Openings in pressure-containing parts of pressure vessels shall be reinforced in accordance with **Pt 4, Ch 2** of the Rules.

(5) Stress analysis in respect of static and dynamic loads shall be performed as follows:

(a) Pressure vessel scantlings shall be determined in accordance with **2** (1) to **2** (4) and **423. 3**.

(b) Calculations of the loads and stresses in way of the supports and the shell attachment of the support shall be made. Loads referred to in **412.** to **415.** shall be used, as applicable. Stresses in way of the supporting structures shall be to a recognized standard acceptable to the Society. In special cases, a fatigue analysis may be required by the Society.

(c) If required by the Society, secondary stresses and thermal stresses shall be specially considered.

3. Ultimate design condition

(1) Plastic deformation
For type C independent tanks, the allowable stresses shall not exceed:

$$\sigma_m \leq f$$
$$\sigma_L \leq 1.5f$$
$$\sigma_b \leq 1.5f$$
$$\sigma_L + \sigma_b \leq 1.5f$$
$$\sigma_m + \sigma_b \leq 1.5f$$
$$\sigma_m + \sigma_b + \sigma_g \leq 3.0f$$
$$\sigma_L + \sigma_b + \sigma_g \leq 3.0f$$

where:

σ_m : equivalent primary general membrane stress;

σ_L : equivalent primary local membrane stress;

σ_b : equivalent primary bending stress;

σ_g : equivalent secondary stress;

f : the lesser of (R_m/A) or (R_e/B); and

with R_m and R_e as defined in **418. 1** (3). With regard to the stresses σ_m, σ_L, σ_b and σ_g, the definition of stress categories in **428. 3** are referred. The values A and B shall be shown on the **IGC Certificate** and shall have at least the following minimum values indicated in the **Table 7.5.3**.:

Table 7.5.3 Values of A and B

	Nickel steels and carbon-manganese steels	Austenitic steels	Aluminium alloys
A	3	3.5	4
B	1.5	1.5	1.5

(2) Buckling criteria shall be as follows:
the thickness and form of pressure vessels subject to external pressure and other loads causing compressive stresses shall be based on calculations using accepted pressure vessel buckling theory and shall adequately account for the difference in theoretical and actual buckling stress as

a result of plate edge misalignment, ovality and deviation from true circular form over a specified arc or chord length.

4. Fatigue design condition

For large type C independent tanks, where the cargo at atmospheric pressure is below −55°C, the Society may require additional verification to check their compliance with **1** (1) regarding static and dynamic stress.

5. Accident design condition

(1) The tanks and the tank supporting structures shall be designed for the accidental loads and design conditions specified in **403. 4** (3) and **415.**, as applicable.

(2) When subjected to the accidental loads specified in **415.**, the stress shall comply with the acceptance criteria specified in **3** (1), modified as appropriate taking into account their lower probability of occurrence.

6. Testing

(1) Each pressure vessel shall be subjected to a hydrostatic test at a pressure measured at the top of the tanks, of not less than 1.5 P_0. In no case during the pressure test shall the calculated primary membrane stress at any point exceed 90% of the yield stress of the material. To ensure that this condition is satisfied where calculations indicate that this stress will exceed 0.75 times the yield strength, the prototype test shall be monitored by the use of strain gauges or other suitable equipment in pressure vessels other than simple cylindrical and spherical pressure vessels.

(2) The temperature of the water used for the test shall be at least 30°C above the nil-ductility transition temperature of the material, as fabricated.

(3) The pressure shall be held for 2 h per 25 mm of thickness, but in no case less than 2 h.

(4) Where necessary for cargo pressure vessels, a hydropneumatic test may be carried out under the conditions prescribed in (1) to (3).

(5) Special consideration may be given to the testing of tanks in which higher allowable stresses are used, depending on service temperature. However, the requirements of (1) shall be fully complied with.

(6) After completion and assembly, each pressure vessel and its related fittings shall be subjected to an adequate tightness test which may be performed in combination with the pressure testing referred to in (1).

(7) Pneumatic testing of pressure vessels other than cargo tanks shall only be considered on an individual case basis. Such testing shall only be permitted for those vessels designed or supported such that they cannot be safely filled with water, or for those vessels that cannot be dried and are to be used in a service where traces of the testing medium cannot be tolerated.

7. Marking

The required marking of the pressure vessel shall be achieved by a method that does not cause unacceptable local stress raisers.

424. Membrane tanks (IGC Code 4.24) 【See Guidance】

1. Design basis

(1) The design basis for membrane containment systems is that thermal and other expansion or contraction is compensated for without undue risk of losing the tightness of the membrane.

(2) A systematic approach based on analysis and testing shall be used to demonstrate that the system will provide its intended function in consideration of the events identified in service as specified in **2** (1).

(3) If the cargo temperature at atmospheric pressure is below −10°C, a complete secondary barrier shall be provided as required in **405.** The secondary barrier shall be designed according to **406.**

(4) The design vapour pressure P_0 shall not normally exceed 0.025 MPa. If the hull scantlings are increased accordingly and consideration is given, where appropriate, to the strength of the supporting thermal insulation, P_0 may be increased to a higher value, but less than 0.07 MPa.

(5) The definition of membrane tanks does not exclude designs such as those in which non-metallic membranes are used or where membranes are included or incorporated into the thermal insulation.

(6) The thickness of the membranes shall not normally exceed 10 mm.

(7) The circulation of inert gas throughout the primary insulation space and the secondary insulation space, in accordance with **902. 1**, shall be sufficient to allow for effective means of gas detection.

2. Design considerations

(1) Potential incidents that could lead to loss of fluid tightness over the life of the membranes shall be evaluated. These include, but are not limited to:

(A) Ultimate design events:

(a) tensile failure of membranes;
(b) compressive collapse of thermal insulation;
(c) thermal ageing;
(d) loss of attachment between thermal insulation and hull structure;
(e) loss of attachment of membranes to thermal insulation system;
(f) structural integrity of internal structures and their supporting structures; and
(g) failure of the supporting hull structure.

(B) Fatigue design events:

(a) fatigue of membranes including joints and attachments to hull structure;
(b) fatigue cracking of thermal insulation;
(c) fatigue of internal structures and their supporting structures; and
(d) fatigue cracking of inner hull leading to ballast water ingress.

(C) Accident design events:

(a) accidental mechanical damage (such as dropped objects inside the tank while in service);
(b) accidental overpressurization of thermal insulation spaces;
(c) accidental vacuum in the tank; and
(d) water ingress through the inner hull structure.

Designs where a single internal event could cause simultaneous or cascading failure of both membranes are unacceptable.

(2) The necessary physical properties (mechanical, thermal, chemical, etc.) of the materials used in the construction of the cargo containment system shall be established during the design development in accordance with **1** (2).

3. Loads and load combinations

Particular consideration shall be given to the possible loss of tank integrity due to either an overpressure in the interbarrier space, a possible vacuum in the cargo tank, the sloshing effects, hull vibration effects, or any combination of these events.

4. Structural analyses

(1) Structural analyses and/or testing for the purpose of determining the ultimate strength and fatigue assessments of the cargo containment and associated structures, e.g. structures as defined in **409.**, shall be performed. The structural analysis shall provide the data required to assess each failure mode that has been identified as critical for the cargo containment system.

(2) Structural analyses of the hull shall take into account the internal pressure as indicated in **413. 2**. Special attention shall be paid to deflections of the hull and their compatibility with the membrane and associated thermal insulation.

(3) The analyses referred to in (1) and (2) shall be based on the particular motions, accelerations and response of ships and cargo containment systems.

5. Ultimate design condition

(1) The structural resistance of every critical component, subsystem or assembly shall be established, in accordance with **1** (2), for in-service conditions.

(2) The choice of strength acceptance criteria for the failure modes of the cargo containment system, its attachments to the hull structure and internal tank structures, shall reflect the consequences associated with the considered mode of failure.

(3) The inner hull scantlings shall meet the requirements for deep tanks taking into account the internal pressure as indicated in **413. 2** and the specified appropriate requirements for sloshing load as defined in **414. 3**.

6. Fatigue design condition

(1) Fatigue analysis shall be carried out for structures inside the tank, i.e. pump towers, and for parts of membrane and pump tower attachments, where failure development cannot be reliably

detected by continuous monitoring.

(2) The fatigue calculations shall be carried out in accordance with **418. 2**, with relevant requirements depending on:

(A) the significance of the structural components with respect to structural integrity; and

(B) availability for inspection.

(3) For structural elements for which it can be demonstrated by tests and/or analyses that a crack will not develop to cause simultaneous or cascading failure of both membranes, C_W shall be less than or equal to 0.5.

(4) Structural elements subject to periodic inspection, and where an unattended fatigue crack can develop to cause simultaneous or cascading failure of both membranes, shall satisfy the fatigue and fracture mechanics requirements stated in **418. 2** (8).

(5) Structural element not accessible for in-service inspection, and where a fatigue crack can develop without warning to cause simultaneous or cascading failure of both membranes, shall satisfy the fatigue and fracture mechanics requirements stated in **418. 2** (9).

7. Accident design condition

(1) The containment system and the supporting hull structure shall be designed for the accidental loads specified in **415.** These loads need not be combined with each other or with environmental loads.

(2) Additional relevant accident scenarios shall be determined based on a risk analysis. Particular attention shall be paid to securing devices inside tanks.

8. Design development testing

(1) The design development testing required in **1** (2) shall include a series of analytical and physical models of both the primary and secondary barriers, including corners and joints, tested to verify that they will withstand the expected combined strains due to static, dynamic and thermal loads. This will culminate in the construction of a prototype-scaled model of the complete cargo containment system. Testing conditions considered in the analytical and physical models shall represent the most extreme service conditions the cargo containment system will be likely to encounter over its life. Proposed acceptance criteria for periodic testing of secondary barriers required in **406. 2** may be based on the results of testing carried out on the prototype-scaled model.

(2) The fatigue performance of the membrane materials and representative welded or bonded joints in the membranes shall be determined by tests. The ultimate strength and fatigue performance of arrangements for securing the thermal insulation system to the hull structure shall be determined by analyses or tests.

9. Testing

(1) In ships fitted with membrane cargo containment systems, all tanks and other spaces that may normally contain liquid and are adjacent to the hull structure supporting the membrane, shall be hydrostatically tested.

(2) All hold structures supporting the membrane shall be tested for tightness before installation of the cargo containment system.

(3) Pipe tunnels and other compartments that do not normally contain liquid need not be hydrostatically tested.

425. Integral tanks (IGC Code 4.25) 【See Guidance】

1. Design basis

Integral tanks that form a structural part of the hull and are affected by the loads that stress the adjacent hull structure shall comply with the following:

(A) the design vapour pressure P_0 as defined in **401. 2** shall not normally exceed 0.025 MPa. If the hull scantlings are increased accordingly, P_0 may be increased to a higher value, but less than 0.07 MPa;

(B) integral tanks may be used for products, provided the boiling point of the cargo is not below −10°C. A lower temperature may be accepted by the Society subject to special consideration, but in such cases a complete secondary barrier shall be provided; and

(C) products required by **Sec 19** to be carried in type 1G ships shall not be carried in integral tanks.

2. Structural analysis

The structural analysis of integral tanks shall be in accordance with the requirements of **Pt 3, Ch 15** of the Rules.

3. Ultimate design condition

(1) The tank boundary scantlings shall meet the requirements for deep tanks, taking into account the internal pressure as indicated in **413. 2**.

(2) For integral tanks, allowable stresses shall normally be those given for hull structure in the requirements of the Society.

4. Accident design condition

(1) The tanks and the tank supports shall be designed for the accidental loads specified in **403. 4** (3) and **415.**, as relevant.

(2) When subjected to the accidental loads specified in **415.**, the stress shall comply with the acceptance criteria specified in **3**, modified as appropriate, taking into account their lower probability of occurrence.

5. Testing

All integral tanks shall be hydrostatically or hydropneumatically tested. The test shall be performed so that the stresses approximate, as far as practicable, to the design stresses and that the pressure at the top of the tank corresponds at least to the MARVS.

426. Semi-membrane tanks (IGC Code 4.26) 【See Guidance】

1. Design basis

(1) Semi-membrane tanks are non-self-supporting tanks when in the loaded condition and consist of a layer, parts of which are supported through thermal insulation by the adjacent hull structure, whereas the rounded parts of this layer connecting the above-mentioned supported parts are designed also to accommodate the thermal and other expansion or contraction.

(2) The design vapour pressure P_0 shall not normally exceed 0.025 MPa. If the hull scantlings are increased accordingly, and consideration is given, where appropriate, to the strength of the supporting thermal insulation, P_0 may be increased to a higher value, but less than 0.07 MPa.

(3) For semi-membrane tanks the relevant requirements in this section for independent tanks or for membrane tanks shall be applied as appropriate.

(4) In the case of semi-membrane tanks that comply in all respects with the requirements applicable to type B independent tanks, except for the manner of support, the Society may, after special consideration, accept a partial secondary barrier.

427. Limit state design for novel concepts (IGC Code 4.27)

1. Cargo containment systems that are of a novel configuration that cannot be designed using Articles **421.** to **426.** shall be designed using this Article and **403.~410.** and **411.~415.** of this chapter, and also **416.~418.** and **419.~420.**, as applicable. Cargo containment system design according to this Article shall be based on the principles of limit state design which is an approach to structural design that can be applied to established design solutions as well as novel designs. This more generic approach maintains a level of safety similar to that achieved for known containment systems as designed using **421.** to **426.**

2. The limit state design is a systematic approach where each structural element is evaluated with respect to possible failure modes related to the design conditions identified in **403. 4**. A limit state can be defined as a condition beyond which the structure, or part of a structure, no longer satisfies the requirements.

3. For each failure mode, one or more limit states may be relevant. By consideration of all relevant limit states, the limit load for the structural element is found as the minimum limit load resulting from all the relevant limit states. The limit states are divided into the three following categories:

(1) Ultimate limit states (ULS), which correspond to the maximum load-carrying capacity or, in some cases, to the maximum applicable strain or deformation; under intact (undamaged) conditions.

(2) Fatigue limit states (FLS), which correspond to degradation due to the effect of time varying (cyclic) loading.

(3) Accident limit states (ALS), which concern the ability of the structure to resist accidental situations.

4. The procedure and relevant design parameters of the limit state design shall comply with the 'Standards for the Use of Limit State Methodologies in the Design of Cargo Containment Systems of Novel Configuration' (LSD Standard) **Annex 7A-7 「 Standard for the Use of Limit State Methodologies in the Design of Cargo Containment Systems of Novel Configuration 」**. *(2021)* **【See Guidance】**

428. Guidance notes for Sec 4 (IGC Code 4.28) 【See Guidance】

1. Guidance to detailed calculation of internal pressure for static design purpose

(1) This Article provides guidance for the calculation of the associated dynamic liquid pressure for the purpose of static design calculations. This pressure may be used for determining the internal pressure referred to in **413. 2** (4), where:

(A) $(P_{gd})\max$ is the associated liquid pressure determined using the maximum design accelerations.

(B) $(P_{gd}site)\max$ is the associated liquid pressure determined using site specific accelerations.

(C) P_{eq} should be the greater of P_{eq1} and P_{eq2} calculated as follows:

$$P_{eq1} = P_o + (P_{gd})\max \quad (\mathrm{MPa})$$

$$P_{eq2} = P_h + (P_{gd}\,site)\max \quad (\mathrm{MPa})$$

(2) The internal liquid pressures are those created by the resulting acceleration of the centre of gravity of the cargo due to the motions of the ship referred to in **414. 1**. The value of internal liquid pressure P_{gd} resulting from combined effects of gravity and dynamic accelerations should be calculated as follows:

$$P_{gd} = \alpha_\beta Z_\beta \frac{\rho}{1.02 \times 10^5} \quad (\mathrm{MPa})$$

where:

α_β : dimensionless acceleration (i.e. relative to the acceleration of gravity), resulting from gravitational and dynamic loads, in an arbitrary direction β (see **Fig 7.5.14**).

Z_β : largest liquid height (m) above the point where the pressure is to be determined measured from the tank shell in the β direction (see **Fig 7.5.15**).

Tank domes considered to be part of the accepted total tank volume shall be taken into account when determining Z_β, unless the total volume of tank domes V_d does not exceed the following value:

$$V_d = V_t\left(\frac{100 - FL}{FL}\right)$$

V_t : tank volume without any domes; and

FL : filling limit according to **Sec 15.**

ρ : maximum cargo density ($\mathrm{kg/m^3}$) at the design temperature.

The direction that gives the maximum value $(P_{gd})\max$ or $(P_{gd}\,site)\max$ should be considered.

The above formula applies only to full tanks.

(3) Equivalent calculation procedures may be applied.

2. Guidance formulae for acceleration components

(1) The following formulae are given as guidance for the components of acceleration due to ship's motions corresponding to a probability level of 10^{-8} in the North Atlantic and apply to ships with a length exceeding 50 m and at or near their service speed:

- vertical acceleration, as defined in **414. 1** :

$$a_z = \pm a_0 \sqrt{1 + \left(5.3 - \frac{45}{L}\right)^2 \left(\frac{x}{L} + 0.05\right)^2 \left(\frac{0.6}{C_B}\right)^{1.5} + \left(\frac{0.6yK^{1.5}}{B}\right)^2}$$

- transverse acceleration, as defined in **414. 1** :

$$a_y = \pm a_0 \sqrt{0.6 + 2.5\left(\frac{x}{L_0} + 0.05\right)^2 + K\left(1 + 0.6K\frac{z}{B}\right)^2}$$

- longitudinal acceleration, as defined in **414. 1** :

$$a_x = \pm a_0 \sqrt{0.06 + A^2 - 0.25A}$$

where:

$$a_0 = 0.2\frac{V}{\sqrt{L}} + \frac{34 - \frac{600}{L}}{L}$$

L = length of the ship for determination of scantlings as defined in recognized standards (m);

C_B = block coefficient;

B = greatest moulded breadth of the ship (m);

V = service speed (knots);

x = longitudinal distance (m) from amidships to the centre of gravity of the tank with contents; x is positive forward of amidships, negative aft of amidships;

y = transverse distance (m) from centreline to the centre of gravity of the tank with contents;

z = vertical distance (m) from the ship's actual waterline to the centre of gravity of tank with contents; z is positive above and negative below the waterline;

K = 1 in general. For particular loading conditions and hull forms, determination of K according to the following formula may be necessary:

$K = 13GM/B$, where $K \geq 1$ and GM = metacentric height (m);

$A = \left(0.7 - \frac{L}{1200} + 5\frac{z}{L}\right)\left(\frac{0.6}{C_B}\right)$; and

a_x, a_y and a_z = maximum dimensionless accelerations (i.e. relative to the acceleration of gravity) in the respective directions. They are considered as acting separately for calculation purposes, and a_z does not include the component due to the static weight, a_y includes the component due to the static weight in the transverse direction due to rolling and a_x includes the component due to the static weight in the longitudinal direction due to pitching. The accelerations derived from the above formulae are applicable only to ships at or near their service speed, not while at anchor or otherwise near stationary in exposed locations.

3. Stress categories

(1) For the purpose of stress evaluation, stress categories are defined in this Article as follows.
(2) Normal stress is the component of stress normal to the plane of reference.
(3) Membrane stress is the component of normal stress that is uniformly distributed and equal to the average value of the stress across the thickness of the section under consideration.
(4) Bending stress is the variable stress across the thickness of the section under consideration, after the subtraction of the membrane stress.

(5) Shear stress is the component of the stress acting in the plane of reference.

(6) Primary stress is a stress produced by the imposed loading and which is necessary to balance the external forces and moments. The basic characteristic of a primary stress is that it is not self-limiting. Primary stresses which considerably exceed the yield strength will result in failure or at least in gross deformations.

(7) Primary general membrane stress is a primary membrane stress which is so distributed in the structure that no redistribution of load occurs as a result of yielding.

(8) Primary local membrane stress arises where a membrane stress produced by pressure or other mechanical loading and associated with a primary or a discontinuity effect produces excessive distortion in the transfer of loads for other portions of the structure. Such a stress is classified as a primary local membrane stress although it has some characteristics of a secondary stress. A stress region may be considered as local if :

$$S_1 \leq 0.5\sqrt{Rt}$$

$$S_2 \geq 2.5\sqrt{Rt}$$

where:

S_1 : distance in the meridional direction over which the equivalent stress exceeds 1.1 f

S_2 : distance in the meridional direction to another region where the limits for primary general membrane stress are exceeded

R : mean radius of the vessel

t : wall thickness of the vessel at the location where the primary general membrane stress limit is exceeded

f : allowable primary general membrane stress.

(9) Secondary stress is a normal stress or shear stress developed by constraints of adjacent parts or by self constraint of a structure. The basic characteristic of a secondary stress is that it is self-limiting. Local yielding and minor distortions can satisfy the conditions which cause the stress to occur.

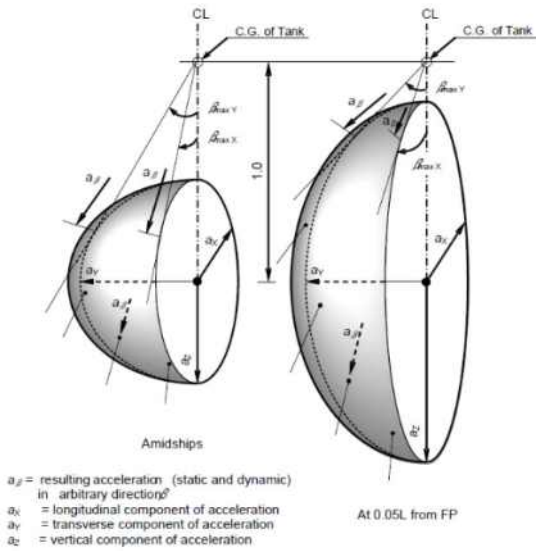

Fig 7.5.14 – Acceleration ellipsoid

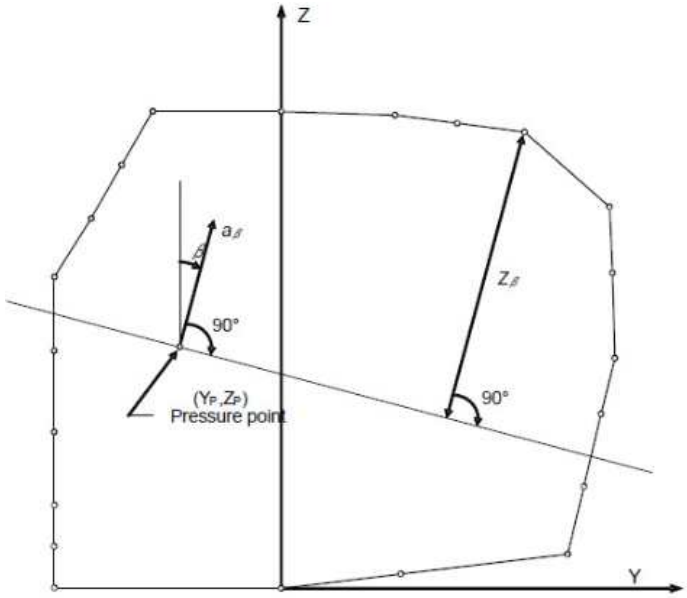

Fig 7.5.15 Determination of internal pressure heads

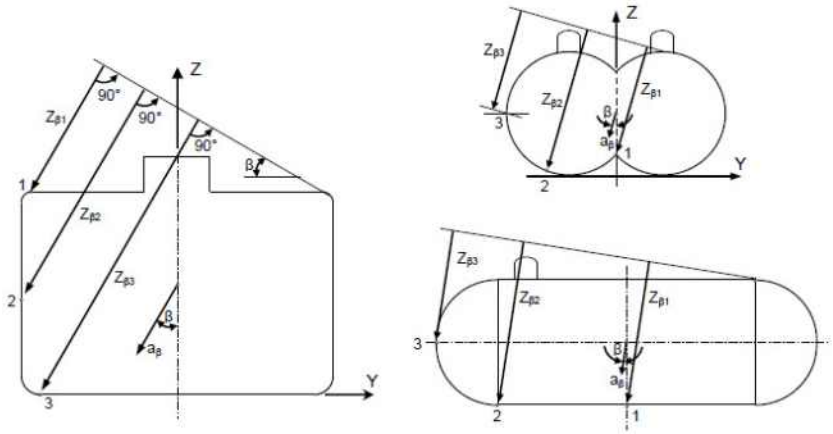

Fig 7.5.16 Determination of liquid height Z_β for points 1,2 and 3

Section 5 Process Pressure Vessels and Liquid, Vapour, and Pressure Piping Systems

501. General (IGC Code 5.1) 【See Guidance】

1. The requirements of this Section are to apply to products and process piping, including vapour piping, gas fuel piping and vent lines of safety valves or similar piping. Auxiliary piping systems not containing cargo are exempt from the general requirements of this chapter.

2. The requirements for type C independent tanks provided in **Sec 4** may also apply to process pressure vessels. If so required, the term "pressure vessels" as used in **Sec 4,** covers both type C independent tanks and process pressure vessels.

3. Process pressure vessels include surge tanks, heat exchangers and accumulators that store or treat liquid or vapour cargo.

502. System requirements (IGC Code 5.2)

1. The cargo handling and cargo control systems are to be designed taking into account the following:

(1) prevention of an abnormal condition escalating to a release of liquid or vapour cargo
(2) the safe collection and disposal of cargo fluids released
(3) prevention of the formation of flammable mixtures
(4) prevention of ignition of flammable liquids or gases and vapours released
(5) limiting the exposure of personnel to fire and other hazards.

2. Arrangements: genera 【See Guidance】

(1) Any piping system that may contain cargo liquid or vapour is to:
(A) be segregated from other piping systems, except where interconnections are required for cargo-related operations such as purging, gas-freeing or inerting. The requirements of **904. 4** are to be taken into account with regard to preventing back-flow of cargo. In such cases, precautions are to be taken to ensure that cargo or cargo vapour cannot enter other piping systems through the interconnections
(B) except as provided in **Sec 16**, not pass through any accommodation space, service space or control station or through a machinery space other than a cargo machinery space
(C) be connected to the cargo containment system directly from the weather decks except where pipes installed in a vertical trunkway or equivalent are used to traverse void spaces above a cargo containment system and except where pipes for drainage, venting or purging traverse cofferdams
(D) be located in the cargo area above the weather deck except for bow or stern loading and unloading arrangements in accordance with **308**, emergency cargo jettisoning piping systems in accordance with **503. 1**, turret compartment systems in accordance with **503. 3** and except in accordance with **Sec 16** and
(E) be located inboard of the transverse tank location requirements of **204. 1**, except for athwartship shore connection piping not subject to internal pressure at sea or emergency cargo jettisoning piping systems.

(2) Suitable means are to be provided to relieve the pressure and remove liquid cargo from loading and discharging crossover headers; likewise, any piping between the outermost manifold valves and loading arms or cargo hoses to the cargo tanks, or other suitable location, prior to disconnection.

(3) Piping systems carrying fluids for direct heating or cooling of cargo are not to be led outside the cargo area unless a suitable means is provided to prevent or detect the migration of cargo vapour outside the cargo area. (see **1306. 2.** (6))

(4) Relief valves discharging liquid cargo from the piping system are to discharge into the cargo tanks. Alternatively, they may discharge to the cargo vent mast, if means are provided to detect and dispose of any liquid cargo that may flow into the vent system. Where required to prevent overpressure in downstream piping, relief valves on cargo pumps are to discharge to the pump suction.

503. Arrangements for cargo piping outside the cargo area (IGC Code 5.3)

1. Emergency cargo jettisoning 【See Guidance】

If fitted, an emergency cargo jettisoning piping system is to comply with **502. 2**, as appropriate, and may be led aft, external to accommodation spaces, service spaces or control stations or machinery spaces, but is not to pass through them. If an emergency cargo jettisoning piping system is permanently installed, a suitable means of isolating the piping system from the cargo piping is to be provided within the cargo area.

2. Bow and stern loading arrangements

(1) Subject to the requirements of **308**, **503.** and **510. 1**, cargo piping may be arranged to permit bow or stern loading and unloading.

(2) Arrangements are to be made to allow such piping to be purged and gas-freed after use. When not in use, the spool pieces are to be removed and the pipe ends blank-flanged. The vent pipes connected with the purge are to be located in the cargo area.

3. Turret compartment transfer systems

For the transfer of liquid or vapour cargo through an internal turret arrangement located outside the cargo area, the piping serving this purpose is to comply with **502. 2**, as applicable, **510. 2** and the following:

(1) piping is to be located above the weather deck, except for the connection to the turret

(2) portable arrangements are not to be permitted; and

(3) arrangements are to be made to allow such piping to be purged and gas-freed after use. When not in use, the spool pieces for isolation from the cargo piping are to be removed and the pipe ends blank-flanged. The vent pipes connected with the purge are to be located in the cargo area.

4. Gas fuel piping systems

Gas fuel piping in machinery spaces is to comply with all applicable sections of this chapter in addition to the requirements of **Sec 16**.

504. Design pressure (IGC Code 5.4)

1. The design pressure P_o, used to determine minimum scantlings of piping and piping system components, is to be not less than the maximum gauge pressure to which the system may be subjected in service. The minimum design pressure used is not to be less than 1 MPa gauge, except for open-ended lines or pressure relief valve discharge lines, where it is to be not less than the lower of 0.5 MPa gauge, or 10 times the relief valve set pressure.

2. The greater of the following design conditions is to be used for piping, piping systems and components, based on the cargoes being carried: 【See Guidance】

(1) for vapour piping systems or components that may be separated from their relief valves and which may contain some liquid, the saturated vapour pressure at a design temperature of 45°C. Higher or lower values may be used (see **413. 2** (2))

(2) for systems or components that may be separated from their relief valves and which contain only vapour at all times, the superheated vapour pressure at 45°C. Higher or lower values may be used (see **413. 2** (2)), assuming an initial condition of saturated vapour in the system at the system operating pressure and temperature.

(3) the MARVS of the cargo tanks and cargo processing systems

(4) the pressure setting of the associated pump or compressor discharge relief valve

(5) the maximum total discharge or loading head of the cargo piping system considering all possible pumping arrangements or the relief valve setting on a pipeline system.

3. Those parts of the liquid piping systems that may be subjected to surge pressures are to be designed to withstand this pressure.

4. The design pressure of the outer pipe or duct of gas fuel systems is not to be less than the maximum working pressure of the inner gas pipe. Alternatively, for gas fuel piping systems with a working pressure greater than 1 MPa, the design pressure of the outer duct is not to be less than the maximum built-up pressure arising in the annular space considering the local instantaneous peak pressure in way of any rupture and the ventilation arrangements.

505. Cargo system valve requirements (IGC Code 5.5)

1. General

(1) Every cargo tank and piping system are to be fitted with manually operated valves for isolation purposes as specified in this section.

(2) In addition, remotely operated valves are also to be fitted, as appropriate, as part of the emergency shutdown (ESD) system the purpose of which is to stop cargo flow or leakage in the event of an emergency when cargo liquid or vapour transfer is in progress. The ESD system is intended to return the cargo system to a safe static condition so that any remedial action can be taken. Due regard is to be given in the design of the ESD system to avoid the generation of surge pressures within the cargo transfer pipework. The equipment to be shut down on ESD activation includes manifold valves during loading or discharge, any pump or compressor, etc., transferring cargo internally or externally (e.g. to shore or another ship/barge) and cargo tank valves, if the MARVS exceeds 0.07 MPa.

2. Cargo tank connections 【See Guidance】

(1) All liquid and vapour connections, except for safety relief valves and liquid level gauging devices, are to have shutoff valves located as close to the tank as practicable. These valves are to provide full closure and are to be capable of local manual operation. They may also be capable of remote operation.

(2) For cargo tanks with a MARVS exceeding 0.07 MPa gauge, the above connections are also to be equipped with remotely controlled ESD valves. These valves are to be located as close to the tank as practicable. A single valve may be substituted for the two separate valves, provided the valve complies with the requirements of **1810. 2** and provides full closure of the line.

3. Cargo manifold connections 【See Guidance】

(1) One remotely controlled ESD valve is to be provided at each cargo transfer connection in use to stop liquid and vapour transfer to or from the ship. Transfer connections not in use are to be isolated with suitable blank flanges.

(2) If the cargo tank MARVS exceeds 0.07 MPa, an additional manual valve is to be provided for each transfer connection in use, and may be inboard or outboard of the ESD valve to suit the ship's design.

4. Excess flow valves may be used in lieu of ESD valves, if the diameter of the protected pipe does not exceed 50 mm. Excess flow valves are to close automatically at the rated closing flow of vapour or liquid as specified by the manufacturer. The piping including fittings, valves and appurtenances protected by an excess flow valve is to have a capacity greater than the rated closing flow of the excess flow valve. Excess flow valves may be designed with a bypass not exceeding the area of a 1 mm diameter circular opening to allow equalization of pressure after a shutdown activation.

5. Cargo tank connections for gauging or measuring devices need not be equipped with excess flow valves or ESD valves, provided that the devices are constructed so that the outward flow of tank contents cannot exceed that passed by a 1.5 mm diameter circular hole.

6. All pipelines or components which may be isolated in a liquid full condition are to be protected with relief valves for thermal expansion and evaporation. 【See Guidance】

7. All pipelines or components which may be isolated automatically due to a fire with a liquid volume of more than 0.05 m^3 entrapped are to be provided with PRVs sized for a fire condition.

506. Cargo transfer arrangements (IGC Code 5.6) 【See Guidance】

1. Where cargo transfer is by means of cargo pumps that are not accessible for repair with the tanks in service, at least two separate means are to be provided to transfer cargo from each cargo tank, and the design is to be such that failure of one cargo pump or means of transfer will not prevent the cargo transfer by another pump or pumps, or other cargo transfer means.

2. The procedure for transfer of cargo by gas pressurization is to preclude lifting of the relief valves during such transfer. Gas pressurization may be accepted as a means of transfer of cargo for those tanks where the design factor of safety is not reduced under the conditions prevailing during the cargo transfer operation. If the cargo tank relief valves or set pressure are changed for this purpose, as it is permitted in accordance with **802. 7 and 802. 8**, the new set pressure is not to exceed P_h as is defined in **413. 2.**

3. Vapour return connections

Connections for vapour return to the shore installations are to be provided.

4. Cargo tank vent piping systems

The pressure relief system is to be connected to a vent piping system designed to minimize the possibility of cargo vapour accumulating on the decks, or entering accommodation spaces, service spaces, control stations and machinery spaces, or other spaces where it may create a dangerous condition.

5. Cargo sampling connections

(1) Connections to cargo piping systems for taking cargo liquid samples are to be clearly marked and are to be designed to minimize the release of cargo vapours. For vessels permitted to carry toxic products, the sampling system is to be of a closed loop design to ensure that cargo liquid and vapour are not vented to atmosphere.

(2) Liquid sampling systems are to be provided with two valves on the sample inlet. One of these valves is to be of the multi-turn type to avoid accidental opening, and is to be spaced far enough apart to ensure that they can isolate the line if there is blockage, by ice or hydrates for example.

(3) On closed loop systems, the valves on the return pipe are also to comply with **(2)**.

(4) The connection to the sample container is to comply with recognized standards and be supported so as to be able to support the weight of a sample container. Threaded connections are to be tack-welded, or otherwise locked, to prevent them being unscrewed during the normal connection and disconnection of sample containers. The sample connection is to be fitted with a closure plug or flange to prevent any leakage when the connection is not in use.

(5) Sample connections used only for vapour samples may be fitted with a single valve in accordance with **505**, **508** and **513**, and are also to be fitted with a closure plug or flange.

(6) Sampling operations are to be undertaken as prescribed in **1809**.

6. Cargo filters

The cargo liquid and vapour systems are to be capable of being fitted with filters to protect against damage by extraneous objects. Such filters may be permanent or temporary, and the standards of filtration are to be appropriate to the risk of debris, etc., entering the cargo system. Means are to be provided to indicate that filters are becoming blocked, and to isolate, depressurize and clean the filters safely.

7. Bunkering systems for delivering LNG bunker to ships using LNG as fuel is to be in accordance with **Annex 7A-3.** *(2021)* **【See Guidance】**

507. Installation requirements (IGC Code 5.7)

1. Design for expansion and contraction

Provision are to be made to protect the piping, piping system and components and cargo tanks from excessive stresses due to thermal movement and from movements of the tank and hull structure. The preferred method outside the cargo tanks is by means of offsets, bends or loops, but multi-layer bellows may be used if offsets, bends or loops are not practicable.

2. Precautions against low temperature 【See Guidance】

Low temperature piping is to be thermally isolated from the adjacent hull structure, where necessary, to prevent the temperature of the hull from falling below the design temperature of the hull material. Where liquid piping is dismantled regularly, or where liquid leakage may be anticipated, such as at shore connections and at pump seals, protection for the hull beneath is to be provided.

3. Water curtain

For cargo temperatures below −110 °C, a water distribution system is to be fitted in way of the hull under the shore connections to provide a low-pressure water curtain for additional protection of the hull steel and the ship's side structure. This system is in addition to the requirements of **1103. 1** (4), and is to be operated when cargo transfer is in progress.

4. Bonding 【See Guidance】

Where tanks or cargo piping and piping equipment are separated from the ship's structure by thermal isolation, provision is to be made for electrically bonding both the piping and the tanks. All gasketed pipe joints and hose connections are to be electrically bonded. Except where bonding straps are used, it is to be demonstrated that the electrical resistance of each joint or connection is less than 1 MΩ.

508. Piping fabrication and joining details (IGC Code 5.8)

1. General 【See Guidance】

The requirements of this Article apply to piping inside and outside the cargo tanks. Relaxation from these requirements may be accepted, in accordance with recognized standards for piping inside cargo tanks and open-ended piping.

2. Direct connections 【See Guidance】

The following direct connection of pipe lengths, without flanges, may be considered:

(1) butt-welded joints with complete penetration at the root may be used in all applications. For design temperatures colder than −10 °C, butt welds are to be either double welded or equivalent to a double welded butt joint. This may be accomplished by use of a backing ring, consumable insert or inert gas backup on the first pass. For design pressures in excess of 1.0 MPa and design temperatures of −10 °C or colder, backing rings are to be removed;

(2) slip-on welded joints with sleeves and related welding, having dimensions in accordance with recognized standards, are only to be used for instrument lines and open-ended lines with an external diameter of 50 mm or less and design temperatures not colder than −55 °C; and

(3) screwed couplings complying with recognized standards are only to be used for accessory lines and instrumentation lines with external diameters of 25 mm or less.

3. Flanged connections 【See Guidance】

(1) Flanges in flanged connections are to be of the welded neck, slip-on or socket welded type.

(2) Flanges are to comply with recognized standards for their type, manufacture and test. For all piping, except open ended, the following restrictions apply:

(A) for design temperatures colder than −55 °C, only welded-neck flanges are to be used.

(B) for design temperatures colder than −10 °C, slip-on flanges are not to be used in nominal sizes above 100 mm and socket welded flanges are not to be used in nominal sizes above 50 mm.

4. Expansion joints

Where bellows and expansion joints are provided in accordance with **507. 1**, the following requirements apply:

(1) if necessary, bellows are to be protected against icing.

(2) slip joints are not to be used except within the cargo tanks.

5. Other connections 【See Guidance】

Piping connections are to be joined in accordance with **2** to **4**, but for other exceptional cases the Society may consider alternative arrangements.

509. Welding, post-weld heat treatment and non-destructive testing (IGC Code 5.9)

1. General

Welding are to be carried out in accordance with **605**.

2. Post-weld heat treatment 【See Guidance】

Post-weld heat treatment id to be required for all butt welds of pipes made with carbon, carbon-manganese and low alloy steels. The Society may waive the requirements for thermal stress relieving of pipes with wall thickness less than 10 mm in relation to the design temperature and pressure of the piping system concerned.

3. Non-destructive testing 【See Guidance】

In addition to normal controls before and during the welding, and to the visual inspection of the finished welds, as necessary for proving that the welding has been carried out correctly and according to the requirements of this paragraph, the following tests are to be required:

(1) 100 % radiographic or ultrasonic inspection of butt-welded joints for piping systems with design temperatures colder than −10 °C, and with inside diameters of more than 75 mm, or wall thicknesses greater than 10 mm;

(2) when such butt-welded joints of piping sections are made by automatic welding procedures approved by the Society, then a progressive reduction in the extent of radiographic or ultrasonic inspection can be agreed, but in no case to less than 10% of each joint. If defects are revealed, the extent of examination is to be increased to 100 % and is to include inspection of previously accepted welds. This approval can only be granted if well-documented quality assurance procedures and records are available to assess the ability of the manufacturer to produce satisfactory welds consistently.

(3) for other butt-welded joints of pipes not covered by (1) and (2), spot radiographic or ultrasonic inspection or other non-destructive tests are to be carried out depending upon service, position and materials. In general, at least 10 % of butt-welded joints of pipes are to be subjected to radiographic or ultrasonic inspection. 【See Guidance】

510. Installation requirements for cargo piping outside the cargo area (IGC Code 5.10)

1. Bow and stern loading arrangements

The following requirements are to apply to cargo piping and related piping equipment located outside the cargo area:

(1) cargo piping and related piping equipment outside the cargo area are to have only welded connections. The piping outside the cargo area is to run on the weather decks and is to be at least 0.8 m inboard, except for athwartships shore connection piping. Such piping is to be clearly identified and fitted with a shutoff valve at its connection to the cargo piping system within the cargo area. At this location, it is also to be capable of being separated by means of a removable spool piece and blank flanges, when not in use.

(2) the piping is to be full penetration butt-welded and subjected to full radiographic or ultrasonic inspection, regardless of pipe diameter and design temperature. Flange connections in the piping are only to be permitted within the cargo area and at the shore connection.

2. Turret compartment transfer systems

The following requirements are to apply to liquid and vapour cargo piping where it is run outside the cargo area:

(1) cargo piping and related piping equipment outside the cargo area are to have only welded connections.

(2) the piping is to be full penetration butt-welded, and subjected to full radiographic or ultrasonic inspection, regardless of pipe diameter and design temperature. Flange connections in the piping are only to be permitted within the cargo area and at connections to cargo hoses and the turret connection.

3. Gas fuel piping

Gas fuel piping, as far as practicable, is to have welded joints. Those parts of the gas fuel piping that are not enclosed in a ventilated pipe or duct according to **1604. 3**, and are on the weather decks outside the cargo area, are to have full penetration butt-welded joints and are to be subjected to full radiographic or ultrasonic inspection.

511. Piping system component requirements (IGC Code 5.11)

1. General

Piping scantlings. Piping systems are to be designed in accordance with recognized standards.

2. Wall thickness of pipes

(1) The following criteria is to be used for determining pipe wall thickness. The wall thickness of pipes is not to be less than:

$$t = \frac{t_0 + b + c}{1 - \frac{a}{100}} \quad (\mathrm{mm})$$

where:

t_0 : theoretical thickness, determined by the following formula:

$$t_0 = \frac{PD}{2Ke + P} \quad (\mathrm{mm})$$

with:

P : design pressure (MPa) referred to in **504.**

D : outside diameter (mm)

K : allowable stress ($\mathrm{N/mm^2}$) referred to in **3**

e : efficiency factor equal to 1.0 for seamless pipes and for longitudinally or spirally welded pipes, delivered by approved manufacturers of welded pipes, that are considered equivalent to seamless pipes when non-destructive testing on welds is carried out in accordance with Recognized Standards. In other cases an efficiency factor of less than 1.0, in accordance with recognized standards, may be required, depending on the manufacturing process.

b : allowance for bending (mm). The value of b is to be chosen so that the calculated stress in the bend, due to internal pressure only, does not exceed the allowable stress. Where such justification is not given, b should be:

$$b = \frac{Dt_0}{2.5r} \quad (\mathrm{mm})$$

with :

r : mean radius of the bend (mm)

c : corrosion allowance (mm). If corrosion or erosion is expected, the wall thickness of the piping is to be increased over that required by other design requirements. The allowance is to be consistent with the expected life of the piping and

a : negative manufacturing tolerance of thickness (%).

(2) The minimum wall thickness is to be in accordance with recognized standards.

(3) Where necessary for mechanical strength to prevent damage, collapse, excessive sag or buckling of pipes due to superimposed loads, the wall thickness is to be increased over that required by (1) or, if this is impracticable or would cause excessive local stresses, these loads may be reduced, protected against or eliminated by other design methods. Such superimposed loads may be due to: supporting structures, ship deflections, liquid pressure surge during transfer operations, the weight of suspended valves, reaction to loading arm connections, or otherwise.

3. Allowable stress

(1) For pipes, the allowable stress K referred to in the formula in **Par 2** is the lower of the following values:

$$R_m/A \quad \text{or} \quad R_e/B$$

where:

R_m : specified minimum tensile strength at room temperature ($\mathrm{N/mm^2}$)

R_e : specified minimum yield stress at room temperature ($\mathrm{N/mm^2}$)

If the stress-strain curve does not show a defined yield stress, the 0.2 % proof stress applies.

The values of A and B are to be shown on the International Certificate of Fitness for the Carriage of Liquefied Gases in Bulk and have values of at least A = 2.7 and B = 1.8.

4. High-pressure gas fuel outer pipes or ducting scantlings

In fuel gas piping systems of design pressure greater than the critical pressure, the tangential membrane stress of a straight section of pipe or ducting is not to exceed the tensile strength divided by 1.5 ($R_m/1.5$) when subjected to the design pressure specified in **504**. The pressure ratings of all other piping components are to reflect the same level of strength as straight pipes.

5. Stress analysis 【See Guidance】

When the design temperature is −110 °C or lower, a complete stress analysis, taking into account all the stresses due to the weight of pipes, including acceleration loads if significant, internal pressure, thermal contraction and loads induced by hog and sag of the ship for each branch of the piping system are to be submitted to the Society. For temperatures above −110 °C, a stress analysis may be required by the Society in relation to such matters as the design or stiffness of the piping system and the choice of materials. In any case, consideration is to be given to thermal stresses even though calculations are not submitted. The analysis may be carried out according to a code of practice acceptable to the Society.

6. Flanges, valves and fittings 【See Guidance】

(1) Flanges, valves and other fittings are to comply with recognized standards, taking into account the material selected and the design pressure defined in **504**. For bellows expansion joints used in vapour service, a lower minimum design pressure may be accepted.

(2) For flanges not complying with a recognized standard, the dimensions of flanges and related bolts are to be to the satisfaction of the Society.

(3) All emergency shutdown valves are to be of the "fail closed" type. (see **513. 1** (1) and **1810. 2**)

(4) The design and installation of expansion bellows are to be in accordance with recognized standards and be fitted with means to prevent damage due to over-extension or compression.

7. Ship's cargo hoses

(1) Liquid and vapour hoses used for cargo transfer are to be compatible with the cargo and suitable for the cargo temperature.

(2) Hoses subject to tank pressure, or the discharge pressure of pumps or vapour compressors, are to be designed for a bursting pressure not less than five times the maximum pressure the hose will be subjected to during cargo transfer.

(3) Each new type of cargo hose, complete with end-fittings, is to be type approved in accordance with the procedure as deemed appropriate by the Society. *(2019)*

(4) Production test

Hoses used for type testing are not to be used for cargo service. Thereafter, before being placed in service, each new length of cargo hose produced is to be hydrostatically tested at ambient temperature to a pressure not less than 1.5 times its specified maximum working pressure, but not more than two fifths of its bursting pressure. The hose is to be stencilled, or otherwise marked, with the date of testing, its specified maximum working pressure and, if used in services other than ambient temperature services, its maximum and minimum service temperature, as applicable. The specified maximum working pressure is not to be less than 1.0 MPa gauge.

512. Materials (IGC Code 5.12) 【See Guidance】

1. The choice and testing of materials used in piping systems are to comply with the requirements of **Sec. 6**, taking into account the minimum design temperature. However, some relaxation may be permitted in the quality of material of open-ended vent piping, provided that the temperature of the cargo at the pressure relief valve setting is not lower than −55 °C, and provided that no liquid discharge to the vent piping can occur. Similar relaxations may be permitted under the same temperature conditions to open-ended piping inside cargo tanks, excluding discharge piping and all piping inside membrane and semi-membrane tanks.

2. Materials having a melting point below 925 °C are not to be used for piping outside the cargo tanks except for short lengths of pipes attached to the cargo tanks, in which case fire-resisting insulation is to be provided.

3. For an outer pipe or duct equipped with mechanical exhaust ventilation having a capacity of at least 30 air changes per hour, the effects of both pressure and possible low temperature in the event of a high pressure line failure are to be taking into account.

4. **Cargo piping insulation system**
   (1) Cargo piping systems are to be provided with a thermal insulation system as required to minimize heat leak into the cargo during transfer operations and to protect personnel from direct contact with cold surfaces.
   (2) Where applicable, due to location or environmental conditions, insulation materials are to have suitable properties of resistance to fire and flame spread and are to be adequately protected against penetration of water vapour and mechanical damage.

5. Where the cargo piping system is of a material susceptible to stress corrosion cracking in the presence of a salt-laden atmosphere, adequate measures to avoid this occurring are to be taken by considering material selection, protection of exposure to salty water and/or readiness for inspection.

513. Testing requirements (IGC Code 5.13)

1. **Testing of piping components** 【See Guidance】
   (1) Valves
      (A) Type test
         (a) Valves intended to be used at a working temperature below −55°C are to be type approved in accordance with the procedure as deemed appropriate by the Society.
         (b) For valves intended to be used at a working temperature above −55°C, type approval is not required.
      (B) Production tests
         All valves are to be tested at the plant of manufacturer in the presence of the Surveyor including the following.
         (a) Hydrostatic test of the valve body at a pressure equal to 1.5 times the design pressure for all valves.
         (b) Seat and stem leakage test at a pressure equal to 1.1 times the design pressure for valves other than safety valves. In addition, cryogenic testing consisting of valve operation and leakage verification at design temperature for a minimum of 10% of each type and size of valve for valves other than safety valves intended to be used at a working temperature below −55°C.
         (c) The set pressure of safety valves is to be tested at ambient temperature.
      (C) The manufacturer may request the Society to waive the tests required in above (B) subject to the following.
         (a) The valve has been type approved as required by (A) for valves intended to be used at a working temperature below −55°C
         (b) The manufacturer has a recognized quality system that has been assessed and certified by the Society subject to periodic audits
         (c) The quality control plan contains a provision to subject the following and the manufacturer is to maintain records of such tests
            (i) Each valve to a hydrostatic test of the valve body at a pressure equal to 1.5 times the design pressure for all valves.
            (ii) Seat and stem leakage test at a pressure equal to 1.1 times the design pressure for valves other than safety valves.
            (iii) The set pressure of safety valves is to be tested at ambient temperature.
         (d) Cryogenic testing consisting of valve operation and leakage verification at the design temperature for a minimum of 10 % of each type and size of valve for valves other than safety valves intended to be used at a working temperature below −55 °C in the presence of the Society' representative.
   (2) Expansion bellows
      Expansion bellows intended for use on cargo piping outside the cargo tank and, where required, on those expansion bellows installed within the cargo tanks is to be type approved in accordance with the procedure as deemed appropriate by the Society.
   (3) Cargo Pumps
      (A) Pumps are to be type approved in accordance with the procedure as deemed appropriate by the Society.

(B) Production tests
All pumps which have been type approved are subject to the tests of following (a) and (b) at the plant of manufacturer in the presence of the Surveyor.
(a) hydrostatic test of the pump body equal to 1.5 times the design pressure
(b) the capacity tests in compliance with the following
(i) For submerged pumps, the capacity test is to be carried out with the design medium or with a medium below the minimum working temperature.
(ii) For deep well pumps, the capacity test may be carried out with water.

(C) The manufacturer may request the Society to waive the tests required in above (B) subject to the following:
(a) The pump has been type approved as required by **513. 1** (3) (A)
(b) The manufacturer has a recognised quality system that has been assessed and certified by the Society subject to periodic audits
(c) The quality control plan contains a provision to subject each pump to a hydrostatic test of the pump body equal to 1.5 times the design pressure and a capacity test. The manufacturer is to maintain records of such tests.

(4) Gas Cargo and Reliquefication/Refrigeration Compressors
(A) Gas Cargo and Reliquefication/Refrigeration Compressors are to be type approved in accordance with the procedure as deemed appropriate by the Society.
(B) Production tests
Each compressor which has been type approved is to be tested at the plant of manufacture in the presence of the Surveyor including the following.
(a) Testing is to include hydrostatic test of the compressor pressure boundary components.
(b) The hydrostatic test is to be carried out at a pressure equal to 1.5 times the design pressure (or 1.25 times the design pressure where the test fluid is compressible) and for, at least, 30 minutes.
(C) The manufacturer may request the Society to waive the tests required in above (B) subject to the following:
(a) The compressor has been type approved as required by **513. 1** (4) (A).
(b) The manufacturer has a recognised quality system that has been assessed and certified by the Society subject to periodic audits.
(c) The quality control plan contains a provision to subject each compressor to the hydrostatic test of the compressor body equal to 1.5 times the design pressure (or 1.25 times the design pressure where the test fluid is compressible) for, at least, 30 minutes, and a mechanical running and performance test. The manufacturer is to maintain records of such tests.

2. System testing requirements 【See Guidance】

(1) The requirements of this Article are to apply to piping inside and outside the cargo tanks.
(2) After assembly, all cargo and process piping are to be subjected to a strength test with a suitable fluid. The test pressure is to be at least 1.5 times the design pressure (1.25 times the design pressure where the test fluid is compressible) for liquid lines and 1.5 times the maximum system working pressure (1.25 times the maximum system working pressure where the test fluid is compressible) for vapour lines. When piping systems or parts of systems are completely manufactured and equipped with all fittings, the test may be conducted prior to installation on board the ship. Joints welded on board are to be tested to at least 1.5 times the design pressure.
(3) After assembly on board, each cargo and process piping system are to be subjected to a leak test using air, or other suitable medium, to a pressure depending on the leak detection method applied.
(4) In double wall gas-fuel piping systems, the outer pipe or duct is also to be pressure tested to show that it can withstand the expected maximum pressure at gas pipe rupture.
(5) All piping systems, including valves, fittings and associated equipment for handling cargo or vapours, are to be tested under normal operating conditions not later than at the first loading operation, in accordance with recognized standards.

3. Emergency shutdown valves

The closing characteristics of emergency shutdown valves used in liquid cargo piping systems are to be tested to demonstrate compliance with **1810. 2** (1) (C). This testing may be carried out on board after installation.

Section 6 Materials of Construction and Quality Control

601. Definitions (IGC Code 6.1)

1. Where reference is made in this Section to A, B, D, E, AH, DH, EH and FH hull structural steels, these steel grades are hull structural steels according to **Pt 2** of the Rules.
2. A piece is the rolled product from a single slab or billet or from a single ingot, if this is rolled directly into plates, strips, sections or bars.
3. A batch is the number of items or pieces to be accepted or rejected together, on the basis of the tests to be carried out on a sampling basis. The size of a batch is given in **Pt 2** of the Rules.
4. Controlled rolling (CR) is a rolling procedure in which the final deformation is carried out in the normalizing temperature range, resulting in a material condition generally equivalent to that obtained by normalizing.
5. Thermo-mechanical controlled processing (TMCP) is a procedure that involves strict control of both the steel temperature and the rolling reduction. Unlike CR, the properties conferred by TMCP cannot be reproduced by subsequent normalizing or other heat treatment. The use of accelerated cooling on completion of TMCP may also be accepted, subject to approval by the Society. The same applies for the use of tempering after completion of TMCP.
6. Accelerated cooling (AcC) is a process that aims to improve mechanical properties by controlled cooling with rates higher than air cooling, immediately after the final TMCP operation. Direct quenching is excluded from accelerated cooling. The material properties conferred by TMCP and AcC cannot be reproduced by subsequent normalizing or other heat treatment.

602. Scope and general requirements (IGC Code 6.2)

1. This Section gives the requirements for metallic and non-metallic materials used in the construction of the cargo system. This includes requirements for joining processes, production process, personnel qualification, NDT and inspection and testing including production testing. The requirements for rolled materials, forgings and castings are given in **604.** and **Tables 7.5.4** to **7.5.8**. The requirements for weldments are given in **605.** and the requirements for non-metallic materials are given in **Annex 「 7A-6 Non-Metallic Materials 」.** A quality assurance/quality control programme shall be implemented to ensure that the requirements of **602.** are complied with.
2. The manufacture, testing, inspection and documentation shall be in accordance with **Pt 2** of the Rules and the specific requirements given in this Chapter.
3. Where post-weld heat treatment is specified or required, the properties of the base material shall be determined in the heat-treated condition, in accordance with the applicable table of this Section, and the weld properties shall be determined in the heat treated condition in accordance with **605**. In cases where a post-weld heat treatment is applied, the test requirements may be modified at the discretion of the Society.

603. General test requirements and specifications (IGC Code 6.3) 【See Guidance】

1. **Tensile test**
   (1) Tensile testing shall be carried out in accordance with recognized standards.
   (2) Tensile strength, yield stress and elongation shall be to the satisfaction of the Society. For carbon-manganese steel and other materials with definitive yield points, consideration shall be given to the limitation of the yield to tensile ratio.
2. **Toughness test**
   (1) Acceptance tests for metallic materials shall include Charpy V-notch toughness tests, unless otherwise specified by the Society. The specified Charpy V-notch requirements are minimum average energy values for three full size (10 mm × 10 mm) specimens and minimum single energy values for individual specimens. Dimensions and tolerances of Charpy V-notch specimens shall be in accordance with **Pt 2, Ch 1 Sec 2** of the Rules. The testing and requirements for specimens smaller than 5 mm in size shall be in accordance with recognized standards. Minimum average values for subsized specimens shall be:

Charpy V-notch specimen size	Minimum average energy of three specimens
10 mm x 10 mm	KV
10 mm x 7.5 mm	5/6 KV
10 mm x 5.0 mm	2/3 KV
where: KV = the energy values (J) specified in **Tables 7.5.4** to **7.5.7**	

Only one individual value may be below the specified average value, provided it is not less than 70 % of that value.

(2) For base metal, the largest size Charpy V-notch specimens possible for the material thickness shall be machined with the specimens located as near as practicable to a point midway between the surface and the centre of the thickness and the length of the notch perpendicular to the surface as shown in **Fig 7.5.17**.

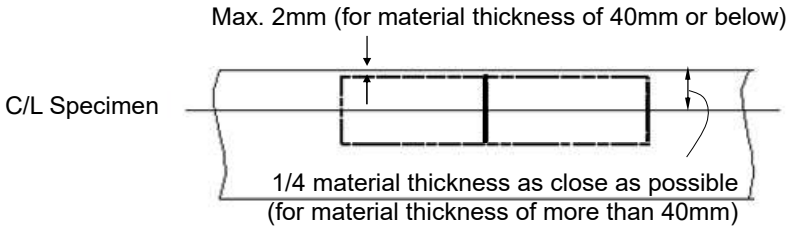

Fig 7.5.17 Orientation of base metal test specimen

(3) For a weld test specimen, the largest size Charpy V-notch specimens possible for the material thickness shall be machined, with the specimens located as near as practicable to a point mid-way between the surface and the centre of the thickness. In all cases, the distance from the surface of the material to the edge of the specimen shall be approximately 1 mm or greater. In addition, for double-V butt welds, specimens shall be machined closer to the surface of the second welded section. The specimens shall be taken generally at each of the following locations, as shown in **Fig 7.5.18**, on the centreline of the welds, the fusion line and 1 mm, 3 mm and 5 mm from the fusion line.

(4) If the average value of the three initial Charpy V-notch specimens fails to meet the stated requirements, or the value for more than one specimen is below the required average value, or when the value for one specimen is below the minimum value permitted for a single specimen, three additional specimens from the same material may be tested and the results be combined with those previously obtained to form a new average. If this new average complies with the requirements and if no more than two individual results are lower than the required average and no more than one result is lower than the required value for a single specimen, the piece or batch may be accepted.

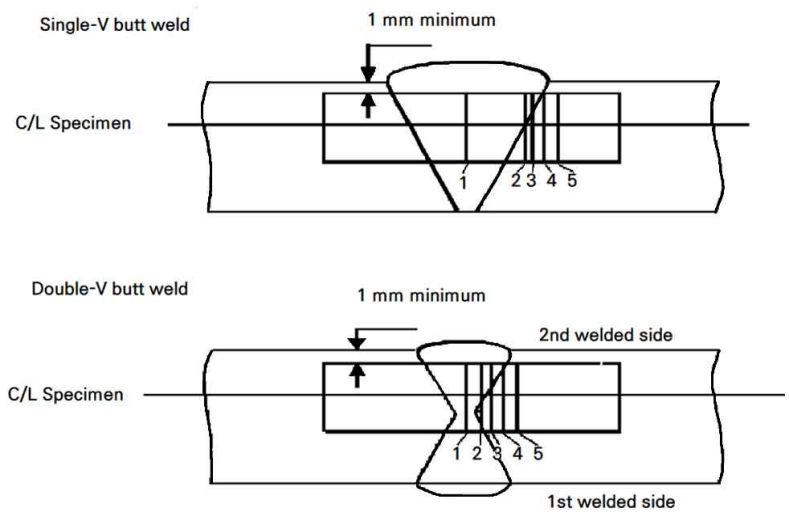

Fig 7.5.18 Orientation of Weld Test Specimen

3. Bend test

(1) The bend test may be omitted as a material acceptance test, but is required for weld tests. Where a bend test is performed, this shall be done in accordance with **Pt 2, Ch 2** of the Rule.

(2) The bend tests shall be transverse bend tests, which may be face, root or side bends at the discretion of the Society. However, longitudinal bend tests may be required in lieu of transverse bend tests in cases where the base material and weld metal have different strength levels.

4. Section observation and other testing

Macrosection, microsection observations and hardness tests may also be required by the Society, and they shall be carried out in accordance with Rule **Pt 2, Ch 2** of the Rule, where required.

604. Requirements for metallic materials (IGC Code 6.4)

1. General requirements for metallic materials *(2022)*

The requirements for materials of construction are shown in the tables as follows:

Table 7.5.4 : Plates, pipes (seamless and welded), sections and forgings for cargo tanks and process pressure vessels for design temperatures not lower than 0 °C.

Table 7.5.5a : Plates, sections and forgings for cargo tanks, secondary barriers and process pressure vessels for design temperatures below 0 °C and down to −10 °C.

Table 7.5.5b : Plates, sections and forgings for cargo tanks, secondary barriers and process pressure vessels for design temperatures below −10 °C and down to −55 °C.

Table 7.5.6 : Plates, sections and forgings for cargo tanks, secondary barriers and process pressure vessels for design temperatures below −55 °C and down to −165 °C.

Table 7.5.7 : Pipes (seamless and welded), forgings and castings for cargo and process piping for design temperatures below 0 °C and down to −165 °C.

Table 7.5.8 : Plates and sections for hull structures required by **419. 1** (2) and **419. 1** (3).

For cargo tanks using high manganese austenitic steel for cryogenic service, **Annex 7A-4 「High manganese austenitic steel for Cryogenic Service」** should be applied. *(2021)* **【See Guidance】**

Table 7.5.4 PLATES, PIPES (SEAMLESS AND WELDED)(1)(2), SECTIONS AND FORGINGS FOR CARGO TANKS AND PROCESS PRESSURE VESSELS FOR DESIGN TEMPERATURES NOT LOWER THAN 0 °C. *(2022)* 【See Guidance】

1. CHEMICAL COMPOSITION AND HEAT TREATMENT		
– Carbon–manganese steel – Fully killed fine grain steel – Small additions of alloying elements by agreement with the Society – Composition limits to be approved by the Society – Normalized, or quenched and tempered(4)		
2. TENSILE AND TOUGHNESS (IMPACT) TEST REQUIREMENTS		
2.1 frequency		
Plates	Each "piece" to be tested	
Sections and forgings	Each "batch" to be tested	
2.2 Mechanical properties		
Tensile properties	Specified minimum yield stress not to exceed 410 $\mathrm{N/mm^2}$ (5)	
2.3 Toughness (Charpy V–notch test)		
Plates	Transverse test pieces. Minimum average energy value (KV) 27J	
Sections and forgings	Longitudinal test pieces. Minimum average energy value (KV) 41J	
Test temperature	Thickness t (mm)	Test temperature (°C)
	$t \leq 20$	0
	$20 < t \leq 40$	-20
	$40 < t \leq 50$(6)	-20(7)
	$40 < t \leq 50$(6)	-30(8)

Notes:
(1) For seamless pipes and fittings normal practice applies. The use of longitudinally and spirally welded pipes shall be specially approved by the Society.
(2) Charpy V–notch impact tests are not required for pipes.
(3) This table is generally applicable for material thicknesses up to 50 mm. Proposals for greater thicknesses shall be approved by the Society.
(4) A controlled rolling procedure or TMCP may be used as an alternative.
(5) Materials with specified minimum yield stress exceeding 410 $\mathrm{N/mm^2}$ may be specially approved by the Society. For these materials, particular attention shall be given to the hardness of the welded and heat affected zone.
(6) A further set of impact test at mid thickness for products with t〉40mm is required except rolled steels for hull structural in Rules Part 2, Chapter 1, 301 or high strength steels for welded structures in Rules Part 2, Chapter 1, 308.
(7) Applies to type C independent tanks and process pressure vessels. In addition, post–weld stress relief heat treatment shall be performed. Exemption to post–weld stress relief heat treatment based on alternative approach (e.g. Engineering Critical Assessment) shall be approved by the Classification Society or shall be to recognized standards.
(8) Applies to cargo tank other than type C.

Table 7.5.5a PLATES, SECTIONS AND FORGINGS(1) FOR CARGO TANKS, SECONDARY BARRIERS AND PROCESS PRESSURE VESSELS FOR DESIGN TEMPERATURES BELOW 0°C AND DOWN TO -10°C Maximum thickness 25 mm(2) *(2022)* 【See Guidance】

1. CHEMICAL COMPOSITION AND HEAT TREATMENT

- Carbon-manganese steel
- Fully killed, aluminium treated fine grain steel
- Chemical composition (ladle analysis)

C	Mn	Si	S	P
0.16 % max.(3)	0.70 ~ 1.60 %	0.10-0.50 %	0.025 % max.	0.025 % max.

- Optional additions: Alloys and grain refining elements may be generally in accordance with the following:

Ni	Cr	Mo	Cu	Nb	V
0.80 % max.	0.25 % max.	0.08 % max.	0.35 % max	0.05 % max.	0.10 % max.

- Al content total 0.02% min (Acid soluble 0.015% min)
- Normalized or quenched and tempered(4)

2. TENSILE AND TOUGHNESS (IMPACT) TEST REQUIREMENTS

2.1 Sampling frequency

Plates	Each "piece" to be tested
Sections and forgings	Each "batch" to be tested

2.2 Mechanical properties

Tensile properties	Specified minimum yield stress not to exceed 410 N/mm^2 (5)

2.3 Toughness (Charpy V-notch test)

Plates	Transverse test pieces. Minimum average energy value (KV) 27J
Sections and forgings	Longitudinal test pieces. Minimum average energy value (KV) 41J
Test temperature	5°C below the design temperature or -20°C whichever is lower

Notes:

(1) The Charpy V-notch and chemistry requirements for forgings may be specially considered by the Society.

(2) For material thickness of more than 25 mm, Charpy V-notch tests shall be conducted as follows:

Material thickness (mm)	Test temperature (°C)
$25 < t \leq 30$	10°C below design temperature or -20°C, whichever is lower
$30 < t \leq 35$	15°C below design temperature or -20°C, whichever is lower
$35 < t \leq 40$	20°C below design temperature
$40 < t \leq 50$(6)	5°C below design temperature or -20°C, whichever is lower(7)
$40 < t \leq 45$(6)	25°C below design temperature(8)
$45 < t \leq 50$(6)	30°C below design temperature(8)

The impact energy value shall be in accordance with the table for the applicable type of test specimen. Materials for tanks and parts of tanks which are completely thermally stress relieved after welding may be tested at a temperature 5°C below design temperature or -20°C, whichever is lower.

For thermally stress relieved reinforcements and other fittings, the test temperature shall be the same as that required for the adjacent tank-shell thickness.

(3) By special agreement with the Society, the carbon content may be increased to 0.18 % maximum, provided the design temperature is not lower than −40°C.

(4) A controlled rolling procedure or TMCP may be used as an alternative.

(5) Materials with specified minimum yield stress exceeding 410 N/mm^2 may be approved by the Society. For these materials, particular attention shall be given to the welded and heat affected zones.

Guidance:

For materials exceeding 25 mm in thickness for which the test temperature is −60 °C or lower, the application of specially treated steels or steels in accordance with **Table 7.5.6** may be necessary.

(6) A further set of impact test at mid thickness for products with t>40mm is required except rolled steels for hull structural in Rules Part 2, Chapter 1, 301 or high strength steels for welded structures in Rules Part 2, Chapter 1, 308.

(7) Applies to type C independent tanks and process pressure vessels. In addition, post-weld stress relief heat treatment shall be performed. Exemption to post-weld stress relief heat treatment based on alternative approach (e.g. Engineering Critical Assessment) shall be approved by the Classification Society or shall be to recognized standards.

(8) Applies to cargo tank other than type C.

(9) This table is generally applicable for material thicknesses up to 50mm. Proposals for greater thicknesses shall be approved by the Society.

Table 7.5.5b PLATES, SECTIONS AND FORGINGS(1) FOR CARGO TANKS, SECONDARY BARRIERS AND PROCESS PRESSURE VESSELS FOR DESIGN TEMPERATURES BELOW −10°C AND DOWN TO −55°C Maximum thickness 25 mm(2) *(2022)* 【See Guidance】

1. CHEMICAL COMPOSITION AND HEAT TREATMENT

- Carbon-manganese steel
- Fully killed, aluminium treated fine grain steel
- Chemical composition (ladle analysis)

C	Mn	Si	S	P
0.16 % max.(3)	0.70 ~ 1.60 %	0.10-0.50 %	0.025 % max.	0.025 % max.

- Optional additions: Alloys and grain refining elements may be generally in accordance with the following:

Ni	Cr	Mo	Cu	Nb	V
0.80 % max.	0.25 % max.	0.08 % max.	0.35 % max	0.05 % max.	0.10 % max.

- Al content total 0.02% min (Acid soluble 0.015% min)
- Normalized or quenched and tempered(4)

2. TENSILE AND TOUGHNESS (IMPACT) TEST REQUIREMENTS

2.1 Sampling frequency

Plates	Each "piece" to be tested
Sections and forgings	Each "batch" to be tested

2.2 Mechanical properties

Tensile properties	Specified minimum yield stress not to exceed 410 N/mm^2 (5)

2.3 Toughness (Charpy V-notch test)

Plates	Transverse test pieces. Minimum average energy value (KV) 27J
Sections and forgings	Longitudinal test pieces. Minimum average energy value (KV) 41J
Test temperature	5°C below the design temperature or −20°C whichever is lower

Notes:

(1) The Charpy V-notch and chemistry requirements for forgings may be specially considered by the Society.

(2) For material thickness of more than 25 mm, Charpy V-notch tests shall be conducted as follows:

Material thickness (mm)	Test temperature (°C)
$25 < t \leq 30$	10°C below design temperature or −20°C, whichever is lower
$30 < t \leq 35$	15°C below design temperature or −20°C, whichever is lower
$35 < t \leq 40$	20°C below design temperature
$40 < t \leq 50$(6)	5°C below design temperature or −20°C, whichever is lower(7)
$40 < t \leq 45$(6)	25°C below design temperature(8)
$45 < t \leq 50$(6)	30°C below design temperature(8)

The impact energy value shall be in accordance with the table for the applicable type of test specimen. Materials for tanks and parts of tanks which are completely thermally stress relieved after welding may be tested at a temperature 5°C below design temperature or −20°C, whichever is lower.

For thermally stress relieved reinforcements and other fittings, the test temperature shall be the same as that required for the adjacent tank-shell thickness.

(3) By special agreement with the Society, the carbon content may be increased to 0.18 % maximum, provided the design temperature is not lower than −40°C.

(4) A controlled rolling procedure or TMCP may be used as an alternative.

(5) Materials with specified minimum yield stress exceeding 410 N/mm^2 may be approved by the Society. For these materials, particular attention shall be given to the welded and heat affected zones.

Guidance:

For materials exceeding 25 mm in thickness for which the test temperature is −60 °C or lower, the application of specially treated steels or steels in accordance with **Table 7.5.6** may be necessary.

(6) A further set of impact test at mid thickness for products with t>40mm is required except rolled steels for hull structural in Rules Part 2, Chapter 1, 301 or high strength steels for welded structures in Rules Part 2, Chapter 1, 308.

(7) 606. 2 (2) applies with regards to post-weld stress relief heat treatment. Exemption to post-weld stress relief heat treatment based on alternative approach(e.g. Engineering Critical Assessment) shall be approved by the Society or shall be to recognized standards.

(8) Applies to cargo tank other than type C.

(9) This table is generally applicable for material thicknesses up to 50mm. Proposals for greater thicknesses shall be approved by the Society.

Table 7.5.6 PLATES, SECTIONS AND FORGINGS(1) FOR CARGO TANKS, SECONDARY BARRIERS AND PROCESS PRESSURE VESSELS FOR DESIGN TEMPERATURES BELOW −55°C AND DOWN TO −165°C(2) Maximum thickness 25 mm(3)(4) *(2022)* 【See Guidance】

Minimum design temp. (°C)	Chemical composition(5) and heat treatment	Impact test temp.(°C)
−60	1.5 % nickel steel – normalized or normalized and tempered or quenched and tempered or TMCP(6)	−65
−65	2.25 % nickel steel – normalized or normalized and tempered or quenched and tempered or TMCP(6)(7)	−70
−90	3.5 % nickel steel – normalized or normalized and tempered or quenched and tempered or TMCP(6)(7)	−95
−105	5 % nickel steel – normalized or normalized and tempered or quenched and tempered or TMCP(6)(7)	−110
−165	9 % nickel steel – double normalized and tempered or quenched and tempered(6)	−196
−165	Austenitic steels, such as types 304, 304 L, 316, 316 L, 321 and 347 solution treated(9)	−196
−165	Aluminium alloys; such as type 5083 annealed	Not required
−165	Austenitic Fe–Ni alloy (36 % nickel). Heat treatment as agreed	Not required

1. TENSILE AND TOUGHNESS (IMPACT) TEST REQUIREMENTS

1.1 Sampling frequency

Plates	Each "piece" to be tested
Sections and forgings	Each "batch" to be tested

1.2 Toughness (Charpy V-notch test)

Plates	Transverse test pieces. Minimum average energy value (KV) 27J
Sections and forgings	Longitudinal test pieces. Minimum average energy value (KV) 41J

Notes:

(1) The impact test required for forgings used in critical applications shall be subject to special consideration by the Society.

(2) The requirements for design temperatures below −165°C shall be specially agreed with the Society.

(3) For materials 1.5 % Ni, 2.25 % Ni, 3.5 % Ni and 5 % Ni, with thicknesses greater than 25 mm, the impact tests shall be conducted as follows:

Material thickness (mm)	Test temperature
$25 < t \leq 30$	10°C below design temperature
$30 < t \leq 35$	15°C below design temperature
$35 < t \leq 40$	20°C below design temperature
$40 < t \leq 45$(10)	25°C below design temperature
$45 < t \leq 50$(10)	30°C below design temperature

The energy value shall be in accordance with the table for the applicable type of test specimen. For material thickness of more than 50 mm, the Charpy V-notch values shall be specially considered.

(4) For 9 % Ni, austenitic stainless steels and aluminium alloys, thicknesses greater than 25 mm may be used.
(5) The chemical composition limits shall be in accordance with **Pt 2 Ch 1** or standards deemed appropriate by the our Society.
(6) TMCP nickel steels will be subject to acceptance by the Society.
(7) A lower minimum design temperature for quenched and tempered steels may be specially agreed with the Society.
(8) A specially heat treated 5 % nickel steel, for example triple heat treated 5 % nickel steel, may be used down to −165°C, provided that the impact tests are carried out at −196°C.
(9) The impact test may be omitted, subject to agreement with the Society.
(10) A further set of impact test at mid thickness for products with t>40mm is required except rolled steels for hull structural in Rules Part 2, Chapter 1, 301 or high strength steels for welded structures in Rules Part 2, Chapter 1, 308.
(11) This table is generally applicable for material thicknesses up to 50mm. Proposals for greater thicknesses shall be approved by the Society.

Table 7.5.7 PIPES (SEAMLESS AND WELDED)(1), FORGINGS(2) AND CASTINGS(2) FOR CARGO AND PROCESS PIPING FOR DESIGN TEMPERATURES BELOW 0°C AND DOWN TO −165°C(3) Maximum thickness 25 mm 【See Guidance】

Minimum design temp. (°C)	Chemical composition(5) and heat treatment	Impact test	
		Test temp.(°C)	Minimum average energy (KV)(J)
−55	Carbon-manganese steel. Fully killed fine grain. Normalized or as agreed(6)	(4)	27
−65	2.25 % nickel steel. Normalized or normalized and tempered or quenched and tempered(6)	−70	34
−90	3.5 % nickel steel. Normalized or normalized and tempered or quenched and tempered(6)	−95	34
−165	9 % nickel steel(7). Double normalized and tempered or quenched and tempered	−196	41
	Austenitic steels, such as types 304, 304 L, 316, 316 L, 321 and 347. Solution treated(8)	−196	41
	Aluminium alloys, such as type 5083 annealed	−	Not required
1. TENSILE AND TOUGHNESS (IMPACT) TEST REQUIREMENTS			
1.1 Sampling frequency			
− Each batch to be tested			
1.2 Toughness (Charpy V-notch test)			
− Impact test: Longitudinal test pieces			

Notes:
(1) The use of longitudinally or spirally welded pipes shall be specially approved by the Society.
(2) The requirements for forgings and castings may be subject to special consideration by the Society.
(3) The requirements for design temperatures below−165°C shall be specially agreed with the Society.
(4) The test temperature shall be 5°C below the design temperature or −20°C, whichever is lower.
(5) The composition limits shall be in accordance with **Pt 2 Ch 1** or standards deemed appropriate by the our Society.
(6) A lower design temperature may be specially agreed with the Society for quenched and tempered materials.
(7) This chemical composition is not suitable for castings.
(8) Impact tests may be omitted, subject to agreement with the Society.

Table 7.5.8 PLATES AND SECTIONS FOR HULL STRUCTURES REQUIRED BY 419. 1 (2) AND 419. 1 (3) *(2022)*

Minimum design temperature of hull structure (°C)	Maximum thickness (mm) for steel grades							
	A	B	D	E	AH	DH	EH	FH
0 and above(1) −5 and above(2)	standards deemed appropriate by the our Society							
down to −5	15	25	30	50	25	45	50	50
down to −10	×	20	25	50	20	40	50	50
down to −20	×	×	20	50	×	30	50	50
down to −30	×	×	×	40	×	20	40	50
Below −30	In accordance with **Table 7.5.5a** and **7.5.5b** except that the thickness limitation given in **Table 7.5.5a** and **7.5.5b** and in note (2) of that table does not apply.							

Notes:
"x" means steel grade not to be used.
(1) For the purpose of **419. 1** (3)
(2) For the purpose of **419. 1** (2)

605. Welding of metallic materials and non-destructive testing (IGC Code 6.5) 【See Guidance】

1. General

This Article shall apply to primary and secondary barriers only, including the inner hull where this forms the secondary barrier. Acceptance testing is specified for carbon, carbon-manganese, nickel alloy and stainless steels, but these tests may be adapted for other materials. At the discretion of the Society, impact testing of stainless steel and aluminium alloy weldments may be omitted and other tests may be specially required for any material.

2. Welding consumables

Welding consumables intended for welding of cargo tanks should be in accordance with **Pt 2** of the Rules. Deposited weld metal tests and butt weld tests shall be required for all welding consumables. The results obtained from tensile and Charpy V-notch impact tests shall be in accordance with **Pt 2** of the Rules. The chemical composition of the deposited weld metal shall be recorded for information.

3. Welding procedure tests for cargo tanks and process pressure vessels

(1) Welding procedure tests for cargo tanks and process pressure vessels are required for all butt welds.
(2) The test assemblies should be representative of:
  (A) each base material
  (B) each type of consumable and welding process
  (C) each welding position.
(3) For butt welds in plates, the test assemblies shall be so prepared that the rolling direction is parallel to the direction of welding. The range of thickness qualified by each welding procedure test shall be in accordance with Recognized Standards. Radiographic or ultrasonic testing may be performed at the option of the fabricator.
(4) The following welding procedure tests for cargo tanks and process pressure vessels shall be carried out in accordance with **603.**, with specimens made from each test assembly:
  (A) cross-weld tensile tests.
  (B) longitudinal all-weld testing, where required by the recognized standards.
  (C) transverse bend tests, which may be face, root or side bends. However, longitudinal bend test may be required in lieu of transverse bend tests in cases where the base material and weld metal have different strength levels.
  (D) one set of three Charpy V-notch impacts, generally at each of the following locations, as shown in **Fig 7.5.18**:

(a) centreline of the weld
(b) fusion line (F.L.)
(c) 1 mm from the F.L.
(d) 3 mm from the F.L.
(e) 5 mm from the F.L

(E) macrosection, microsection and hardness survey may also be required.

(5) Each test shall satisfy the following requirements:

(A) tensile tests: cross-weld tensile strength shall not be less than the specified minimum tensile strength for the appropriate parent materials. For materials such as aluminium alloys, reference shall be made to **418. 1** (3) with regard to the requirements for weld metal strength of under-matched welds (where the weld metal has a lower tensile strength than the parent metal). In every case, the position of fracture shall be recorded for information.

(B) bend tests: no fracture is acceptable after a 180° bend over a former of a diameter 4 times the thickness of the test pieces.

(C) Charpy V-notch impact tests: Charpy V-notch tests shall be conducted at the temperature prescribed for the base material being joined. The results of weld metal impact tests, minimum average energy (KV), shall be no less than 27 J. The weld metal requirements for subsize specimens and single energy values shall be in accordance with **603. 2**. The results of fusion line and heat-affected zone impact tests shall show a minimum average energy (KV) in accordance with the transverse or longitudinal requirements of the base material, whichever is applicable, and for subsize specimens, the minimum average energy (KV) shall be in accordance with **603. 2**. If the material thickness does not permit machining either full-size or standard subsize specimens, the testing procedure and acceptance standards shall be in accordance with recognized standards.

(6) Procedure tests for fillet welding shall be in accordance with **Pt 2, Ch 2** of the Rules. In such cases, consumables shall be so selected that exhibit satisfactory impact properties.

4. Welding procedure tests for piping

Welding procedure tests for piping shall be carried out and shall be similar to those detailed for cargo tanks in **3**.

5. Production weld tests

(1) For all cargo tanks and process pressure vessels, except integral and membrane tanks, production weld tests shall generally be performed for approximately each 50 m of butt-weld joints and shall be representative of each welding position. For secondary barriers, the same type production tests as required for primary tanks shall be performed, except that the number of tests may be reduced subject to agreement with the Society. Tests, other than those specified in (2) to (5) may be required for cargo tanks or secondary barriers.

(2) The production tests for type A and type B independent tanks and semi-membrane tanks shall include bend tests and, where required for procedure tests, one set of three Charpy V-notch tests. The tests shall be made for each 50 m of weld. The Charpy V-notch tests shall be made with specimens having the notch alternately located in the centre of the weld and in the heat-affected zone (most critical location based on procedure qualification results). For austenitic stainless steel, all notches shall be in the centre of the weld.

(3) For type C independent tanks and process pressure vessels, transverse weld tensile tests are required in addition to the tests listed in (2). Tensile tests shall meet the requirements of **3** (5).

(4) The quality assurance/quality control programme shall ensure the continued conformity of the production welds as defined in the material manufacturers quality manual.

(5) The test requirements for integral and membrane tanks are the same as the applicable test requirements listed in **3**.

6. Non-destructive testing

(1) All test procedures and acceptance standards shall be in accordance with recognized standards, unless the designer specifies a higher standard in order to meet design assumptions. Radiographic testing shall be used, in principle, to detect internal defects. However, an approved ultrasonic test procedure in lieu of radiographic testing may be conducted, but, in addition, supplementary radiographic testing at selected locations shall be carried out to verify the results. Radiographic and ultrasonic testing records shall be retained.

(2) For type A independent tanks and semi-membrane tanks, where the design temperature is below -20 °C, and for type B independent tanks, regardless of temperature, all full penetration butt

welds of the shell plating of cargo tanks shall be subjected to non-destructive testing suitable to detect internal defects over their full length. Ultrasonic testing in lieu of radiographic testing may be carried out under the same conditions as described in (1).

(3) Where the design temperature is higher than -20°C, all full penetration butt welds in way of intersections and at least 10% of the remaining full penetration welds of tank structures shall be subjected to radiographic testing or ultrasonic testing under the same conditions as described in (1).

(4) In each case, the remaining tank structure, including the welding of stiffeners and other fittings and attachments, shall be examined by magnetic particle or dye penetrant methods, as considered necessary.

(5) For type C independent tanks, the extent of non-destructive testing shall be total or partial according to recognized standards, but the controls to be carried out shall not be less than the following:

(A) Total non-destructive testing referred to in **423. 2** (1) (C):

(a) Radiographic testing:

(i) all butt welds over their full length;

(b) Non-destructive testing for surface crack detection:

(i) all welds over 10 % of their length;

(ii) reinforcement rings around holes, nozzles, etc., over their full length.

As an alternative, ultrasonic testing as described in (1) may be accepted as a partial substitute for the radiographic testing. In addition, the Society may require total ultrasonic testing on welding of reinforcement rings around holes, nozzles, etc.

(B) Partial non-destructive testing referred to in **423. 2** (1) (C):

(a) Radiographic testing:

(i) all butt-welded crossing joints and at least 10% of the full length of butt welds at selected positions uniformly distributed;

(b) Non-destructive testing for surface crack detection:

(i) reinforcement rings around holes, nozzles, etc., over their full length;

(c) Ultrasonic testing:

(i) as may be required by the Society in each instance.

(6) The quality assurance/quality control programme shall ensure the continued conformity of the nondestructive testing of welds, as defined in the material manufacturer's quality manual.

(7) Inspection of piping should be carried out in accordance with the requirements of **Sec 5**.

(8) The secondary barrier shall be non-destructive tested for internal defects as considered necessary. Where the outer shell of the hull is part of the secondary barrier, all sheer strake butts and the intersections of all butts and seams in the side shell shall be tested by radiographic testing.

606. Other requirements for construction in metallic materials (IGC Code 6.6) 【See Guidance】

1. General

Inspection and non-destructive testing of welds shall be in accordance with the requirements of **605. 5** and **605. 6**. Where higher standards or tolerances are assumed in the design, they shall also be satisfied.

2. Independent tank

(1) For type C tanks and type B tanks primarily constructed of bodies of revolution, the tolerances relating to manufacture, such as out-of-roundness, local deviations from the true form, welded joints alignment and tapering of plates having different thicknesses, shall comply with recognized standards. The tolerances shall also be related to the buckling analysis referred to in **422. 3** (2) and **423. 3** (2).

(2) For type C tanks of carbon and carbon-manganese steel, post-weld heat treatment shall be performed after welding, if the design temperature is below -10 °C. Post-weld heat treatment in all other cases and for materials other than those mentioned above shall be to recognized standards. The soaking temperature and holding time shall be to the recognized standards.

(3) In the case of type C tanks and large cargo pressure vessels of carbon or carbon-manganese steel, for which it is difficult to perform the heat treatment, mechanical stress relieving by pressurizing may be carried out as an alternative to the heat treatment and subject to the following conditions:

(A) complicated welded pressure vessel parts such as sumps or domes with nozzles, with ad-

jacent shell plates shall be heat treated before they are welded to larger parts of the pressure vessel.

(B) the mechanical stress relieving process shall preferably be carried out during the hydrostatic pressure test required by **423. 6**, by applying a higher pressure than the test pressure required by **423. 6** (1). The pressurizing medium shall be water;

(C) for the water temperature, **423. 6** (2) applies.

(D) stress relieving shall be performed while the tank is supported by its regular saddles or supporting structure or, when stress relieving cannot be carried out on board, in a manner which will give the same stresses and stress distribution as when supported by its regular saddles or supporting structure.

(E) the maximum stress relieving pressure shall be held for 2 hours per 25 mm of thickness, but in no case less than 2 hours.

(F) the upper limits placed on the calculated stress levels during stress relieving shall be the following:

(a) equivalent general primary membrane stress: 0.9 R_e

(b) equivalent stress composed of primary bending stress plus membrane stress: 1.35 R_e, where R_e is the specific lower minimum yield stress or 0.2 % proof stress at test temperature of the steel used for the tank.

(G) strain measurements will normally be required to prove these limits for at least the first tank of a series of identical tanks built consecutively. The location of strain gauges shall be included in the mechanical stress relieving procedure to be submitted in accordance with (3).

(H) the test procedure shall demonstrate that a linear relationship between pressure and strain is achieved at the end of the stress relieving process when the pressure is raised again up to the design pressure.

(I) high-stress areas in way of geometrical discontinuities such as nozzles and other openings shall be checked for cracks by dye penetrant or magnetic particle inspection after mechanical stress relieving. Particular attention in this respect shall be paid to plates exceeding 30 mm in thickness.

(J) steels which have a ratio of yield stress to ultimate tensile strength greater than 0.8 shall generally not be mechanically stress relieved. If, however, the yield stress is raised by a method giving high ductility of the steel, slightly higher rates may be accepted upon consideration in each case.

(K) Mechanical stress relieving cannot be substituted for heat treatment of cold formed parts of tanks if the degree of cold forming exceeds the limit above which heat treatment is required.

(L) the thickness of the shell and heads of the tank shall not exceed 40 mm. Higher thicknesses may be accepted for parts which are thermally stress relieved.

(M) local buckling shall be guarded against, particularly when tori-spherical heads are used for tanks and domes.

(N) the procedure for mechanical stress relieving shall be to a recognized standard.

3. Secondary barriers

During construction, the requirements for testing and inspection of secondary barriers shall be approved or accepted by the Society (see **406. 2** (5) and **406. 2** (6)).

4. Semi-membrane tanks

For semi-membrane tanks, the relevant requirements in **606.** for independent tanks or for membrane tanks shall be applied as appropriate.

5. Membrane tanks

The quality assurance/quality control programme shall ensure the continued conformity of the weld procedure qualification, design details, materials, construction, inspection and production testing of components. These standards and procedures shall be developed during the prototype testing programme.

607. Non-metallic materials (IGC Code 6.7)

1. General

Guidance in the selection and use of these materials is given in **Annex 「 7A-6 Non-Metallic Materials 」.**

Section 7 Cargo Pressure/Temperature Control

701. General (IGC Code 7.1) 【See Guidance】

1. With the exception of tanks designed to withstand full gauge vapour pressure of the cargo under conditions of the upper ambient design temperatures, cargo tank's pressure and temperature are to be maintained at all times within their design range by either one, or a combination of, the following methods:
   (1) reliquefaction of cargo vapours
   (2) thermal oxidation of vapours
   (3) pressure accumulation
   (4) liquid cargo cooling
2. For certain cargoes, where required by **Sec 17**, the cargo containment system is to be capable of withstanding the full vapour pressure of the cargo under conditions of the upper ambient design temperatures, irrespective of any system provided for dealing with boil-off gas.
3. Venting of the cargo to maintain cargo tank pressure and temperature is not to be acceptable except in emergency situations. The Society may permit certain cargoes to be controlled by venting cargo vapours to the atmosphere at sea. This may also be permitted in port with the authorization of the port Administration.

702. Design of systems (IGC Code 7.2)

For normal service, the upper ambient design temperature is to be:
- sea: 32°C
- air: 45°C

For service in particularly hot or cold zones, these design temperatures are to be increased or decreased, to the satisfaction of the Society. The overall capacity of the system is to be such that it can control the pressure within the design conditions without venting to atmosphere.

703. Reliquefaction of cargo vapours (IGC Code 7.3) 【See Guidance】

1. General

(1) The reliquefaction system may be arranged in one of the following ways:
   (A) a direct system, where evaporated cargo is compressed, condensed and returned to the cargo tanks;
   (B) an indirect system, where cargo or evaporated cargo is cooled or condensed by refrigerant without being compressed;
   (C) a combined system, where evaporated cargo is compressed and condensed in a cargo/refrigerant heat exchanger and returned to the cargo tanks; and
   (D) if the reliquefaction system produces a waste stream containing methane during pressure control operations within the design conditions, these waste gases, as far as reasonably practicable, are disposed of without venting to atmosphere.

(2) The requirements of **Sec 17** and **19** may preclude the use of one or more of these systems or may specify the use of a particular system.

2. Compatibility

Refrigerants used for reliquefaction are to be compatible with the cargo they may come into contact with. In addition, when several refrigerants are used and may come into contact, they are to be compatible with each other.

704. Thermal oxidation of vapours (IGC Code 7.4)

1. General

Maintaining the cargo tank pressure and temperature by means of thermal oxidation of cargo vapours, as defined in **105. 50** and **1602.** is to be permitted only for LNG cargoes. In general:

(1) thermal oxidation systems are to exhibit no externally visible flame and are to maintain the uptake exhaust temperature below 535 °C.

(2) arrangement of spaces where oxidation systems are located is to comply with **1603.** and supply systems are to comply with **1604**.
(3) if waste gases coming from any other system are to be burnt, the oxidation system is to be designed to accommodate all anticipated feed gas compositions.

2. Thermal oxidation systems

Thermal oxidation systems are to comply with the following:
(1) each thermal oxidation system is to have a separate uptake.
(2) each thermal oxidation system is to have a dedicated forced draught system.
(3) combustion chambers and uptakes of thermal oxidation systems are to be designed to prevent any accumulation of gas.

3. Burners

Burners are to be designed to maintain stable combustion under all design firing conditions.

4. Safety

(1) Suitable devices are to be installed and arranged to ensure that gas flow to the burner is cut off unless satisfactory ignition has been established and maintained.
(2) Each oxidation system is to have provision to manually isolate its gas fuel supply from a safely accessible position.
(3) Provision is to be made for automatic purging the gas supply piping to the burners by means of an inert gas, after the extinguishing of these burners.
(4) In case of flame failure of all operating burners for gas or oil or for a combination thereof, the combustion chambers of the oxidation system are to be automatically purged before relighting.
(5) Arrangements are to be made to enable the combustion chamber to be manually purged.

705. Pressure accumulation systems (IGC Code 7.5)

The containment system insulation, design pressure or both are to be adequate to provide for a suitable margin for the operating time and temperatures involved. No additional pressure and temperature control system is required. Conditions for acceptance are to be recorded in the International Certificate of Fitness for the Carriage of Liquefied Gases in Bulk.

706. Liquid cargo cooling (IGC Code 7.6)

The bulk cargo liquid may be refrigerated by coolant circulated through coils fitted either inside the cargo tank or onto the external surface of the cargo tank.

707. Segregation (IGC Code 7.7) 【See Guidance】

Where two or more cargoes that may react chemically in a dangerous manner are carried simultaneously, separate systems as defined in **105. 45**, each complying with availability criteria as specified in **708.**, are to be provided for each cargo. For simultaneous carriage of two or more cargoes that are not reactive to each other but where, due to properties of their vapour, separate systems are necessary, separation may be by means of isolation valves.

708. Availability (IGC Code 7.8) 【See Guidance】

The availability of the system and its supporting auxiliary services are to be such that:

1. in case of a single failure of a mechanical non-static component or a component of the control systems, the cargo tanks' pressure and temperature can be maintained within their design range without affecting other essential services.

2. redundant piping systems are not required.

3. heat exchangers that are solely necessary for maintaining the pressure and temperature of the cargo tanks within their design ranges are to have a standby heat exchanger, unless they have a capacity in excess of 25% of the largest required capacity for pressure control and they can be repaired on board without external resources. Where an additional and separate method of cargo tank pressure and temperature control is fitted that is not reliant on the sole heat exchanger, then a standby heat exchanger is not required.

4. for any cargo heating or cooling medium, provisions are to be made to detect the leakage of toxic

or flammable vapours into an otherwise non-hazardous area or overboard in accordance with **1306**. Any vent outlet from this leak detection arrangement is to be to a safe location and be fitted with a flame screen.

Section 8 Vent Systems for Cargo Containment

801. General (IGC Code 8.1) 【See Guidance】

All cargo tanks are to be provided with a pressure relief system appropriate to the design of the cargo containment system and the cargo being carried. Hold spaces and interbarrier spaces, which may be subject to pressures beyond their design capabilities, are also to be provided with a suitable pressure relief system. Pressure control systems specified in **Sec 7** are to be independent of the pressure relief systems.

802. Pressure relief systems (IGC Code 8.2) 【See Guidance】

1. Cargo tanks, including deck tanks, are to be fitted with a minimum of two pressure relief valves (PRVs), each being of equal size within manufacturer's tolerances and suitably designed and constructed for the prescribed service.

2. Interbarrier spaces are to be provided with pressure relief devices. For membrane systems, the designer is to demonstrate adequate sizing of interbarrier space PRVs.

3. The setting of the PRVs is not to be higher than the vapour pressure that has been used in the design of the tank. Where two or more PRVs are fitted, valves comprising not more than 50 % of the total relieving capacity may be set at a pressure up to 5 % above MARVS to allow sequential lifting, minimizing unnecessary release of vapour.

4. The following temperature requirements apply to PRVs fitted to pressure relief systems:

(1) PRVs on cargo tanks with a design temperature below 0 °C are to be designed and arranged to prevent their becoming inoperative due to ice formation.

(2) the effects of ice formation due to ambient temperatures are to be considered in the construction and arrangement of PRVs.

(3) PRVs are to be constructed of materials with a melting point above 925 °C. Lower melting point materials for internal parts and seals may be accepted, provided that fail-safe operation of the PRV is not compromised.

(4) sensing and exhaust lines on pilot operated relief valves are to be of suitably robust construction to prevent damage.

5. Valve testing

(1) PRVs are to be type approved in accordance with the procedure as deemed appropriate by the Society.

(2) Each PRV is to be tested to ensure that:

(A) it opens at the prescribed pressure setting, with an allowance not exceeding ± 10 % for 0 to 0.15 MPa, ± 6 % for 0.15 to 0.3 MPa, ± 3 % for 0.3 MPa and above.

(B) seat tightness is acceptable.

(C) pressure containing parts will withstand at least 1.5 times the design pressure.

6. PRVs are to be set and sealed by the Society, and a record of this action, including the valves' set pressure, are to be retained on board the ship.

7. Cargo tanks may be permitted to have more than one relief valve set pressure in the following cases:

(1) installing two or more properly set and sealed PRVs and providing means, as necessary, for isolating the valves not in use from the cargo tank; or

(2) installing relief valves whose settings may be changed by the use of a previously approved device not requiring pressure testing to verify the new set pressure. All other valve adjustments are to be sealed.

8. Changing the set pressure under the provisions of **802. 7** and the corresponding resetting of the alarms referred to in **1304. 2** is to be carried out under the supervision of the master in accordance with approved procedures and as specified in the ship's operating manual. Changes in set pressure are to be recorded in the ship's log and a sign is to be posted in the cargo control room, if provided, and at each relief valve, stating the set pressure.

9. In the event of a failure of a cargo tank-installed PRV, a safe means of emergency isolation is to be available:

(1) Procedures are to be provided and included in the cargo operations manual (see **1802.**).
(2) The procedures are to allow only one of the cargo tank installed PRVs to be isolated.
(3) Isolation of the PRV is to be carried out under the supervision of the master. This action is to be recorded in the ship's log and a sign posted in the cargo control room, if provided, and at the PRV.
(4) The tank is not to be loaded until the full relieving capacity is restored.

10. Each PRV installed on a cargo tank is to be connected to a venting system, which is to be:

(1) so constructed that the discharge will be unimpeded and directed vertically upwards at the exit
(2) arranged to minimize the possibility of water or snow entering the vent system
(3) arranged such that the height of vent exits is not to be less than B/3 or 6 m, whichever is the greater, above the weather deck and
(4) 6 m above working areas and walkways.

11. Cargo PRV vent exits are to be arranged at a distance at least equal to B or 25 m, whichever is less, from the nearest air intake, outlet or opening to accommodation spaces, service spaces and control stations, or other non-hazardous areas. For ships less than 90 m in length, smaller distances may be permitted. All other vent outlets connected to the cargo containment system are to be arranged at a distance of at least 10 m from the nearest air intake, outlet or opening to accommodation spaces, service spaces and control stations, or other non-hazardous areas.

12. All other cargo vent outlets not dealt with in other sections are to be arranged in accordance with **Pars 10** and **11**. Means are to be provided to prevent liquid overflow from vent mast outlets, due to hydrostatic pressure from spaces to which they are connected.

13. If cargoes that react in a dangerous manner with each other are carried simultaneously, a separate pressure relief system is to be fitted for each one.

14. In the vent piping system, means for draining liquid from places where it may accumulate is to be provided. The PRVs and piping are to be arranged so that liquid can, under no circumstances, accumulate in or near the PRVs.

15. Suitable protection screens of not more than 13 mm square mesh are to be fitted on vent outlets to prevent the ingress of extraneous objects without adversely affecting the flow. Other requirements for protection screens apply when carrying specific cargoes. (see **1709** and **1721**)

16. All vent piping are to be designed and arranged not to be damaged by the temperature variations to which it may be exposed, forces due to flow or the ship's motions.

17. PRVs are to be connected to the highest part of the cargo tank above deck level. PRVs are to be positioned on the cargo tank so that they will remain in the vapour phase at the filling limit (FL) as defined in **Sec 15**, under conditions of 15° list and 0.015 L trim, where L is defined in **105. 29**.

18. The adequacy of the vent system fitted on tanks loaded in accordance with **1505. 2** is to be demonstrated taking into account the requirements of **IMO Res. A. 829(19)**. A relevant certificate is to be permanently kept on board the ship. For the purposes of this paragraph, vent system means:

(1) the tank outlet and the piping to the PRV
(2) the PRV
(3) the piping from the PRVs to the location of discharge to the atmosphere, including any interconnections and piping that joins other tanks.

803. Vacuum protection systems (IGC Code 8.3)

1. Cargo tanks not designed to withstand a maximum external pressure differential 0.025 MPa, or tanks that cannot withstand the maximum external pressure differential that can be attained at maximum discharge rates with no vapour return into the cargo tanks, or by operation of a cargo refrigeration system, or by thermal oxidation, are to be fitted with: **【See Guidance】**

(1) two independent pressure switches to sequentially alarm and subsequently stop all suction of cargo liquid or vapour from the cargo tank and refrigeration equipment, if fitted, by suitable means at a pressure sufficiently below the maximum external designed pressure differential of the cargo tank
(2) vacuum relief valves with a gas flow capacity at least equal to the maximum cargo discharge rate per cargo tank, set to open at a pressure sufficiently below the external design differential

pressure of the cargo tank.

2. Subject to the requirements of **Sec 17**, the vacuum relief valves are to admit an inert gas, cargo vapour or air to the cargo tank and are to be arranged to minimize the possibility of the entrance of water or snow. If cargo vapour is admitted, it is to be from a source other than the cargo vapour lines. **【See Guidance】**

3. The vacuum protection system is to be capable of being tested to ensure that it operates at the prescribed pressure.

804. Sizing of pressure relieving system (IGC Code 8.4)

1. Sizing of pressure relief valves 【See Guidance】

PRVs are to have a combined relieving capacity for each cargo tank to discharge the greater of the following, with not more than a 20 % rise in cargo tank pressure above the MARVS:

(1) the maximum capacity of the cargo tank inerting system, if the maximum attainable working pressure of the cargo tank inerting system exceeds the MARVS of the cargo tanks; or

(2) vapours generated under fire exposure computed using the following formula:

$$Q = FGA^{0.82} \quad (\mathrm{m^3/s})$$

where:

Q : minimum required rate of discharge of air at standard conditions of $273K$ and $0.1013\,\mathrm{MPa}$.

F : fire exposure factor for different cargo tank types as follows:

F : 1.0 for tanks without insulation located on deck

F : 0.5 for tanks above the deck, when insulation is approved by the Society. Approval will be based on the use of an approved fireproofing material, the thermal conductance of insulation, and its stability under fire exposure

F : 0.5 for uninsulated independent tanks installed in holds

F : 0.2 for insulated independent tanks in holds (or uninsulated independent tanks in insulated holds)

F : 0.1 for insulated independent tanks in inerted holds (or uninsulated independent tanks in inerted, insulated holds)

F : 0.1 for membrane and semi-membrane tanks.

For independent tanks partly protruding through the weather deck, the fire exposure factor is to be determined on the basis of the surface areas above and below deck.

G : gas factor according to formula:

$$G = \frac{12.4}{LD}\sqrt{\frac{ZT}{M}}$$

with:

T : temperature in degrees kelvins (K) at relieving conditions, i.e. 120 % of the pressure at which the pressure relief valve is set.

L : latent heat of the material being vaporized at relieving conditions, in $\mathrm{kJ/kg}$.

D : a constant based on relation of specific heats k and is calculated as follows:

$$D = \sqrt{k\left(\frac{2}{k+1}\right)^{\frac{k+1}{k-1}}}$$

where:

k : ratio of specific heats at relieving conditions, and the value of which is between 1

and 2.2. If k is not known, D = 0.606 is to be used

Z : compressibility factor of the gas at relieving conditions. If not known, Z = 1.0 is to be used and

M : molecular mass of the product.

The gas factor of each cargo to be carried is to be determined and the highest value is to be used for PRV sizing.

A : external surface area of the tank (m^2), as defined in **105. 13**, for different tank types, as shown in **Fig 7.5.19**.

(3) The required mass flow of air at relieving conditions is given by the formula:

$$M_{air} = Q\rho_{AIR} \quad (kg/s)$$

where:

density of air (ρ_{air}) : 1.293 kg/m^3 *(air at 273.15 K, 0.1013 MPa)*

2. Sizing of vent pipe system

Pressure losses upstream and downstream of the PRVs is to be taken into account when determining their size to ensure the flow capacity required by **804. 1**.

3. Upstream pressure losses

(1) The pressure drop in the vent line from the tank to the PRV inlet is not to exceed 3 % of the valve set pressure at the calculated flow rate, in accordance with **804. 1**.

(2) Pilot-operated PRVs are to be unaffected by inlet pipe pressure losses when the pilot senses directly from the tank dome.

(3) Pressure losses in remotely sensed pilot lines are to be considered for flowing type pilots.

4. Downstream pressure losses

(1) Where common vent headers and vent masts are fitted, calculations are to include flow from all attached PRVs.

(2) The built-up back pressure in the vent piping from the PRV outlet to the location of discharge to the atmosphere, and including any vent pipe interconnections that join other tanks, is not to exceed the following values:
(A) for unbalanced PRVs: 10 % of MARVS
(B) for balanced PRVs: 30 % of MARVS and
(C) for pilot operated PRVs: 50 % of MARVS.
Alternative values provided by the PRV manufacturer may be accepted.

5. To ensure stable PRV operation, the blow-down is not to be less than the sum of the inlet pressure loss and 0.02 MARVS at the rated capacity.

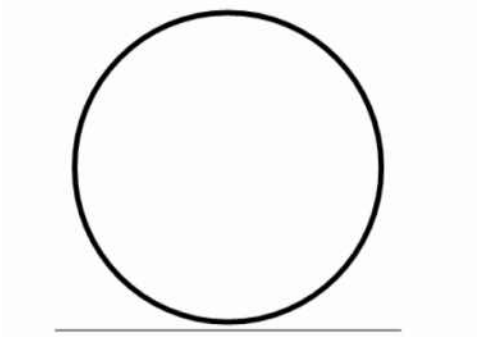

Cylindrical tanks with spherically dished, hemispherical or semi-ellipsoidal heads or spherical tanks

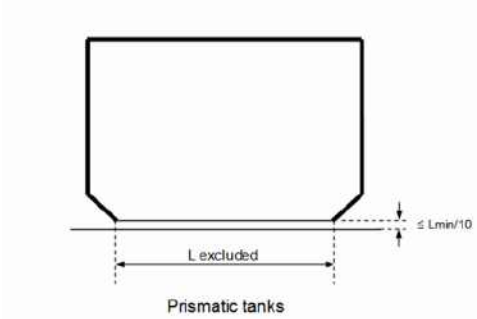

Prismatic tanks

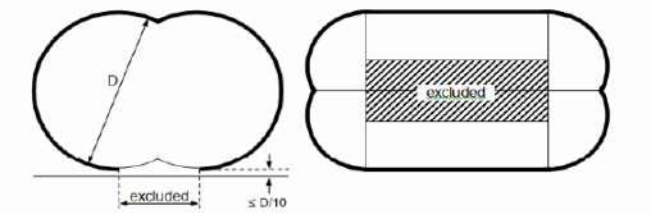

Bilobe tanks

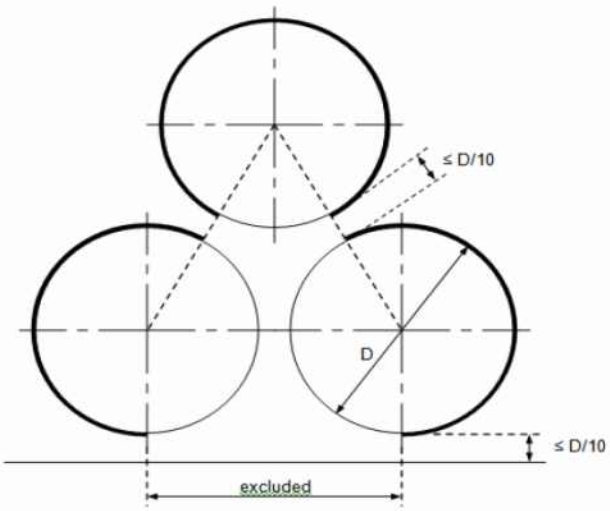

Horizontal cylindrical tanks arrangement

Fig 7.5.19

Section 9 Cargo Containment System Atmosphere Control

901. Atmosphere control within the cargo containment system (IGC Code 9.1) 【See Guidance】

1. A piping system is to be arranged to enable each cargo tank to be safely gas-freed, and to be safely filled with cargo vapour from a gas-free condition. The system is to be arranged to minimize the possibility of pockets of gas or air remaining after changing the atmosphere.

2. For flammable cargoes, the system is to be designed to eliminate the possibility of a flammable mixture existing in the cargo tank during any part of the atmosphere change operation by utilizing an inerting medium as an intermediate step.

3. Piping systems that may contain flammable cargoes are to comply with **Par 1** and **2**.

4. A sufficient number of gas sampling points is to be provided for each cargo tank and cargo piping system to adequately monitor the progress of atmosphere change. Gas sampling connections are to be fitted with a single valve above the main deck, sealed with a suitable cap or blank (see **506. 5** (5)).

5. Inert gas utilized in these procedures may be provided from the shore or from the ship.

902. Atmosphere control within the hold spaces (cargo containment systems other than type C independent tanks) (IGC Code 9.2) 【See Guidance】

1. Interbarrier and hold spaces associated with cargo containment systems for flammable gases requiring full or partial secondary barriers are to be inerted with a suitable dry inert gas and kept inerted with make-up gas provided by a shipboard inert gas generation system, or by shipboard storage, which is to be sufficient for normal consumption for at least 30 days.

2. Alternatively, subject to the restrictions specified in **Sec 17**, the spaces referred to in **1** requiring only a partial secondary barrier may be filled with dry air provided that the ship maintains a stored charge of inert gas or is fitted with an inert gas generation system sufficient to inert the largest of these spaces, and provided that the configuration of the spaces and the relevant vapour detection systems, together with the capability of the inerting arrangements, ensures that any leakage from the cargo tanks will be rapidly detected and inerting effected before a dangerous condition can develop. Equipment for the provision of sufficient dry air of suitable quality to satisfy the expected demand is to be provided.

3. For non-flammable gases, the spaces referred to in **Par 1** and **Par 2** may be maintained with a suitable dry air or inert atmosphere.

903. Environmental control of spaces surrounding type C independent tanks (IGC Code 9.3) 【See Guidance】

Spaces surrounding cargo tanks that do not have secondary barriers are to be filled with suitable dry inert gas or dry air and be maintained in this condition with make-up inert gas provided by a shipboard inert gas generation system, shipboard storage of inert gas, or with dry air provided by suitable air drying equipment. If the cargo is carried at ambient temperature, the requirement for dry air or inert gas is not applicable .

904. Inerting (IGC Code 9.4) 【See Guidance】

1. Inerting refers to the process of providing a non-combustible environment. Inert gases are to be compatible chemically and operationally at all temperatures likely to occur within the spaces and the cargo. The dew points of the gases are to be taken into consideration.

2. Where inert gas is also stored for fire-fighting purposes, it is to be carried in separate containers and is not to be used for cargo services.

3. Where inert gas is stored at temperature below 0 °C, either as a liquid or as a vapour, the storage and supply system are to be designed so that the temperature of the ship's structure is not reduced below the limiting values imposed on it.

4. Arrangements to prevent the backflow of cargo vapour into the inert gas system that are suitable for the cargo carried, are to be provided. If such plants are located in machinery spaces or other spaces outside the cargo area, two non-return valves or equivalent devices and, in addition, a removable spool piece is to be fitted in the inert gas main in the cargo area. When not in use, the inert gas system is to be made separate from the cargo system in the cargo area except for connections to the hold spaces or interbarrier spaces.

5. The arrangements are to be such that each space being inerted can be isolated and the necessary controls and relief valves etc., are to be provided for controlling pressure in these spaces.

6. Where insulation spaces are continually supplied with an inert gas as part of a leak detection system, means are to be provided to monitor the quantity of gas being supplied to individual spaces.

905. Inert gas production on board (IGC Code 9.5)

1. The equipment is to be capable of producing inert gas with an oxygen content at no time greater than 5 % by volume, subject to the special requirements of **Sec 17**. A continuous-reading oxygen content meter is to be fitted to the inert gas supply from the equipment and is to be fitted with an alarm set at a maximum of 5 % oxygen content by volume, subject to the requirements of **Sec 17**. **【See Guidance】**

2. An inert gas system is to have pressure controls and monitoring arrangements appropriate to the cargo containment system.

3. Spaces containing inert gas generation plants are to have no direct access to accommodation spaces, service spaces or control stations, but may be located in machinery spaces. Inert gas piping is not to pass through accommodation spaces, service spaces or control stations.

4. Combustion equipment for generating inert gas is not to be located within the cargo area. Special consideration may be given to the location of inert gas generating equipment using a catalytic combustion process.

Section 10 Electrical Installations

1001. Definitions (IGC Code 10.1)

For the purpose of this section, unless expressly provided otherwise, the definitions below are to apply.

1. **Hazardous area** is an area in which an explosive gas atmosphere is or may be expected to be present, in quantities such as to require special precautions for the construction, installation and use of electrical apparatus.(eg. IEC 60092-502:1999)
   (1) Zone 0 hazardous area is an area in which an explosive gas atmosphere is present continuously or is present for long periods.
   (2) Zone 1 hazardous area is an area in which an explosive gas atmosphere is likely to occur in normal operation.
   (3) Zone 2 hazardous area is an area in which an explosive gas atmosphere is not likely to occur in normal operation and, if it does occur, is likely to do so infrequently and for a short period only.
2. **Non-hazardous area** is an area in which an explosive gas atmosphere is not expected to be present in quantities such as to require special precautions for the construction, installation and use of electrical apparatus.

1002. General requirements (IGC Code 10.2)

1. Electrical installations are to be such as to minimize the risk of fire and explosion from flammable products.
2. Electrical installations are to be in accordance with IEC 60092-502:1999.
3. Electrical equipment or wiring is not to be installed in hazardous areas, unless essential for operational purposes or safety enhancement.
4. Where electrical equipment is installed in hazardous areas as provided in **Par 3**, it is to be selected, installed and maintained in accordance with recognized standards by the Society or equivalent thereto. Equipment for hazardous areas is to be type approved by the Society. Automatic isolation of non-certified equipment on detection of a flammable gas is not to be accepted as an alternative to the use of certified equipment. **【See Guidance】**
5. To facilitate the selection of appropriate electrical apparatus and the design of suitable electrical installations, hazardous areas are divided into zones in accordance with recognized standards.
6. Electrical generation and distribution systems, and associated control systems are to be designed such that a single fault will not result in the loss of ability to maintain cargo tank pressures, as required by **708. 1**, and hull structure temperature, as required by **419. 1** (6), within normal operating limits. Failure modes and effects are to be analysed and documented to a standard not inferior to those acceptable to the Society.(eg. IEC 60812)
7. The lighting system in hazardous areas is to be divided between at least two branch circuits. All switches and protective devices are to interrupt all poles or phases and are to be located in a non-hazardous area.
8. Electrical depth sounding or log devices and impressed current cathodic protection system anodes or electrodes are to be housed in gastight enclosures.
9. Submerged cargo pump motors and their supply cables may be fitted in cargo containment systems. Arrangements are to be made to automatically shut down the motors in the event of low-liquid level. This may be accomplished by sensing low pump discharge pressure, low motor current or low liquid level. This shutdown is to be alarmed at the cargo control station. Cargo pump motors are to be capable of being isolated from their electrical supply during gas-freeing operations.

Section 11 Fire Protection and Fire Extinction

1101. Fire safety requirements (IGC Code 11.1)

1. The requirements for tankers in SOLAS chapter II-2 are to apply to ships covered by this Chapter, irrespective of tonnage including ships of less than 500 tons gross tonnage, except that:

(1) regulations 4.5.1.6 and 4.5.10 do not apply

(2) regulations 10.4 and 10.5 are to apply as they would apply to tankers of 2,000 gross tonnage and over

(3) regulation 10.5.6 is to apply to ships of 2,000 gross tonnage and over

(4) the following regulations of SOLAS chapter II-2 related to tankers do not apply and are replaced by Sections and articles of this Chapter as detailed below :

Table 7.5.9

SOLAS Regulation	Replaced by
10.10	**1106.**
4.5.1.1 and 4.5.1.2	**Sec 3**
4.5.5	**Relevant section in this Chapter**
10.8	**1103.** and **1104.**
10.9	**1105.**
10.2	**1102. 1 to 1102. 4**

(5) regulation 13.3.4 and 13.4.3 should apply to ships of 500 gross tonnage and over

2. All sources of ignition should be excluded from spaces where flammable vapour may be present except as otherwise provided in **Sec. 10** and **16**. **【See Guidance】**

3. The provisions of this article apply in conjunction with **Sec 3**.

4. For the purposes of fire fighting, any weather deck areas above cofferdams, ballast or void spaces at the after end of the aftermost hold space or at the forward end of the forwardmost hold space are to be included in the cargo area.

1102. Fire mains and hydrants (IGC Code 11.2)

1. Irrespective of size, ships carrying products that are subject to this Chapter are to comply with the requirements of regulation II-2/10.2 of the SOLAS Convention, as applicable to cargo ships, except that the required fire pump capacity and fire main and water service pipe diameter are not to be limited by the provisions of regulations II-2/10.2.2.4.1 and II-2/10.2.1.3, when a fire pump is used to supply the water-spray system, as permitted by **1103. 3**. The capacity of this fire pump is to be such that these areas can be protected when simultaneously supplying two jets of water from fire hoses with 19 mm nozzles at a pressure of at least 0.5 MPa gauge. **【See Guidance】**

2. The arrangements are to be such that at least two jets of water can reach any part of the deck in the cargo area and those portions of the cargo containment system and tank covers that are above the deck. The necessary number of fire hydrants is to be located to satisfy the above arrangements and to comply with the requirements of regulations II-2/10.2.1.5.1 and II-2/10.2.3.3 of the SOLAS Convention, with hose lengths as specified in regulation II-2/10.2.3.1.1. In addition, the requirements of regulation II-2/10.2.1.6 are to be met at a pressure of at least 0.5 MPa gauge.

3. Stop valves are to be fitted in any crossover provided and in the fire main or mains in a protected location, before entering the cargo area and at intervals ensuring isolation of any damaged single section of the fire main, so that **2** can be complied with using not more than two lengths of hoses from the nearest fire hydrant. The water supply to the fire main serving the cargo area is to be a ring main supplied by the main fire pumps or a single main supplied by fire pumps positioned fore and aft of the cargo area, one of which is to be independently driven.

4. Nozzles are to be of an approved dual-purpose type (i.e. spray/jet type) incorporating a shutoff. *(2019)* **【See Guidance】**

5. After installation, the pipes, valves, fittings and assembled system are to be subject to a tightness and function test.

1103. Water spray system (IGC Code 11.3)

1. On ships carrying flammable or toxic products or both, a water spray system, for cooling, fire prevention and crew protection is to be installed to cover: 【See Guidance】

(1) exposed cargo tank domes, any exposed parts of cargo tanks and any part of cargo tank covers that may be exposed to heat from fires in adjacent equipment containing cargo such as exposed booster pumps/heaters/re-gasification or re-liquefaction plants, hereafter addressed as gas process units, positioned on weather decks.

(2) exposed on-deck storage vessels for flammable or toxic products.

(3) gas process units positioned on deck.

(4) cargo liquid and vapour discharge and loading connections, including the presentation flange and the area where their control valves are situated, which are to be at least equal to the area of the drip trays provided.

(5) all exposed emergency shut-down (ESD) valves in the cargo liquid and vapour pipes, including the master valve for supply to gas consumers.

(6) exposed boundaries facing the cargo area, such as bulkheads of superstructures and deckhouses normally manned, cargo machinery spaces, store-rooms containing high fire-risk items and cargo control rooms. Exposed horizontal boundaries of these areas do not require protection unless detachable cargo piping connections are arranged above or below. Boundaries of unmanned forecastle structures not containing high fire-risk items or equipment do not require water-spray protection.

(7) exposed lifeboats, liferafts and muster stations facing the cargo area, regardless of distance to cargo area.

(8) any semi-enclosed cargo machinery spaces and semi-enclosed cargo motor room.

Ships intended for operation as listed in **101. 6** are to be subject to special consideration (see **1103. 3** (2)).

2. (1) The system is to be capable of covering all areas mentioned in **1**, with a uniformly distributed water application rate of at least 10 $\mathrm{L/m^2/min}$ for the largest projected horizontal surfaces and 4 $\mathrm{L/m^2/min}$ for vertical surfaces. For structures having no clearly defined horizontal or vertical surface, the capacity of the water-spray system is not to be less than the projected horizontal surface multiplied by 10 $\mathrm{L/m^2/min}$.

(2) On vertical surfaces, spacing of nozzles protecting lower areas may take account of anticipated rundown from higher areas. Stop valves are to be fitted in the main supply line(s) in the water-spray system, at intervals not exceeding 40 m, for the purpose of isolating damaged sections. Alternatively, the system may be divided into two or more sections that may be operated independently, provided the necessary controls are located together in a readily accessible position outside the cargo area. A section protecting any area included in **1** (1) and (2) is to cover at least the entire athwartship tank grouping in that area. Any gas process unit(s) included in **1** (3) may be served by an independent section. 【See Guidance】

3. The capacity of the water-spray pumps is to be capable of simultaneous protection of the greater of the following:

(1) any two complete athwartship tank groupings, including any gas process units within these areas; or

(2) for ships intended for operation as listed in **101. 6**, necessary protection subject to special consideration under **1** of any added fire hazard and the adjacent athwartship tank grouping.

in addition to surfaces specified in **1** (4) to (8). Alternatively, the main fire pumps may be used for this service, provided that their total capacity is increased by the amount needed for the water-spray system. In either case, a connection, through a stop valve, is to be made between the fire main and water-spray system main supply line outside the cargo area.

4. The boundaries of superstructures and deckhouses normally manned, and lifeboats, liferafts and muster areas facing the cargo area, are also to be capable of being served by one of the fire pumps or the emergency fire pump, if a fire in one compartment could disable both fire pumps.

5. Water pumps normally used for other services may be arranged to supply the water-spray system main supply line. 【See Guidance】

6. All pipes, valves, nozzles and other fittings in the water-spray system are to be resistant to corrosion by seawater. Piping, fittings and related components within the cargo area (except gaskets) are to be designed to withstand 925 °C. The water-spray system is to be arranged with in-line filters to prevent blockage of pipes and nozzles. In addition, means is to be provided to back-flush the system with fresh water.

7. Remote starting of pumps supplying the water-spray system and remote operation of any normally closed valves in the system is to be arranged in suitable locations outside the cargo area, adjacent to the accommodation spaces and readily accessible and operable in the event of fire in the protected areas.

8. After installation, the pipes, valves, fittings and assembled system are to be subject to a tightness and function test.

1104. Dry chemical powder fire-extinguishing systems (IGC Code 11.4) 【See Guidance】

1. Ships in which the carriage of flammable products is intended is to be fitted with fixed dry chemical powder fire-extinguishing systems, approved by the Society based on **IMO MSC.1/Circ. 1315./Rev.1** for the purpose of firefighting on the deck in the cargo area, including any cargo liquid and vapour discharge and loading connections on deck and bow or stern cargo handling areas, as applicable. *(2023)*

2. The system is to be capable of delivering powder from at least two hand hose lines, or a combination of monitor/hand hose lines, to any part of the exposed cargo liquid and vapour piping, load/unload connection and exposed gas process units.

3. The dry chemical powder fire-extinguishing system is to be designed with not less than two independent units. Any part required to be protected by **2** is to be capable of being reached from not less than two independent units with associated controls, pressurizing medium fixed piping, monitors or hand hose lines. For ships with a cargo capacity of less than 1,000 m^3, only one such unit need be fitted. A monitor is to be arranged to protect any load/unload connection area and be capable of actuation and discharge both locally and remotely. The monitor is not required to be remotely aimed, if it can deliver the necessary powder to all required areas of coverage from a single position. One hose line is to be provided at both port- and starboard side at the end of the cargo area facing the accommodation and readily available from the accommodation.

4. The capacity of a monitor is to be not less than 10 kg/s. Hand hose lines are to be non-kinkable and be fitted with a nozzle capable of on/off operation and discharge at a rate not less than 3.5 kg/s. The maximum discharge rate is to allow operation by one man. The length of a hand hose line is not to exceed 33 m. Where fixed piping is provided between the powder container and a hand hose line or monitor, the length of piping is not to exceed that length which is capable of maintaining the powder in a fluidized state during sustained or intermittent use, and which can be purged of powder when the system is shut down. Hand hose lines and nozzles are to be of weather-resistant construction or stored in weather resistant housing or covers and be readily accessible.

5. Hand hose lines are to be considered to have a maximum effective distance of coverage equal to the length of hose. Special consideration is to be given where areas to be protected are substantially higher than the monitor or hand hose reel locations.

6. Ships fitted with bow/stern load/unload connections are to be provided with independent dry powder unit protecting the cargo liquid and vapour piping, aft or forward of the cargo area, by hose lines and a monitor covering the bow/stern load/unload complying with the requirements of **Par 1** to **5**.

7. Ships intended for operation as listed in **101. 6** are to be subject to special consideration.

8. After installation, the pipes, valves, fittings and assembled systems are to be subjected to a tightness test and functional testing of the remote and local release stations. The initial testing is also to include a discharge of sufficient amounts of dry chemical powder to verify that the system is in proper working order. All distribution piping is to be blown through with dry air to ensure that the piping is free of obstructions.

1105. Enclosed spaces containing cargo handling equipment (IGC Code 11.5)

1. Enclosed spaces meeting the criteria of cargo machinery spaces in **105. 9**, and the cargo motor room within the cargo area of any ship, are to be provided with a fixed fire-extinguishing system complying with the provisions of the FSS Code and taking into account the necessary concentrations/application rate required for extinguishing gas fires. **【See Guidance】**

2. Enclosed spaces meeting the criteria of cargo machinery spaces in **303.**, within the cargo area of ships that are dedicated to the carriage of a restricted number of cargoes, are to be protected by an appropriate fire-extinguishing system for the cargo carried.

3. Turret compartments of any ship are to be protected by internal water spray, with an application rate of not less than 10 $\ell/m^2/min$ of the largest projected horizontal surface. If the pressure of the gas flow through the turret exceeds 4 MPa, the application rate is to be increased to 20 $\ell/m^2/min$. The system is to be designed to protect all internal surfaces.

1106. Fire-fighter's outfits (IGC Code 11.6)

1. Every ship carrying flammable products is to carry fire-fighter's outfits complying with the requirements of regulation II-2/10.10 of the SOLAS Convention, as follows:

Table 7.5.10

Total cargo capacity	Number of outfits
5,000 m^3 and below	4
above 5,000 m^3	5

2. Additional requirements for safety equipment are given in **Sec 14.**

3. Any breathing apparatus required as part of a fire-fighter's outfit are to be a self-contained compressed air operated breathing apparatus having a capacity of at least 1,200 ℓ of free air.

Section 12 Mechanical Ventilation in the Cargo Area

The requirements of this Section replace the requirements of SOLAS regulations II-2/4.5.2.6 and II-2/4.5.4.1.

1201. Spaces required to be entered during normal cargo handling operations (IGC Code 12.1)

1. Electric motor rooms, cargo compressor and pump-rooms, spaces containing cargo handling equipment and other enclosed spaces where cargo vapours may accumulate are to be fitted with fixed artificial ventilation systems capable of being controlled from outside such spaces. The ventilation is to be run continuously to prevent the accumulation of toxic and/or flammable vapours, with a means of monitoring acceptable to the Society to be provided. A warning notice requiring the use of such ventilation prior to entering is to be placed outside the compartment.

2. Artificial ventilation inlets and outlets are to be arranged to ensure sufficient air movement through the space to avoid accumulation of flammable, toxic or asphyxiant vapours, and to ensure a safe working environment.

3. The ventilation system is to have a capacity of not less than 30 changes of air per hour, based upon the total volume of the space. As an exception, non-hazardous cargo control rooms may have eight changes of air per hour.

4. Where a space has an opening into an adjacent more hazardous space or area, it is to be maintained at an overpressure. It may be made into a less hazardous space or non-hazardous space by overpressure protection in accordance with recognized standards.

5. Ventilation ducts, air intakes and exhaust outlets serving artificial ventilation systems are to be positioned in accordance with recognized standards.(eg., IEC 60092-502:1999)

6. Ventilation ducts serving hazardous areas are not to be led through accommodation, service and machinery spaces or control stations, except as allowed in **Sec 16**.

7. Electric motors' driving fans are to be placed outside the ventilation ducts that may contain flammable vapours. Ventilation fans are not to produce a source of ignition in either the ventilated space or the ventilation system associated with the space. For hazardous areas, ventilation fans and ducts, adjacent to the fans, are to be of non-sparking construction, as defined below: **【See Guidance】**
   (1) impellers or housing of non-metallic construction, with due regard being paid to the elimination of static electricity
   (2) impellers and housing of non-ferrous materials
   (3) impellers and housing of austenitic stainless steel
   (4) ferrous impellers and housing with design tip clearance of not less than 13 mm.
   Any combination of an aluminium or magnesium alloy fixed or rotating component and a ferrous fixed or rotating component, regardless of tip clearance, is considered a sparking hazard and is not to be used in these places.

8. Where fans are required by this Section, full required ventilation capacity for each space are to be available after failure of any single fan, or spare parts are to be provided comprising a motor, starter spares and complete rotating element, including bearings of each type.

9. Protection screens of not more than 13 mm square mesh are to be fitted to outside openings of ventilation ducts.

10. Where spaces are protected by pressurization, the ventilation is to be designed and installed in accordance with recognized standards.(eg., IEC 60092-502:1999)

1202. Spaces not normally entered (IGC Code 12.2) 【See Guidance】

1. Enclosed spaces where cargo vapours may accumulate are to be capable of being ventilated to ensure a safe environment when entry into them is necessary. This is to be capable of being achieved without the need for prior entry.

2. For permanent installations, the capacity of 8 air changes per hour is to be provided and for portable systems, the capacity of 16 air changes per hour.

3. Fans or blowers are to be clear of personnel access openings, and are to comply with **1201. 7**.

Section 13 Instrumentation and Automation Systems

1301. General (IGC Code 13.1)

1. Each cargo tank is to be provided with a means for indicating level, pressure and temperature of the cargo. Pressure gauges and temperature indicating devices are to be installed in the liquid and vapour piping systems, in cargo refrigeration installations.

2. If loading and unloading of the ship is performed by means of remotely controlled valves and pumps, all controls and indicators associated with a given cargo tank are to be concentrated in one control position. 【See Guidance】

3. Instruments are to be tested to ensure reliability under the working conditions, and recalibrated at regular intervals. Test procedures for instruments and the intervals between recalibration are to be in accordance with manufacturer's recommendations. 【See Guidance】

1302. Level indicators for cargo tanks (IGC Code 13.2) 【See Guidance】

1. Each cargo tank is to be fitted with liquid level gauging device(s), arranged to ensure that a level reading is always obtainable whenever the cargo tank is operational. The device(s) are to be designed to operate throughout the design pressure range of the cargo tank and at temperatures within the cargo operating temperature range.

2. Where only one liquid level gauge is fitted, it is to be arranged so that it can be maintained in an operational condition without the need to empty or gas-free the tank.

3. Cargo tank liquid level gauges may be of the following types, subject to special requirements for particular cargoes shown in column "g" in the table of **Sec 19**:

(1) indirect devices, which determine the amount of cargo by means such as weighing or in-line flow metering

(2) closed devices which do not penetrate the cargo tank, such as devices using radio-isotopes or ultrasonic devices

(3) closed devices which penetrate the cargo tank, but which form part of a closed system and keep the cargo from being released, such as float type systems, electronic probes, magnetic probes and bubble tube indicators. If closed gauging device is not mounted directly onto the tank, it is to be provided with a shutoff valve located as close as possible to the tank

(4) restricted devices which penetrate the tank and, when in use, permit a small quantity of cargo vapour or liquid to escape to the atmosphere, such as fixed tube and slip tube gauges. When not in use, the devices are to be kept completely closed. The design and installation are to ensure that no dangerous escape of cargo can take place when opening the device. Such gauging devices are to be so designed that the maximum opening does not exceed 1.5 mm diameter or equivalent area, unless the device is provided with an excess flow valve.

1303. Overflow control (IGC Code 13.3) 【See Guidance】

1. Except as provided in **Par 4**, each cargo tank is to be fitted with a high liquid level alarm operating independently of other liquid level indicators and giving an audible and visual warning when activated.

2. An additional sensor operating independently of the high liquid level alarm is to automatically actuate a shutoff valve in a manner that will both avoid excessive liquid pressure in the loading line and prevent the tank from becoming liquid full.

3. The emergency shutdown valve referred to in **505.** and **1810.** may be used for this purpose. If another valve is used for this purpose, the same information as referred to in **1810. 2** (1) (C) is to be available on board. During loading, whenever the use of these valves may possibly create a potential excess pressure surge in the loading system, alternative arrangements such as limiting the loading rate are to be used.

4. A high liquid level alarm and automatic shut-off of cargo tank filling need not be required, when the cargo tank:

(1) is a pressure tank with a volume not more than 200 m^3 or

(2) is designed to withstand the maximum possible pressure during the loading operation, and such pressure is below that of the set pressure of the cargo tank relief valve.

5. The position of the sensors in the tank is to be capable of being verified before commissioning. At the first occasion of full loading after delivery and after each dry-docking, testing of high-level alarms is to be conducted by raising the cargo liquid level in the cargo tank to the alarm point.

6. All elements of the level alarms, including the electrical circuit and the sensor(s), of the high, and overfill alarms, are to be capable of being functionally tested. Systems are to be tested prior to cargo operation in accordance with **1806. 2**.

7. Where arrangements are provided for overriding the overflow control system, they are to be such that inadvertent operation is prevented. When this override is operated, continuous visual indication is to be given at the relevant control station(s) and the navigation bridge.

1304. Pressure monitoring (IGC Code 13.4)

1. The vapour space of each cargo tank is to be provided with a direct reading gauge. Additionally, an indirect indication is to be provided at the control position required by **1301. 2**. Maximum and minimum allowable pressures are to be clearly indicated.

2. A high-pressure alarm and, if vacuum protection is required, a low-pressure alarm is to be provided on the navigation bridge and at the control position required by **1301. 2**. Alarms are to be activated before the set pressures are reached. **【See Guidance】**

3. For cargo tanks fitted with PRVs which can be set at more than one set pressure in accordance with **802. 7**, high-pressure alarms are to be provided for each set pressure. **【See Guidance】**

4. Each cargo-pump discharge line and each liquid and vapour cargo manifold are to be provided with at least one pressure indicator.

5. Local-reading manifold pressure indication is to be provided to indicate the pressure between ship's manifold valves and hose connections to the shore.

6. Hold spaces and interbarrier spaces without open connection to the atmosphere are to be provided with pressure indication.

7. All pressure indications provided are to be capable of indicating throughout the operating pressure range.

1305. Temperature indicating devices (IGC Code 13.5)

1. Each cargo tank is to be provided with at least two devices for indicating cargo temperatures, one placed at the bottom of the cargo tank and the second near the top of the tank, below the highest allowable liquid level. The lowest temperature for which the cargo tank has been designed, as shown on the International Certificate of Fitness for the Carriage of Liquefied Gases in Bulk, is to be clearly indicated by means of a sign on or near the temperature indicating devices.

2. The temperature indicating devices are to be capable of providing temperature indication across the expected cargo operating temperature range of the cargo tanks.

3. Where thermowells are fitted, they are to be designed to minimize failure due to fatigue in normal service.

1306. Gas detection (IGC Code 13.6)

1. Gas detection equipment is to be installed to monitor the integrity of the cargo containment, cargo handling and ancillary systems, in accordance with this Article.

2. A permanently installed system of gas detection and audible and visual alarms are to be fitted in:

(1) all enclosed cargo and cargo machinery spaces (including turrets compartments) containing gas piping, gas equipment or gas consumers

(2) other enclosed or semi-enclosed spaces where cargo vapours may accumulate, including interbarrier spaces and hold spaces for independent tanks other than type C tanks

(3) airlocks
(4) spaces in gas-fired internal combustion engines, referred to in **1607. 3** (3)
(5) ventilation hoods and gas ducts required by **Sec 16**
(6) cooling/heating circuits, as required by **708. 4**
(7) inert gas generator supply headers
(8) motor rooms for cargo handling machinery.

3. Gas detection equipment is to be designed, installed and tested in accordance with recognized standards(eg., IEC 60079-28-1) and is to be suitable for the cargoes to be carried in accordance with column "f" in table of **Sec 19**.

4. Where indicated by an "A" in column "f" in the table of **Sec 19** ships certified for carriage of non-flammable products, oxygen deficiency monitoring is to be fitted in cargo machinery spaces and hold spaces for independent tanks other than type C tank. Furthermore, oxygen deficiency monitoring equipment is to be installed in enclosed or semi-enclosed spaces containing equipment that may cause an oxygen-deficient environment such as nitrogen generators, inert gas generators or nitrogen cycle refrigerant systems.

5. In the case of toxic products or both toxic and flammable products, except when column "i" in the table of **Sec 19** refers to **1705. 3**, portable equipment can be used for the detection of toxic products as an alternative to a permanently installed system. This equipment is to be used prior to personnel entering the spaces listed in **Par 2** and at 30-minute intervals while they remain in the space. **【See Guidance】**

6. In the case of gases classified as toxic products, hold spaces and interbarrier spaces are to be provided with a permanently installed piping system for obtaining gas samples from the spaces. Gas from these spaces is to be sampled and analysed from each sampling head location.

7. Permanently installed gas detection is to be of the continuous detection type, capable of immediate response. Where not used to activate safety shutdown functions required by **9** and **Sec 16,** sampling type detection may be accepted.

8. When sampling type gas detection equipment is used, the following requirements are to be met:
(1) the gas detection equipment is to be capable of sampling and analysing for each sampling head location sequentially at intervals not exceeding 30 min
(2) individual sampling lines from sampling heads to the detection equipment are to be fitted
(3) pipe runs from sampling heads is not to be led through non-hazardous spaces except as permitted by **9**.

9. The gas detection equipment may be located in a non-hazardous space, provided that the detection equipment such as sample piping, sample pumps, solenoids and analysing units are located in a fully enclosed steel cabinet with the door sealed by a gasket. The atmosphere within the enclosure is to be continuously monitored. At gas concentrations above 30% lower flammable limit (LFL) inside the enclosure, the gas detection equipment is to be automatically shut down.

10. Where the enclosure cannot be arranged directly on the forward bulkhead, sample pipes are to be of steel or equivalent material and be routed on their shortest way. Detachable connections, except for the connection points for isolating valves required in **11.** and analysing units, are not permitted.

11. When gas sampling equipment is located in a non-hazardous space, a flame arrester and a manual isolating valve are to be fitted in each of the gas sampling lines. The isolating valve is to be fitted on the nonhazardous side. Bulkhead penetrations of sample pipes between hazardous and non-hazardous areas are to maintain the integrity of the division penetrated. The exhaust gas is to be discharged to the open air in a safe location.

12. In every installation, the number and the positions of detection heads are to be determined with due regard to the size and layout of the compartment, the compositions and densities of the products intended to be carried and the dilution from compartment purging or ventilation and stagnant areas.

13. Any alarms status within a gas detection system required by **1306.** are to initiate an audible and visible alarm:
(1) on the navigation bridge
(2) at the relevant control station(s) where continuous monitoring of the gas levels is recorded
(3) at the gas detector readout location.

14. In the case of flammable products, the gas detection equipment provided for hold spaces and interbarrier spaces that are required to be inerted is to be capable of measuring gas concentrations of 0 % to 100 % by volume. 【See Guidance】

15. Alarms are to be activated when the vapour concentration by volume reaches the equivalent of 30 % LFL in air.

16. For membrane containment systems, the primary and secondary insulation spaces are to be able to be inerted and their gas content analysed individually. The alarm in the secondary insulation space is to be set in accordance with **15**, that in the primary space is set at a value approved by the Society.(See "Gas concentrations in the insulation spaces of membraned LNGC" published by SIGTTO)

17. For other spaces described by **2**, alarms are to be activated when the vapour concentration reaches 30 % LFL and safety functions required by **Sec 16** are to be activated before the vapour concentration reaches 60 % LFL. The crankcases of internal combustion engines that can run on gas are to be arranged to alarm before 100 % LFL.

18. Gas detection equipment is to be so designed that it may readily be tested. Testing and calibration are to be carried out at regular intervals. Suitable equipment for this purpose is to be carried on board and be used in accordance with the manufacturer's recommendations. Permanent connections for such test equipment are to be fitted.

19. Every ship is to be provided with at least two sets of portable gas detection equipment that meet the requirement of **3.** or an acceptable national or international standard.

20. A suitable instrument for the measurement of oxygen levels in inert atmospheres is to be provided. 【See Guidance】

1307. Additional requirements for containment systems requiring a secondary barrier (IGC Code 13.7)

1. Integrity of barriers

Where a secondary barrier is required, permanently installed instrumentation is to be provided to detect when the primary barrier fails to be liquid-tight at any location or when liquid cargo is in contact with the secondary barrier at any location. This instrumentation is to consist of appropriate gas detecting devices according to **1306**. However, the instrumentation need not be capable of locating the area where liquid cargo leaks through the primary barrier or where liquid cargo is in contact with the secondary barrier.

2. Temperature indication devices 【See Guidance】

(1) The number and position of temperature-indicating devices are to be appropriate to the design of the containment system and cargo operation requirements.

(2) When cargo is carried in a cargo containment system with a secondary barrier, at a temperature lower than −55 °C, temperature-indicating devices are to be provided within the insulation or on the hull structure adjacent to cargo containment systems. The devices are to give readings at regular intervals and, where applicable, alarm of temperatures approaching the lowest for which the hull steel is suitable.

(3) If cargo is to be carried at temperatures lower than −55 °C, the cargo tank boundaries, if appropriate for the design of the cargo containment system, are to be fitted with a sufficient number of temperature indicating devices to verify that unsatisfactory temperature gradients do not occur.

(4) For the purposes of design verification and determining the effectiveness of the initial cooldown procedure on a single or series of similar ships, one tank is to be fitted with devices in excess of those required in (1). These devices may be temporary or permanent and only need to be fitted to the first ship, when a series of similar ships is built.

1308. Automation systems (IGC Code 13.8)

1. The requirements of this Article are to apply where automation systems are used to provide instrumented control, monitoring/alarm or safety functions required by this Chapter.

2. Automation systems are to be designed, installed and tested in accordance with recognized

standards.(eg., IEC 60092-504)

3. Hardware is to be capable of being demonstrated to be suitable for use in the marine environment by type approval or other means.

4. Software is to be designed and documented for ease of use, including testing, operation and maintenance.

5. The user interface is to be designed such that the equipment under control can be operated in a safe and effective manner at all times.

6. Automation systems are to be arranged such that a hardware failure or an error by the operator does not lead to an unsafe condition. Adequate safeguards against incorrect operation are to be provided.

7. Appropriate segregation is to be maintained between control, monitoring/alarm and safety functions to limit the effect of single failures. This is to be taken to include all parts of the automation systems that are required to provide specified functions, including connected devices and power supplies.

8. Automation systems are to be arranged such that the software configuration and parameters are protected against unauthorized or unintended change.

9. A management of change process is to be applied to safeguard against unexpected consequences of modification. Records of configuration changes and approvals are to be maintained on board.

10. Processes for the development and maintenance of integrated systems are to be in accordance with recognized standards(eg., ISO/IEC 15288 and ISO 17894). These processes are to include appropriate risk identification and management.

1309. System integration (IGC Code 13.9) 【See Guidance】

1. Essential safety functions are to be designed such that risks of harm to personnel or damage to the installation or the environment are reduced to a level acceptable to the Society, both in normal operation and under fault conditions. Functions are to be designed to fail-safe. Roles and responsibilities for integration of systems are to be clearly defined and agreed by relevant parties.

2. Functional requirements of each component subsystem are to be clearly defined to ensure that the integrated system meets the functional and specified safety requirements and takes account of any limitations of the equipment under control.

3. Key hazards of the integrated system are to be identified using appropriate risk-based techniques.

4. The integrated system is to have a suitable means of reversionary control.

5. Failure of one part of the integrated system is not to affect the functionality of other parts, except for those functions directly dependent on the defective part.

6. Operation with an integrated system is to be at least as effective as it would be with individual standalone equipment or systems.

7. The integrity of essential machinery or systems, during normal operation and fault conditions, is to be demonstrated.

Section 14 Personnel Protection

1401. Protective equipment (IGC Code 14.1)

1. Suitable protective equipment, including eye protection to a recognized national or international standard, is to be provided for protection of crew members engaged in normal cargo operations, taking into account the characteristics of the products being carried.

2. Personal protective and safety equipment required in this Section are to be kept in suitable, clearly marked lockers located in readily accessible places.

3. The compressed air equipment is to be inspected at least once a month by a responsible officer and the inspection logged in the ship's records. This equipment is also to be inspected and tested by a competent person at least once a year.

1402. First-aid equipment (IGC Code 14.2)

1. A stretcher that is suitable for hoisting an injured person from spaces below deck is to be kept in a readily accessible location.

2. The ship is to have onboard medical first-aid equipment, including oxygen resuscitation equipment, based on the requirements of the Medical First Aid Guide (MFAG) for the cargoes listed on the International Certificate of Fitness for the Carriage of Liquefied Gases in Bulk.

1403. Safety equipment (IGC Code 14.3)

1. Sufficient, but not less than three complete sets of safety equipment are to be provided in addition to the firefighter's outfits required by **1106. 1**. Each set is to provide adequate personal protection to permit entry and work in a gas-filled space. This equipment is to take into account the nature of the cargoes, listed on the International Certificate of Fitness for the Carriage of Liquified Gases in Bulk.

2. Each complete set of safety equipment is to consist of:
   (1) one self-contained positive pressure air-breathing apparatus incorporating full face mask, not using stored oxygen and having a capacity of at least 1,200 ℓ of free air. Each set is to be compatible with that required by **1106. 1**
   (2) protective clothing, boots and gloves to a recognized standard
   (3) steel-cored rescue line with belt
   (4) explosion-proof lamp.

3. An adequate supply of compressed air is to be provided and is to consist of:
   (1) at least one fully charged spare air bottle for each breathing apparatus required by **1**
   (2) an air compressor of adequate capacity capable of continuous operation, suitable for the supply of high pressure air of breathable quality
   (3) a charging manifold capable of dealing with sufficient spare breathing apparatus air bottles for the breathing apparatus required by **1**.

1404. Personnel protection requirements for individual products (IGC Code 14.4)

1. Requirements of this Article are to apply to ships carrying products for which those paragraphs are listed in column "i" in the table of **Sec 19**.

2. Suitable respiratory and eye protection for emergency escape purposes are to be provided for every person on board, subject to the following:
   (1) filter-type respiratory protection is unacceptable
   (2) self-contained breathing apparatus are to have at least a duration of service of 15 min
   (3) emergency escape respiratory protection is not to be used for firefighting or cargo-handling purposes and is to be marked to that effect.

3. One or more suitably marked decontamination showers and eyewash stations are to be available on deck, taking into account the size and layout of the ship. The showers and eyewashes are to be operable in all ambient conditions.

4. The protective clothing required under **1403. 2** (2) is to be gastight.

Section 15 Filling Limits for Cargo Tanks

1501. Definitions (IGC Code 15.1)

1. Filling limit (FL) means the maximum liquid volume in a cargo tank relative to the total tank volume when the liquid cargo has reached the reference temperature.

2. Loading limit (LL) means the maximum allowable liquid volume relative to the tank volume to which the tank may be loaded.

3. Reference temperature means (for the purposes of this Section only):

(1) when no cargo vapour pressure/temperature control, as referred to in **Sec 7**, is provided, the temperature corresponding to the vapour pressure of the cargo at the set pressure of the PRVs; and

(2) when a cargo vapour pressure/temperature control, as referred to in **Sec 7**, is provided, the temperature of the cargo upon termination of loading, during transport or at unloading, whichever is the greatest.

4. Ambient design temperature for unrestricted service means sea temperature of 32 °C and air temperature of 45 °C. However, lesser values of these temperatures may be accepted by the Society for ships operating in restricted areas or on voyages of restricted duration, and account may be taken in such cases of any insulation of the tanks. Conversely, higher values of these temperatures may be required for ships permanently operating in areas of high-ambient temperature.

1502. General requirements (IGC Code 15.2)

1. The maximum filling limit of cargo tanks are to be so determined that the vapour space has a minimum volume at reference temperature allowing for:

(1) tolerance of instrumentation such as level and temperature gauges;

(2) volumetric expansion of the cargo between the PRV set pressure and the maximum allowable rise stated in **804**; and

(3) an operational margin to account for liquid drained back to cargo tanks after completion of loading, operator reaction time and closing time of valves, see **505.** and **1810. 2.** (1) (D).

1503. Default filling limit (IGC Code 15.3)

The default value for the filling limit (FL) of cargo tanks is 98 % at the reference temperature. Exceptions to this value is to meet the requirements of **1504**.

1504. Determination of increased filling limit (IGC Code 15.4) 【See Guidance】

1. A filling limit greater than the limit of 98 % specified in **1503.** may be permitted under the trim and list conditions specified in **802. 17**, providing:

(1) no isolated vapour pockets are created within the cargo tank

(2) the PRV inlet arrangement is to remain in the vapour space and

(3) allowances need to be provided for:

(A) volumetric expansion of the liquid cargo due to the pressure increase from the MARVS to full flow relieving pressure in accordance with **804. 1**

(B) an operational margin of minimum 0.1 % of tank volume and

(C) tolerances of instrumentation such as level and temperature gauges.

2. In no case is to a filling limit exceeding 99.5 % at reference temperature be permitted.

1505. Maximum loading limit (IGC Code 15.5) 【See Guidance】

1. The maximum loading limit(LL) to which a cargo tank may be loaded is to be determined by the following formula:

$$LL = FL\frac{\rho_R}{\rho_L}$$

where:

LL : loading limit as defined in **1501. 2** (%)

FL : filling limit as specified in 1503 or 1504 (%)

ρ_R : relative density of cargo at the reference temperature

ρ_L : relative density of cargo at the loading temperature.

2. The Society may allow type *C* tanks to be loaded according to the formula in **1** with the relative density ρ_R as defined below, provided that the tank vent system has been approved in accordance with **802. 18**:

ρ_R : relative density of cargo at the highest temperature that the cargo may reach upon termination of loading, during transport, or at unloading, under the ambient design temperature conditions described in **1501. 4**.

This paragraph does not apply to products requiring a type 1G ship.

1506. Information to be provided to the master (IGC Code 15.6)

1. A document is to be provided to the ship, specifying the maximum allowable loading limits for each cargo tank and product, at each applicable loading temperature and maximum reference temperature. The information in this document is to be approved by the Society.

2. Pressures at which the PRVs have been set are also to be stated in the document.

3. A copy of the above document is to be permanently kept on board by the master.

Section 16 Use of Cargo as Fuel

1601. General (IGC Code 16.1)

1. Except as provided for in **1609**, methane (LNG) is the only cargo whose vapour or boil-off gas may be utilized in machinery spaces of category A, and, in these spaces, it may be utilized only in systems such as boilers, inert gas generators, internal combustion engines, gas combustion unit and gas turbines.

1602. Use of cargo vapour as fuel (IGC Code 16.2)

1. This Article addresses the use of cargo vapour as fuel in systems such as boilers, inert gas generators, internal combustion engines, gas combustion units and gas turbines.

(1) For vaporized LNG, the fuel supply system is to comply with the requirements of **1604. 1**, 2 and 3.

(2) For vaporized LNG, gas consumers are to exhibit no visible flame and are to maintain the uptake exhaust temperature below 535 °C.

1603. Arrangement of spaces containing gas consumers (IGC Code 16.3)

1. Spaces in which gas consumers are located are to be fitted with a mechanical ventilation system that is arranged to avoid areas where gas may accumulate, taking into account the density of the vapour and potential ignition sources. The ventilation system is to be separated from those serving other spaces.

2. Gas detectors are to be fitted in these spaces, particularly where air circulation is reduced. The gas detection system is to comply with the requirements of **Sec 13**.

3. Electrical equipment located in the double wall pipe or duct specified in **1604. 3** is to comply with the requirements of **Sec 10**.

4. All vents and bleed lines that may contain or be contaminated by gas fuel are to be routed to a safe location external to the machinery space and be fitted with a flame screen.

1604. Gas fuel supply (IGC Code 16.4)

1. General

(1) The requirements of this Article are to apply to gas fuel supply piping outside of the cargo area. Fuel piping is not to pass through accommodation spaces, service spaces, electrical equipment rooms or control stations. The routeing of the pipeline is to take into account potential hazards, due to mechanical damage, in areas such as stores or machinery handling areas.

(2) Provision is to be made for inerting and gas-freeing that portion of the gas fuel piping systems located in the machinery space.

2. Leak detection

Continuous monitoring and alarms are to be provided to indicate a leak in the piping system in enclosed spaces and shut down the relevant gas fuel supply.

3. Routeing of fuel supply pipes

Fuel piping may pass through or extend into enclosed spaces other than those mentioned in **1**, provided it fulfils one of the following conditions:

(1) it is of a double-wall design with the space between the concentric pipes pressurized with inert gas at a pressure greater than the gas fuel pressure. The master gas fuel valve, as required by **6**, closes automatically upon loss of inert gas pressure; or

(2) it is installed in a pipe or duct equipped with mechanical exhaust ventilation having a capacity of at least 30 air changes per hour and is arranged to maintain a pressure less than the atmospheric pressure. The mechanical ventilation is in accordance with **Sec 12**, as applicable. The ventilation is always in operation when there is fuel in the piping and the master gas fuel valve, as required by **6**, closes automatically if the required air flow is not established and maintained by the exhaust ventilation system. The inlet or the duct may be from a non-hazardous machinery space, and the ventilation outlet is in a safe location.

4. Requirements for gas fuel with pressure greater than 1 MPa

(1) Fuel delivery lines between the high-pressure fuel pumps/compressors and consumers are to be protected with a double-walled piping system capable of containing a high pressure line failure, taking into account the effects of both pressure and low temperature. A single-walled pipe in the cargo area up to the isolating valve(s) required by **6** is acceptable.

(2) The arrangement in **3** (2) may also be acceptable providing the pipe or trunk is capable of containing a high pressure line failure, according to the requirements of **7** and taking into account the effects of both pressure and possible low temperature and providing both inlet and exhaust of the outer pipe or trunk are in the cargo area.

5. Gas consumer isolation

The supply piping of each gas consumer unit is to be provided with gas fuel isolation by automatic double block and bleed, vented to a safe location, under both normal and emergency operation. The automatic valves are to be arranged to fail to the closed position on loss of actuating power. In a space containing multiple consumers, the shutdown of one is not to affect the gas supply to the others.

6. Spaces containing gas consumers *(2019)*

(1) It is to be possible to isolate the gas fuel supply to each individual space containing a gas consumer(s) or through which fuel gas supply piping is run, with an individual master valve, which is located within the cargo area. The isolation of gas fuel supply to a space is not to affect the gas supply to other spaces containing gas consumers if they are located in two or more spaces, and it is not to cause loss of propulsion or electrical power.

(2) If the double barrier around the gas supply system is not continuous due to air inlets or other openings, or if there is any point where single failure will cause leakage into the space, the individual master valve for the space is to operate under the following circumstances:

(A) automatically by:

(a) gas detection within the space

(b) leak detection in the annular space of a double-walled pipe

(c) leak detection in other compartments inside the space, containing single-walled gas piping

(d) loss of ventilation in the annular space of a double-walled pipe and

(e) loss of ventilation in other compartments inside the space, containing single-walled gas piping and

(B) manually from within the space, and at least one remote location.

(3) If the double barrier around the gas supply system is continuous, an individual master valve located in the cargo area may be provided for each gas consumer inside the space. The individual master valve is to operate under the following circumstances:

(A) automatically by:

(a) leak detection in the annular space of a double-walled pipe served by that individual master valve

(b) leak detection in other compartments containing single-walled gas piping that is part of the supply system served by the individual master valve and

(c) loss of ventilation or loss of pressure in the annular space of a double-walled pipe and

(B) manually from within the space, and at least one remote location.

7. Piping and ducting construction

Gas fuel piping in machinery spaces is to comply with **501.** to **509.**, as applicable. The piping is to, as far as practicable, have welded joints. Those parts of the gas fuel piping that are not enclosed in a ventilated pipe or duct according to **3**, and are on the weather decks outside the cargo area, is to have full penetration butt-welded joints and is to be fully radiographed.

8. Gas detection

Gas detection systems provided in accordance with the requirements of this Section are to activate the alarm at 30 % LFL and shut down the master gas fuel valve required by **6** at not more than 60 % LFL (see **1306. 17**).

1605. Gas fuel plant and related storage tanks (IGC Code 16.5)

1. Provision of gas fuel

All equipment (heaters, compressors, vaporizers, filters, etc.) for conditioning the cargo and/or cargo

boil off vapour for its use as fuel, and any related storage tanks, is to be located in the cargo area. If the equipment is in an enclosed space, the space is to be ventilated according to **1201.** and be equipped with a fixed fire extinguishing system, according to 1105., and with a gas detection system according to 1306., as applicable.

2. Remote stops

(1) All rotating equipment utilized for conditioning the cargo for its use as fuel is to be arranged for manual remote stop from the engine-room. Additional remote stops are to be located in areas that are always easily accessible, typically cargo control room, navigation bridge and fire control station.

(2) The fuel supply equipment is to be automatically stopped in the case of low suction pressure or fire detection. Unless expressly provided otherwise, the requirements of **1810.** need not apply to gas fuel compressors or pumps when used to supply gas consumers.

3. Heating and cooling mediums

If the heating or cooling medium for the gas fuel conditioning system is returned to spaces outside the cargo area, provisions are to be made to detect and alarm the presence of cargo/cargo vapour in the medium. Any vent outlet is to be in a safe position and fitted with an effective flame screen of an approved type.

4. Piping and pressure vessels

Piping or pressure vessels fitted in the gas fuel supply system are to comply with **Sec 5**.

1606. Special requirements for main boilers (IGC Code 16.6)

1. Arrangements

(1) Each boiler is to have a separate exhaust uptake.

(2) Each boiler is to have a dedicated forced draught system. A crossover between boiler force draught systems may be fitted for emergency use providing that any relevant safety functions are maintained.

(3) Combustion chambers and uptakes of boilers are to be designed to prevent any accumulation of gaseous fuel.

2. Combustion equipment

(1) The burner systems are to be of dual type, suitable to burn either: oil fuel or gas fuel alone, or oil and gas fuel simultaneously.

(2) Burners are to be designed to maintain stable combustion under all firing conditions.

(3) An automatic system is to be fitted to change over from gas fuel operation to oil fuel operation without interruption of the boiler firing, in the event of loss of gas fuel supply.

(4) Gas nozzles and the burner control system are to be configured such that gas fuel can only be ignited by an established oil fuel flame, unless the boiler and combustion equipment is designed and approved by Society to light on gas fuel.

3. Safety 【See Guidance】

(1) There are to be arrangements to ensure that gas fuel flow to the burner is automatically cut-off, unless satisfactory ignition has been established and maintained.

(2) On the pipe of each gas-burner, a manually operated shut-off valve is to be fitted.

(3) Provisions are to be made for automatically purging the gas supply piping to the burners, by means of an inert gas, after the extinguishing of these burners.

(4) The automatic fuel changeover system required by **2** (3) is to be monitored with alarms to ensure continuous availability.

(5) Arrangements are to be made that, in case of flame failure of all operating burners, the combustion chambers of the boilers are automatically purged before relighting.

(6) Arrangements are to be made to enable the boilers to be manually purged.

1607. Special requirements for gas-fired internal combustion engines (IGC Code 16.7)

Dual fuel engines are those that employ gas fuel (with pilot oil) and oil fuel. Oil fuels may include distillate and residual fuels. Gas only engines are those that employ gas fuel only. 【See Guidance】

1. Arrangements

(1) When gas is supplied in a mixture with air through a common manifold, flame arrestors are to

be installed before each cylinder head.
(2) Each engine is to have its own separate exhaust.
(3) The exhausts are to be configured to prevent any accumulation of unburnt gaseous fuel.
(4) Unless designed with the strength to withstand the worst case overpressure due to ignited gas leaks, air inlet manifolds, scavenge spaces, exhaust system and crank cases are to be fitted with suitable pressure relief systems. Pressure relief systems are to lead to a safe location, away from personnel.
(5) Each engine is to be fitted with vent systems independent of other engines for crankcases, sumps and cooling systems.

2. Combustion equipment

(1) Prior to admission of gas fuel, correct operation of the pilot oil injection system on each unit is to be verified.
(2) For a spark ignition engine, if ignition has not been detected by the engine monitoring system within an engine specific time after opening of the gas supply valve, this is to be automatically shut off and the starting sequence terminated. It is to be ensured that any unburnt gas mixture is purged from the exhaust system.
(3) For dual-fuel engines fitted with a pilot oil injection system, an automatic system is to be fitted to change over from gas fuel operation to oil fuel operation with minimum fluctuation of the engine power.
(4) In the case of unstable operation on engines with the arrangement in (3) when gas firing, the engine is to automatically change to oil fuel mode.

3. Safety

(1) During stopping of the engine, the gas fuel is to be automatically shut off before the ignition source.
(2) Arrangements are to be provided to ensure that there is no unburnt gas fuel in the exhaust gas system prior to ignition.
(3) Crankcases, sumps, scavenge spaces and cooling system vents are to be provided with gas detection (see **1306. 17**).
(4) Provision is to be made within the design of the engine to permit continuous monitoring of possible sources of ignition within the crank case. Instrumentation fitted inside the crankcase is to be in accordance with the requirements of **Sec 10**.
(5) A means is to be provided to monitor and detect poor combustion or misfiring that may lead to unburnt gas fuel in the exhaust system during operation. In the event that it is detected, the gas fuel supply is to be shut down. Instrumentation fitted inside the exhaust system is to be in accordance with the requirements of **Sec 10**.

1608. Special requirements for gas turbine (IGC Code 16.8)

1. Arrangements

(1) Each turbine is to have its own separate exhaust.
(2) The exhausts are to be appropriately configured to prevent any accumulation of unburnt gas fuel.
(3) Unless designed with the strength to withstand the worst case overpressure due to ignited gas leaks, pressure relief systems are to be suitably designed and fitted to the exhaust system, taking into consideration explosions due to gas leaks. Pressure relief systems within the exhaust uptakes are to be lead to a nonhazardous location, away from personnel.

2. Combustion equipment

An automatic system is to be fitted to change over easily and quickly from gas fuel operation to oil fuel operation with minimum fluctuation of the engine power.

3. Safety

(1) Means is to be provided to monitor and detect poor combustion that may lead to unburnt gas fuel in the exhaust system during operation. In the event that it is detected, the gas fuel supply is to be shut down.
(2) Each turbine is to be fitted with an automatic shutdown device for high exhaust temperatures.

1609. Alternative fuels and technologies (IGC Code 16.9)

1. If acceptable to the Society, other cargo gases may be used as fuel, providing that the same level

of safety as natural gas in this Chapter is ensured. Where LPG cargo is used as fuel, **Annex 7A-5 is to apply.** *(2021)* **【See Guidance】**

2. The use of cargoes identified as toxic products is not to be permitted.

3. For cargoes other than LNG, the fuel supply system is to comply with the requirements of **1604. 1**, **1604. 2**, **1604. 3** and **1605**, as applicable, and is to include means for preventing condensation of vapour in the system.

4. Liquefied gas fuel supply systems are to comply with **1604. 5.**

5. In addition to the requirements of **1604. 3** (2), both ventilation inlet and outlet are to be located outside the machinery space. The inlet shall be in a non-hazardous area and the outlet shall be in a safe location.

Section 17 Special Requirements

1701. General (IGC Code 17.1)

The requirements of this Section are applicable where reference thereto is made in column "i" in the table of **Sec 19.** These requirements are additional to the general requirements of this Chapter.

1702. Materials of construction (IGC Code 17.2)

1. Materials that may be exposed to cargo during normal operations are to be resistant to the corrosive action of the gases. In addition, the following materials of construction for cargo tanks and associated pipelines, valves, fittings and other items of equipment normally in direct contact with the cargo liquid or vapour are not to be used for certain products as specified in column "i" in the table of **Sec 19**:

(1) mercury, copper and copper-bearing alloys, and zinc
(2) copper, silver, mercury, magnesium and other acetylide-forming metals
(3) aluminium and aluminium-bearing alloys
(4) copper, copper alloys, zinc and galvanized steel
(5) aluminium, copper and alloys of either
(6) copper and copper-bearing alloys with greater than 1 % copper.

1703. Independent tanks (IGC Code 17.3)

1. Products are to be carried in independent tanks only.

2. Products are to be carried in type C independent tanks, and the requirements of **701. 2** are to apply. The design pressure of the cargo tank is to take into account any padding pressure or vapour discharge unloading pressure.

1704. Refrigeration systems (IGC Code 17.4)

1. Only the indirect system described in **703. 1** (2) is to be used.

2. For a ship engaged in the carriage of products that readily form dangerous peroxides, recondensed cargo is not to be allowed to form stagnant pockets of uninhibited liquid. This may be achieved either by:

(1) using the indirect system described in **703. 1** (2), with the condenser inside the cargo tank; or
(2) using the direct system or combined system described in **703. 1** (1) and (3) respectively, or the indirect system described in **703. 1** (2) with the condenser outside the cargo tank, and designing the condensate system to avoid any places in which liquid could collect and be retained. Where this is impossible, inhibited liquid is to be added upstream of such a place.

3. If the ship is to consecutively carry products as specified in **2** with a ballast passage between, all uninhibited liquid is to be removed prior to the ballast voyage. If a second cargo is to be carried between such consecutive cargoes, the reliquefaction system is to be thoroughly drained and purged before loading the second cargo. Purging is to be carried out using either inert gas or vapour from the second cargo, if compatible. Practical steps are to be taken to ensure that polymers or peroxides do not accumulate in the cargo system.

1705. Cargoes requiring type 1G ship (IGC Code 17.5)

1. All butt-welded joints in cargo piping exceeding 75 mm in diameter are to be subject to 100 % radiography.

2. Gas sampling lines are not to be led into or through non-hazardous areas. Alarms referred to in **1306. 2** are to be activated when the vapour concentration reaches the threshold limiting value.

3. The alternative of using portable gas detection equipment in accordance with **1306. 5** is not to be permitted.

4. Cargo control rooms are to be located in a non-hazardous area and, additionally, all instrumentation is to be of the indirect type.

5. Personnel is to be protected against the effects of a major cargo release by the provision of a space within the accommodation area that is designed and equipped to the satisfaction of the Society. 【See Guidance】

6. Notwithstanding the requirements in **302. 4** (3), access to forecastle spaces is not to be permitted through a door facing the cargo area, unless airlock in accordance with **306.** is provided.

7. Notwithstanding the requirements in **302. 7**, access to control rooms and machinery spaces of turret systems is not to be permitted through doors facing the cargo area.

1706. Exclusion of air from vapour spaces (IGC Code 17.6)

1. Air is to be removed from cargo tanks and associated piping before loading and then subsequently excluded by:
   (1) introducing inert gas to maintain a positive pressure. Storage or production capacity of the inert gas is to be sufficient to meet normal operating requirements and relief valve leakage. The oxygen content of inert gas is to, at no time, be greater than 0.2 % by volume; or
   (2) control of cargo temperatures such that a positive pressure is maintained at all times.

1707. Moisture control (IGC Code 17.7)

For gases that are non-flammable and may become corrosive or react dangerously with water, moisture control is to be provided to ensure that cargo tanks are dry before loading and that, during discharge, dry air or cargo vapour is introduced to prevent negative pressures. For the purposes of this paragraph, dry air is air that has a dew point of −45 °C or below at atmospheric pressure.

1708. Inhibition (IGC Code 17.8)

1. Care is to be taken to ensure that the cargo is sufficiently inhibited to prevent self-reaction (e.g. polymerization or dimerization) at all times during the voyage. Ships are to be provided with a certificate from the manufacturer stating:
   (1) name and amount of inhibitor added;
   (2) date inhibitor was added and the normally expected duration of its effectiveness;
   (3) any temperature limitations affecting the inhibitor; and
   (4) the action to be taken should the length of the voyage exceed the effective lifetime of the inhibitors.

1709. Flame screens on vent outlets (IGC Code 17.9)

When carrying a cargo referenced to this Article, cargo tank vent outlets are to be provided with readily renewable and effective flame screens or safety heads of an approved type. Due attention is to be paid in the design of flame screens and vent heads, to the possibility of the blockage of these devices by the freezing of cargo vapour or by icing up in adverse weather conditions. Flame screens are to be removed and replaced by protection screens, in accordance with **802. 15**, when carrying cargoes not referenced to this Article.

1710. Maximum allowable quantity of cargo per tank (IGC Code 17.10)

When carrying a cargo referenced to this Article, the quantity of the cargo is not to exceed 3,000 m^3 in any one tank.

1711. Cargo pumps and discharge arrangements (IGC Code 17.11)

1. The vapour space of cargo tanks equipped with submerged electric motor pumps is to be inerted to a positive pressure prior to loading, during carriage and during unloading of flammable liquids.

2. The cargo is to be discharged only by deepwell pumps or by hydraulically operated submerged pumps. These pumps are to be of a type designed to avoid liquid pressure against the shaft gland.

3. Inert gas displacement may be used for discharging cargo from type C independent tanks, provided the cargo system is designed for the expected pressure.

1712. Ammonia (IGC Code 17.12)

1. Anhydrous ammonia may cause stress corrosion cracking in containment and process systems made of carbon-manganese steel or nickel steel. To minimize the risk of this occurring, measures detailed in **2** to **8** is to be taken, as appropriate.

2. Where carbon-manganese steel is used, cargo tanks, process pressure vessels and cargo piping are to be made of fine-grained steel with a specified minimum yield strength not exceeding 355 N/mm^2, and with an actual yield strength not exceeding 440 N/mm^2. One of the following constructional or operational measures is also to be taken:

(1) lower strength material with a specified minimum tensile strength not exceeding 410 N/mm^2 is to be used or
(2) cargo tanks, etc., are to be post-weld stress relief heat treated or
(3) carriage temperature is to be maintained, preferably at a temperature close to the product's boiling point of −33 °C, but in no case at a temperature above −20 °C or
(4) the ammonia is to contain not less than 0.1 % w/w water, and the master is to be provided with documentation confirming this.

3. If carbon-manganese steels with higher yield properties are used other than those specified in **2**, the completed cargo tanks, piping, etc., are to be given a post-weld stress relief heat treatment.

4. Process pressure vessels and piping of the condensate part of the refrigeration system are to be given a post-weld stress relief heat treatment when made of materials mentioned in **1**.

5. The tensile and yield properties of the welding consumables are to exceed those of the tank or piping material by the smallest practical amount.

6. Nickel steel containing more than 5 % nickel and carbon-manganese steel, not complying with the requirements of **2** and **3**, are particularly susceptible to ammonia stress corrosion cracking and are not to be used in containment and piping systems for the carriage of this product.

7. Nickel steel containing not more than 5 % nickel may be used, provided the carriage temperature complies with the requirements specified in **2** (3).

8. To minimize the risk of ammonia stress corrosion cracking, it is advisable to keep the dissolved oxygen content below 2.5 ppm w/w. This can best be achieved by reducing the average oxygen content in the tanks prior to the introduction of liquid ammonia to less than the values given as a function of the carriage temperature T in the table below:

Table 7.5.11

T (°C)	O_2 (%, v/v)
−30 and below	0.90
−20	0.50
−10	0.28
0	0.16
10	0.10
20	0.05
30	0.03

Oxygen percentages for intermediate temperatures may be obtained by direct interpolation.

1713. Chlorine (IGC Code 17.13)

1. Cargo containment system

(1) The capacity of each tank is not to exceed 600 m^3 and the total capacity of all cargo tanks are not to exceed 1,200 m^3.
(2) The tank design vapour pressure is not to be less than 1.35 MPa (see **701. 2** and **1703. 2**).
(3) Parts of tanks protruding above the upper deck are to be provided with protection against thermal radiation, taking into account total engulfment by fire.

(4) Each tank is to be provided with two PRVs. A bursting disc of appropriate material is to be installed between the tank and the PRVs. The rupture pressure of the bursting disc is to be 0.1 MPa lower than the opening pressure of the pressure relief valve, which is to be set at the design vapour pressure of the tank but not less than 1.35 MPa gauge. The space between the bursting disc and the relief valve is to be connected through an excess flow valve to a pressure gauge and a gas detection system. Provisions are to be made to keep this space at or near the atmospheric pressure during normal operation.

(5) Outlets from PRVs are to be arranged in such a way as to minimize the hazards on board the ship as well as to the environment. Leakage from the relief valves is to be led through the absorption plant to reduce the gas concentration as far as possible. The relief valve exhaust line is to be arranged at the forward end of the ship to discharge outboard at deck level with an arrangement to select either port or starboard side, with a mechanical interlock to ensure that one line is always open.

(6) The Society and the port Administration may require that chlorine is carried in a refrigerated state at a specified maximum pressure.

2. Cargo piping systems

(1) Cargo discharge is to be performed by means of compressed chlorine vapour from shore, dry air or another acceptable gas, or fully submerged pumps. Cargo discharge compressors on board ships are not to be used for this. The pressure in the vapour space of the tank during discharging is not to exceed 1.05 MPa gauge.

(2) The design pressure of the cargo piping system is to be not less than 2.1 MPa gauge. The internal diameter of the cargo pipes is not to exceed 100 mm. Only pipe bends are to be accepted for compensation of pipeline thermal movement. The use of flanged joints is to be restricted to a minimum and, when used, the flanges are to be of the welding neck type with tongue and groove.

(3) Relief valves of the cargo piping system are to discharge to the absorption plant, and the flow restriction created by this unit is to be taken into account when designing the relief valve system (see **802. 18**).

3. Materials

(1) The cargo tanks and cargo piping systems are to be made of steel suitable for the cargo and for a temperature of −40 °C, even if a higher transport temperature is intended to be used.

(2) The tanks are to be thermally stress relieved. Mechanical stress relief is not to be accepted as an equivalent.

4. Instrumentation-safety devices

(1) The ship is to be provided with a chlorine absorbing plant with connections to the cargo piping system and the cargo tanks. The absorbing plant is to be capable of neutralizing at least 2 % of the total cargo capacity at a reasonable absorption rate.

(2) During the gas-freeing of cargo tanks, vapours are not to be discharged to the atmosphere.

(3) A gas detecting system shall be provided that is capable of monitoring chlorine concentrations of at least 1 ppm by volume. Sample points should be located:

(A) near the bottom of the hold spaces

(B) in the pipes from the safety relief valves

(C) at the outlet from the gas absorbing plant

(D) at the inlet to the ventilation systems for the accommodation, service and machinery spaces and control stations

(E) on deck - at the forward end, midships and after end of the cargo area. This is only required to be used during cargo handling and gas-freeing operations.

The gas detection system is to be provided with an audible and visual alarm with a set point of 5 ppm.

(4) Each cargo tank is to be fitted with a high pressure alarm giving an audible alarm at a pressure equal to 1.05 MPa gauge.

5. Personnel protection

The enclosed space required by **1705. 5** is to meet the following requirements:

(1) the space is to be easily and quickly accessible from the weather decks and from accommodation spaces by means of air locks, and is to be capable of being rapidly closed gastight;

(2) one of the decontamination showers required by **1404. 3** is to be located near the weather deck airlock to the space;

(3) the space is to be designed to accommodate the entire crew of the ship and be provided with a source of uncontaminated air for a period of not less than 4 h; and
(4) one set of oxygen therapy equipment is to be carried in the space.

6. Filling limits for cargo tanks

(1) The requirements of **1501. 3** (2) do not apply when it is intended to carry chlorine.
(2) The chlorine content of the gas in the vapour space of the cargo tank after loading is to be greater than 80 % by volume.

1714. Ethylene oxide (IGC Code 17.14)

1. For the carriage of ethylene oxide, the requirements of **1718.** are to apply, with the additions and modifications as given in this Article.

2. Deck tanks are not to be used for the carriage of ethylene oxide.

3. Stainless steels types 416 and 442, as well as cast iron, are not to be used in ethylene oxide cargo containment and piping systems.

4. Before loading, tanks are to be thoroughly and effectively cleaned to remove all traces of previous cargoes from tanks and associated pipework, except where the immediate prior cargo has been ethylene oxide, propylene oxide or mixtures of these products. Particular care is to be taken in the case of ammonia in tanks made of steel other than stainless steel.

5. Ethylene oxide is to be discharged only by deepwell pumps or inert gas displacement. The arrangement of pumps is to comply with **1718. 15**.

6. Ethylene oxide is to be carried refrigerated only and maintained at temperatures of less than 30 °C.

7. PRVs are to be set at a pressure of not less than 0.55 MPa gauge. The maximum set pressure is to be specially approved by the Society.

8. The protective padding of nitrogen gas, as required by **1718. 27**, is to be such that the nitrogen concentration in the vapour space of the cargo tank will, at no time, be less than 45 % by volume.

9. Before loading, and at all times when the cargo tank contains ethylene oxide liquid or vapour, the cargo tank is to be inerted with nitrogen.

10. The water-spray system required by **1718. 29** and that required by **1103.** is to operate automatically in a fire involving the cargo containment system.

11. A jettisoning arrangement is to be provided to allow the emergency discharge of ethylene oxide in the event of uncontrollable self-reaction.

1715. Separate piping systems (IGC Code 17.15)

1. Separate piping systems, as defined in **105. 45**, are to be provided.

1716. Methyl acetylene-propadiene mixtures (IGC Code 17.16)

1. Methyl acetylene-propadiene mixtures are to be suitably stabilized for transport. Additionally, upper limits of temperatures and pressure during the refrigeration are to be specified for the mixtures.

2. Examples of acceptable stabilized compositions are:

(1) Composition 1:
(A) maximum methyl acetylene to propadiene molar ratio of 3 to 1
(B) maximum combined concentration of methyl acetylene and propadiene of 65 mol %
(C) minimum combined concentration of propane, butane, and isobutane of 24 mol %, of which at least one third (on a molar basis) is to be butanes and one third propane
(D) maximum combined concentration of propylene and butadiene of 10 mol %;
(2) Composition 2:
(A) maximum methyl acetylene and propadiene combined concentration of 30 mol %
(B) maximum methyl acetylene concentration of 20 mol %
(C) maximum propadiene concentration of 20 mol %

(D) maximum propylene concentration of 45 mol %
(E) maximum butadiene and butylenes combined concentration of 2 mol %
(F) minimum saturated C_4 hydrocarbon concentration of 4 mol % and
(G) minimum propane concentration of 25 mol %.

3. Other compositions may be accepted, provided the stability of the mixture is demonstrated to the satisfaction of the Society.

4. If a ship has a direct vapour compression refrigeration system, this is to comply with the following requirements, subject to pressure and temperature limitations depending on the composition. For the example compositions given in **2**, the following features are to be provided:

(1) a vapour compressor that does not raise the temperature and pressure of the vapour above 60 °C and 1.75 MPa gauge during its operation, and that does not allow vapour to stagnate in the compressor while it continues to run
(2) discharge piping from each compressor stage or each cylinder in the same stage of a reciprocating compressor is to have
(A) two temperature-actuated shutdown switches set to operate at 60 °C or less
(B) a pressure-actuated shutdown switch set to operate at 1.75 MPa gauge or less and
(C) a safety relief valve set to relieve at 1.8 MPa gauge or less
(3) the relief valve required by (2) (C) is to vent to a mast meeting the requirements of **802. 10**, **11** and **15** and is not to relieve into the compressor suction line and
(4) an alarm that sounds in the cargo control position and in the navigation bridge when a high-pressure switch, or a high-temperature switch, operates.

5. The piping system, including the cargo refrigeration system, for tanks to be loaded with methyl acetylene-propadiene mixtures is to be either independent (as defined in **105. 26**) or separate (as defined in **105. 45**) from piping and refrigeration systems for other tanks. This segregation is to apply to all liquid and vapour vent lines and any other possible connections, such as common inert gas supply lines.

1717. Nitrogen (IGC Code 17.17)

Materials of construction and ancillary equipment such as insulation are to be resistant to the effects of high oxygen concentrations caused by condensation and enrichment at the low temperatures attained in parts of the cargo system. Due consideration is to be given to ventilation in areas where condensation might occur, to avoid the stratification of oxygen-enriched atmosphere.

1718. Propylene oxide and mixtures of ethylene oxide-propylene oxide with ethylene oxide content of not more than 30% by weight (IGC Code 17.18)

1. Products transported under the provisions of this Article are to be acetylene-free.

2. Unless cargo tanks are properly cleaned, these products are not to be carried in tanks that have contained as one of the three previous cargoes any product known to catalyse polymerization, such as:

(1) anhydrous ammonia and ammonia solutions
(2) amines and amine solutions and
(3) oxidizing substances (e.g. chlorine).

3. Before loading, tanks are to be thoroughly and effectively cleaned to remove all traces of previous cargoes from tanks and associated pipework, except where the immediate prior cargo has been propylene oxide or ethylene oxide-propylene oxide mixtures. Particular care is to be taken in the case of ammonia in tanks made of steel other than stainless steel.

4. In all cases, the effectiveness of cleaning procedures for tanks and associated pipework is to be checked, by suitable testing or inspection, to ascertain that no traces of acidic or alkaline materials remain that might create a hazardous situation in the presence of these products.

5. Tanks are to be entered and inspected prior to each initial loading of these products to ensure freedom from contamination, heavy rust deposits and any visible structural defects. When cargo tanks are in continuous service for these products, such inspections are to be performed at intervals of not more than two years.

6. Tanks for the carriage of these products are to be of steel or stainless steel construction.

7. Tanks that have contained these products may be used for other cargoes after thorough cleaning of tanks and associated pipework systems by washing or purging.

8. All valves, flanges, fittings and accessory equipment are to be of a type suitable for use with these products and are to be constructed of steel or stainless steel in accordance with recognized standards. Disc or disc faces, seats and other wearing parts of valves are to be made of stainless steel containing not less than 11% chromium.

9. Gaskets are to be constructed of materials which do not react with, dissolve in, or lower the auto-ignition temperature of, these products and which are fire-resistant and possess adequate mechanical behaviour. The surface presented to the cargo is to be polytetrafluoroethylene (PTFE) or materials giving a similar degree of safety by their inertness. Spirally-wound stainless steel with a filler of PTFE or similar fluorinated polymer may be accepted, if approved by the Society.

10. Insulation and packing, if used, are to be of a material which does not react with, dissolve in, or lower the auto-ignition temperature of, these products. **【See Guidance】**

11. The following materials are generally found unsatisfactory for use in gaskets, packing and similar uses in containment systems for these products and would require testing before being approved:

(1) neoprene or natural rubber, if it comes into contact with the products
(2) asbestos or binders used with asbestos and
(3) materials containing oxides of magnesium, such as mineral wools.

12. Filling and discharge piping are to extend to within 100 mm of the bottom of the tank or any sump.

13. The products are to be loaded and discharged in such a manner that venting of the tanks to atmosphere does not occur. If vapour return to shore is used during tank loading, the vapour return system connected to a containment system for the product is to be independent of all other containment systems.

14. During discharging operations, the pressure in the cargo tank is to be maintained above 0.007 MPa gauge.

15. The cargo is to be discharged only by deepwell pumps, hydraulically operated submerged pumps or inert gas displacement. Each cargo pump is to be arranged to ensure that the product does not heat significantly if the discharge line from the pump is shut off or otherwise blocked.

16. Tanks carrying these products are to be vented independently of tanks carrying other products. Facilities are to be provided for sampling the tank contents without opening the tank to atmosphere.

17. Cargo hoses used for transfer of these products are to be marked "FOR ALKYLENE OXIDE TRANSFER ONLY".

18. Hold spaces are to be monitored for these products. Hold spaces surrounding type A and type B independent tanks are also to be inerted and monitored for oxygen. The oxygen content of these spaces is to be maintained below 2 % by volume. Portable sampling equipment is satisfactory.

19. Prior to disconnecting shore lines, the pressure in liquid and vapour lines is to be relieved through suitable valves installed at the loading header. Liquid and vapour from these lines are not to be discharged to atmosphere.

20. Tanks are to be designed for the maximum pressure expected to be encountered during loading, carriage or unloading of cargo.

21. Tanks for the carriage of propylene oxide with a design vapour pressure of less than 0.06 MPa, and tanks for the carriage of ethylene oxide-propylene oxide mixtures with a design vapour pressure of less than 0.12 MPa, are to have a cooling system to maintain the cargo below the reference temperature. The reference temperatures are referred to in **1501. 3**.

22. Pressure relief valve settings are not to be less than 0.02 MPa gauge; and for type C independent tanks not greater than 0.7 MPa gauge for the carriage of propylene oxide and not greater than 0.53 MPa gauge for the carriage of ethylene oxide-propylene oxide mixtures.

23. The piping system for tanks to be loaded with these products is to be completely separate from piping systems for all other tanks, including empty tanks, and from all cargo compressors. If the

piping system for the tanks to be loaded with these products is not independent, as defined in **105. 26**, the required piping separation is to be accomplished by the removal of spool pieces, valves, or other pipe sections and the installation of blank flanges at these locations. The required separation applies to all liquid and vapour piping, liquid and vapour vent lines and any other possible connections such as common inert gas supply lines.

24. The products are to be transported only in accordance with cargo handling plans approved by the Society. Each intended loading arrangement is to be shown on a separate cargo handling plan. Cargo handling plans are to show the entire cargo piping system and the locations for installation of the blank flanges needed to meet the above piping separation requirements. A copy of each approved cargo handling plan is to be kept on board the ship. The International Certificate of Fitness for the Carriage of Liquefied Gases in Bulk is to be endorsed to include references to the approved cargo handling plans.

25. Before each initial loading of these products, and before every subsequent return to such service, certification verifying that the required piping separation has been achieved is to be obtained from a responsible person acceptable to the port Administration and carried on board the ship. Each connection between a blank flange and pipeline flange is to be fitted with a wire and seal by the responsible person to ensure that inadvertent removal of the blank flange is impossible.

26. The maximum allowable loading limits for each tank is to be indicated for each loading temperature that may be applied, in accordance with **1505**.

27. The cargo is to be carried under a suitable protective padding of nitrogen gas. An automatic nitrogen make-up system is to be installed to prevent the tank pressure falling below 0.007 MPa gauge in the event of product temperature fall due to ambient conditions or malfunctioning of refrigeration system. Sufficient nitrogen is to be available on board to satisfy the demand of the automatic pressure control. Nitrogen of commercially pure quality (99.9 % by volume) is to be used for padding. A battery of nitrogen bottles, connected to the cargo tanks through a pressure reduction valve, satisfies the intention of the expression "automatic" in this context. **【See Guidance】**

28. The cargo tank vapour space is to be tested prior to and after loading to ensure that the oxygen content is 2 % by volume or less.

29. A water-spray system of sufficient capacity is to be provided to blanket effectively the area surrounding the loading manifold, the exposed deck piping associated with product handling and the tank domes. The arrangement of piping and nozzles is to be such as to give a uniform distribution rate of $10\,l/m^2/min$. The arrangement is to ensure that any spilled cargo is washed away.

30. The water-spray system is to be capable of local and remote manual operation in case of a fire involving the cargo containment system. Remote manual operation is to be arranged such that the remote starting of pumps supplying the water-spray system and remote operation of any normally closed valves in the system can be carried out from a suitable location outside the cargo area, adjacent to the accommodation spaces and readily accessible and operable in the event of fire in the areas protected.

31. When ambient temperatures permit, a pressurized water hose ready for immediate use is to be available during loading and unloading operations, in addition to the above water-spray requirements.

1719. Vinyl chloride (IGC Code 17.19)

In cases where polymerization of vinyl chloride is prevented by addition of an inhibitor, **1708.** is applicable. In cases where no inhibitor has been added, or the inhibitor concentration is insufficient, any inert gas used for the purposes of **1706.** is to contain no more oxygen than 0.1% by volume. Before loading is started, inert gas samples from the tanks and piping are tol be analysed. When vinyl chloride is carried, a positive pressure is always to be maintained in the tanks and during ballast voyages between successive carriages.

1720. Mixed C4 cargoes (IGC Code 17.20)

1. Cargoes that may be carried individually under the requirements of this Chapter, notably butane, butylenes and butadiene, may be carried as mixtures subject to the provisions of this Article. These cargoes may variously be referred to as "Crude C4", "Crude butadiene", "Crude steam-cracked C4",

"Spent steam-cracked C4", "C4 stream", "C4 raffinate", or may be shipped under a different description. In all cases, the material safety data sheets (MSDS) are to be consulted as the butadiene content of the mixture is of prime concern as it is potentially toxic and reactive. While it is recognized that butadiene has a relatively low vapour pressure, if such mixtures contain butadiene they are to be regarded as toxic and the appropriate precautions applied.

2. If the mixed C4 cargo shipped under the terms of this Article contains more than 50 % (mole) of butadiene, the inhibitor precautions in **1708.** are to apply.

3. Unless specific data on liquid expansion coefficients is given for the specific mixture loaded, the filling limit restrictions of **Sec 15** are to be calculated as if the cargo contained 100 % concentration of the component with the highest expansion ratio.

1721. Carbon dioxide: high purity (IGC Code 17.21)

1. Uncontrolled pressure loss from the cargo can cause "sublimation" and the cargo will change from the liquid to the solid state. The precise "triple point" temperature of a particular carbon dioxide cargo is to be supplied before loading the cargo, and will depend on the purity of that cargo, and this is to be taken into account when cargo instrumentation is adjusted. The set pressure for the alarms and automatic actions described in this Article is to be set to at least 0.05 MPa above the triple point for the specific cargo being carried. The "triple point" for pure carbon dioxide occurs at 0.5 MPa gauge and −54.4 °C.

2. There is a potential for the cargo to solidify in the event that a cargo tank relief valve, fitted in accordance with **802**, fails in the open position. To avoid this, a means of isolating the cargo tank safety valves is to be provided and the requirements of **802. 9** (2) do not apply when carrying this carbon dioxide. Discharge piping from safety relief valves is to be designed so they remain free from obstructions that could cause clogging. Protective screens are not to be fitted to the outlets of relief valve discharge piping, so the requirements of **802. 15** do not apply.

3. Discharge piping from safety relief valves are not required to comply with **802. 10**, but are to be designed so they remain free from obstructions that could cause clogging. Protective screens are not to be fitted to the outlets of relief valve discharge piping, so the requirements of **802. 15** do not apply.

4. Cargo tanks are to be continuously monitored for low pressure when a carbon dioxide cargo is carried. An audible and visual alarm is to be given at the cargo control position and on the bridge. If the cargo tank pressure continues to fall to within 0.05 MPa of the "triple point" for the particular cargo, the monitoring system is to automatically close all cargo manifold liquid and vapour valves and stop all cargo compressors and cargo pumps. The emergency shutdown system required by **1810.** may be used for this purpose.

5. All materials used in cargo tanks and cargo piping system are to be suitable for the lowest temperature that may occur in service, which is defined as the saturation temperature of the carbon dioxide cargo at the set pressure of the automatic safety system described in **1**.

6. Cargo hold spaces, cargo compressor rooms and other enclosed spaces where carbon dioxide could accumulate are to be fitted with continuous monitoring for carbon dioxide build-up. This fixed gas detection system replaces the requirements of **1306**, and hold spaces are to be monitored permanently even if the ship has type C cargo containment.

1722. Carbon dioxide: reclaimed quality (IGC Code 17.22)

1. The requirements of **1721.** also apply to this cargo. In addition, the materials of construction used in the cargo system are also to take account of the possibility of corrosion, in case the reclaimed quality carbon dioxide cargo contains impurities such as water, sulphur dioxide, etc., which can cause acidic corrosion or other problems.

Section 18 Operating Requirements

1801. General (IGC Code 18.1)

1. Those involved in liquefied gas carrier operations are to be made aware of the special requirements associated with, and precautions necessary for, their safe operation.

2. A copy of this Chapter, or national regulations incorporating the provisions of this Chapter, is to be on board every ship covered by this Chapter.

1802. Cargo operations manuals (IGC Code 18.2)

1. The ship is to be provided with copies of suitably detailed cargo system operation manuals approved by the Society such that trained personnel can safely operate the ship with due regard to the hazards and properties of the cargoes that are permitted to be carried.

2. The content of the manuals is to include, but not be limited to:

(1) overall operation of the ship from dry-dock to dry-dock, including procedures for cargo tank cooldown and warm-up, transfer (including ship-to-ship transfer), cargo sampling, gas-freeing, ballasting, tank cleaning and changing cargoes
(2) cargo temperature and pressure control systems
(3) cargo system limitations, including minimum temperatures (cargo system and inner hull), maximum pressures, transfer rates, filling limits and sloshing limitations
(4) nitrogen and inert gas systems
(5) firefighting procedures: operation and maintenance of firefighting systems and use of extinguishing agents
(6) special equipment needed for the safe handling of the particular cargo
(7) fixed and portable gas detection
(8) control, alarm and safety systems
(9) emergency shutdown systems
(10) procedures to change cargo tank pressure relief valve set pressures in accordance with **802. 8** and **413. 2** (3) and
(11) emergency procedures, including cargo tank relief valve isolation, single tank gas-freeing and entry and emergency ship-to-ship transfer operations.

1803. Cargo information (IGC Code 18.3)

1. Information is to be on board and available to all concerned in the form of a cargo information data sheet(s) giving the necessary data for the safe carriage of cargo. Such information is to include, for each product carried:

(1) a full description of the physical and chemical properties necessary for the safe carriage and containment of the cargo
(2) reactivity with other cargoes that are capable of being carried on board in accordance with the International Certificate of Fitness for the Carriage of Liquefied Gases in Bulk
(3) the actions to be taken in the event of cargo spills or leaks
(4) countermeasures against accidental personal contact
(5) firefighting procedures and firefighting media
(6) special equipment needed for the safe handling of the particular cargo and
(7) emergency procedures.

2. The physical data supplied to the master, in accordance with **1**, is to include information regarding the relative cargo density at various temperatures to enable the calculation of cargo tank filling limits in accordance with the requirements of **Sec 15**.

3. Contingency plans in accordance with **1** (3), for spillage of cargo carried at ambient temperature, are to take account of potential local temperature reduction such as when the escaped cargo has reduced to atmospheric pressure and the potential effect of this cooling on hull steel.

1804. Suitability for carriage (IGC Code 18.4)

1. The master is to ascertain that the quantity and characteristics of each product to be loaded are within the limits indicated in the International Certificate of Fitness for the Carriage of Liquefied Gases in Bulk and in the Loading and Stability Information booklet required by **202. 5**, and that products are listed in the International Certificate of Fitness for the Carriage of Liquefied Gases in Bulk as required under **Sec 4** of the certificate.

2. Care is to be taken to avoid dangerous chemical reactions if cargoes are mixed. This is of particular significance in respect of:
   (1) tank cleaning procedures required between successive cargoes in the same tank; and
   (2) simultaneous carriage of cargoes that react when mixed. This isto be permitted only if the complete cargo systems including, but not limited to, cargo pipework, tanks, vent systems and refrigeration systems are separated as defined in **105. 45**.

3. Where products are required to be inhibited, the certificate required by **1708.** is to be supplied before departure, otherwise the cargo is not to be transported.

1805. Carriage of cargo at low temperature (IGC Code 18.5)

1. When carrying cargoes at low temperatures:
   (1) the cooldown procedure laid down for that particular tank, piping and ancillary equipment is to be followed closely
   (2) loading is to be carried out in such a manner as to ensure that design temperature gradients are not exceeded in any cargo tank, piping or other ancillary equipment and
   (3) if provided, the heating arrangements associated with the cargo containment systems are to be operated in such a manner as to ensure that the temperature of the hull structure does not fall below that for which the material is designed.

1806. Cargo transfer operations (IGC Code 18.6)

1. A pre-cargo operations meeting is to take place between ship personnel and the persons responsible at the transfer facility. Information exchanged is to include the details of the intended cargo transfer operations and emergency procedures. A recognized industry checklist is to be completed for the intended cargo transfer and effective communications are to be maintained throughout the operation.

2. Essential cargo handling controls and alarms are to be checked and tested prior to cargo transfer operations.

1807. Personnel training (IGC Code 18.7)

1. Personnel is to be adequately trained in the operational and safety aspects of liquefied gas carriers as required by the International Convention on Standards of Training, Certification and Watchkeeping for Seafarers, 1978, as amended, the International Safety Management Code and the Medical First Aid Guide (MFAG). As a minimum:
   (1) all personnel is to be adequately trained in the use of protective equipment provided on board and have basic training in the procedures, appropriate to their duties, necessary under emergency conditions and
   (2) officers are to be trained in emergency procedures to deal with conditions of leakage, spillage or fire involving the cargo and a sufficient number of them are to be instructed and trained in essential first aid for the cargoes carried.

1808. Entry into enclosed spaces (IGC Code 18.8)

1. Under normal operational circumstances, personnel is not to enter cargo tanks, hold spaces, void spaces or other enclosed spaces where gas may accumulate, unless the gas content of the atmosphere in such space is determined by means of fixed or portable equipment to ensure oxygen sufficiency and the absence of toxic atmosphere.(See, **IMO Res. A. 1050(27)**)

2. If it is necessary to gas-free and aerate a hold space surrounding a type A cargo tank for routine

inspection, and flammable cargo is carried in the cargo tank, the inspection is to be conducted when the tank contains only the minimum amount of cargo "heel" to keep the cargo tank cold. The hold is to be re-inerted as soon as the inspection is completed.

3. Personnel entering any space designated as a hazardous area on a ship carrying flammable products is not to introduce any potential source of ignition into the space, unless it has been certified gas-free and is maintained in that condition.

1809. Cargo sampling (IGC Code 18.9)

1. Any cargo sampling is to be conducted under the supervision of an officer who is to ensure that protective clothing appropriate to the hazards of the cargo is used by everyone involved in the operation.
2. When taking liquid cargo samples, the officer is to ensure that the sampling equipment is suitable for the temperatures and pressures involved, including cargo pump discharge pressure, if relevant.
3. The officer is to ensure that any cargo sample equipment used is connected properly to avoid any cargo leakage.
4. If the cargo to be sampled is a toxic product, the officer is to ensure that a "closed loop" sampling system as defined in **105. 14** is used to minimize any cargo release to atmosphere.
5. After sampling operations are completed, the officer is to ensure that any sample valves used are closed properly and the connections used are correctly blanked.

1810. Cargo emergency shutdown (ESD) system (IGC Code 18.10)

1. General

(1) A cargo emergency shutdown system is to be fitted to stop cargo flow in the event of an emergency, either internally within the ship, or during cargo transfer to ship or shore. The design of the ESD system is to avoid the potential generation of surge pressures within cargo transfer pipe work (see **1810. 2** (1) (D)).

(2) Auxiliary systems for conditioning the cargo that use toxic or flammable liquids or vapours are to be treated as cargo systems for the purposes of ESD. Indirect refrigeration systems using an inert medium, such as nitrogen, need not be included in the ESD function.

(3) The ESD system is to be activated by the manual and automatic initiations listed in **Table 7.5.12**. Any additional initiations are only to be included in the ESD system if it can be shown that their inclusion does not reduce the integrity and reliability of the system overall.

(4) Ship's ESD systems are to incorporate a ship-shore link in accordance with recognized standards(eg., ISO 28460).

(5) A functional flow chart of the ESD system and related systems is to be provided in the cargo control station and on the navigation bridge.

2. ESD valve requirements 【See Guidance】

(1) General

(A) The term ESD valve means any valve operated by the ESD system.

(B) ESD valves are to be remotely operated, be of the fail-closed type (closed on loss of actuating power), be capable of local manual closure and have positive indication of the actual valve position. As an alternative to the local manual closing of the ESD valve, a manually operated shut-off valve in series with the ESD valve is to be permitted. The manual valve is to be located adjacent to the ESD valve. Provisions are to be made to handle trapped liquid should the ESD valve close while the manual valve is also closed.

(C) ESD valves in liquid piping systems are to close fully and smoothly within 30 s of actuation. Information about the closure time of the valves and their operating characteristics is to be available on board, and the closing time is to be verifiable and repeatable.

(D) The closing time of the valve referred to in **1303. 1** to **3** (i.e. time from shutdown signal initiation to complete valve closure) is not to be greater than:

$$\frac{3{,}600\,U}{LR} \quad \text{(sec)}$$

where:

U : ullage volume at operating signal level (m^3)

LR: maximum loading rate agreed between ship and shore facility (m^3/h).

The loading rate is to be adjusted to limit surge pressure on valve closure to an acceptable level, taking into account the loading hose or arm, the ship and the shore piping systems, where relevant.

(2) Ship-shore and ship-ship manifold connections

One ESD valve is to be provided at each manifold connection. Cargo manifold connections not being used for transfer operations are to be blanked with blank flanges rated for the design pressure of the pipeline system.

(3) Cargo system valves

If cargo system valves as defined in **505.** are also ESD valves within the meaning of **1810.**, then the requirements of **1810.** are to apply.

3. ESD system controls

(1) As a minimum, the ESD system is to be capable of manual operation by a single control on the bridge and either in the control position required by **1301. 2** or the cargo control room, if installed, and no less than two locations in the cargo area.

(2) The ESD system is to be automatically activated on detection of a fire on the weather decks of the cargo area and/or cargo machinery spaces. As a minimum, the method of detection used on the weather decks is to cover the liquid and vapour domes of the cargo tanks, the cargo manifolds and areas where liquid piping is dismantled regularly. Detection may be by means of fusible elements designed to melt at temperatures between 98 °C and 104 °C, or by area fire detection methods.

(3) Cargo machinery that is running is to be stopped by activation of the ESD system in accordance with the cause and effect matrix in **Table 7.5.12**.

(4) The ESD control system is to be configured so as to enable the high-level testing required in **1303. 5** to be carried out in a safe and controlled manner. For the purpose of the testing, cargo pumps may be operated while the overflow control system is overridden. Procedures for level alarm testing and re-setting of the ESD system after completion of the high-level alarm testing are to be included in the operation manual required by **1802. 1**.

Table 7.5.12 ESD functional arrangements

	Pumps		Compressor systems				valves	Link
Shut down action → initiation ↓	Cargo pumps/ cargo booster pumps	Spray/ stripping pumps	Varpour return compressors	Fuel gas compressors	Reliquefaction plant*** including condensate return pumps, if fitted	Gas combustion unit	ESD valves	Signal to ships/ shore link****
Emergency push buttons (see **1810. 3.** (1))	√	√	√	Note 2	√	√	√	√
Fire detection on deck or in compressor house* (see **1810. 3.** (2))	√	√	√	√	√	√	√	√
High level in cargo tank (see **1303. 2** and 3)	√	√	√	Note 1 Note 2	Note 1 Note 3	Note 1	Note 6	√
Signal from ship/shore link (see **1810. 1.** (4))	√	√	√	Note 2	Note 3	n/a	√	n/a
Loss of motive power to ESD valves**	√	√	√	Note 2	Note 3	n/a	√	√
Main electric power failure ("black out")	Note 7	Note 7	Note 7	Note 7	Note 7	Note 7	√	√
Level alarm override (see **1303. 7**)	Note 4	Note 4 Note 5	√	Note 1	Note 1	Note 1	√	√

NOTE:

1. These items of equipment can be omitted from these specific automatic shutdown initiators, provided the equipment inlets are protected against cargo liquid ingress.
2. If the fuel gas compressor is used to return cargo vapour to shore, it is to be included in the ESD system when operating in this mode.
3. If the reliquefaction plant compressors are used for vapour return/shore line clearing, they are to be included in the ESD system when operating in that mode.
4. The override system permitted by **1303. 7** may be used at sea to prevent false alarms or shutdowns. When level alarms are overridden, operation of cargo pumps and the opening of manifold ESD valves is to be inhibited except when high-level alarm testing is carried out in accordance with 1303. 5 (see 1810. 3. (4)).
5. Cargo spray or stripping pumps used to supply forcing vaporizer may be excluded from the ESD system only when operating in that mode.
6. The sensors referred to in **1303. 2** may be used to close automatically the tank filling valve for the individual tank where the sensors are installed, as an alternative to closing the ESD valve referred to in 1810. 2. (2). If this option is adopted, activation of the full ESD system is to be initiated when the high-level sensors in all the tanks to be loaded have been activated.
7. These items of equipment are to be designed not to restart upon recovery of main electric power and without confirmation of safe conditions.

* Fusible plugs, electronic point temperature monitoring or area fire detection may be used for this purpose on deck.

** Failure of hydraulic, electric or pneumatic power for remotely operated ESD valve actuators.

*** Indirect refrigeration systems which form part of the reliquefaction plant do not need to be included in the ESD function if they employ an inert medium such as nitrogen in the refrigeration cycle.

**** Signal need not indicate the event initiating ESD.

√ Functional requirement.

N/A Not applicable.

4. Additional shutdowns

(1) The requirements of **803. 1** (1) to protect the cargo tank from external differential pressure may be fulfilled by using an independent low pressure trip to activate the ESD system, or, as minimum, to stop any cargo pumps or compressors.

(2) An input to the ESD system from the overflow control system required by **1303.** may be provided to stop any cargo pumps or compressors' running at the time a high level is detected, as this alarm may be due to inadvertent internal transfer of cargo from tank to tank.

5. Pre-operations testing

Cargo emergency shutdown and alarm systems involved in cargo transfer are to be checked and tested before cargo handling operations begin.

1811. Hot work on or near cargo containment systems (IGC Code 18.11)

1. Special fire precautions are to be taken in the vicinity of cargo tanks and, particularly, insulation systems that may be flammable or contaminated with hydrocarbons or that may give off toxic fumes as a product of combustion.

1812. Additional operating requirements (IGC Code 18.12)

Additional operating requirements will be found in the following paragraphs of this Chapter:
202. 2, 202. 5, 202. 8, 308. 4, 308. 5, 503. 2, 503. 3 (3), 507. 3, 701, 802. 7, 802. 8, 802. 9, 902, 903, 904. 4, 1201. 1, 1301. 3, 1303. 6, 1306. 18, 1403. 3, 1503, 1506, 1606. 3, 1704. 2, 1706, 1707, 1709, 1710, 1711, 1712, 1713, 1714, 1716, 1718, 1719, 1721, 1722.

Section 19 Summary of Minimum Requirements 【See Guidance】

Explanatory notes to the summary of minimum requirements

Table 7.5.13

Product name (column a)	The product name is to be used in the shipping document for any cargo offered for bulk shipments. Any additional name may be included in brackets after the product name. In some cases, the product names are not identical with the names given in previous issues of this Chapter.
(column b)	Deleted
Ship type (column c)	1 : Ship type 1G (**201. 2** (1)) 2 : Ship type 2G (**201. 2** (2)) 3 : Ship type 2PG (**201. 2** (3)) 4 : Ship type 3G (**201. 2** (4))
Independent tank type C required (column d)	Type C independent tank (**423**)
Tank environmental control (column e)	Inert : Inerting (**904**) Dry : Drying (**1707**) – : No special requirements under this Chapter
Vapour detection (column f)	F : Flammable vapour detection T : Toxic vapour detection F+T : Flammable and toxic vapour detection A : Asphixiant
Gauging (column g)	I : Indirect or closed (**1302. 3** (1) and (2)) R : Indirect, closed or restricted (**1302. 3** (1), (2), (3) and (4)) C : Indirect or closed (**1302. 3** (1), (2) and (3))
(column h)	Deleted
Special requirements (column i)	When specific reference is made to **Sec 14** and/or **17**, these requirements are to be additional to the requirements in any other column.
Refrigerant gases	Nontoxic and nonflammable gases

Unless otherwise specified, gas mixtures containing less than 5 % total acetylenes may be transported with no further requirements than those provided for the major components.

a	b	c	d	e	f	g	h	i
Product name		Ship type	Independent tank type C required	Control of vapour space within cargo tanks	Vapour detection	Gauging		Special requirements
Acetaldehyde		2 G/2 PG	–	Inert	F+T	C		1404.3, 403.3.(1), 1704.1, 1706.1
Ammonia, anhydrous		2 G/2 PG	–	–	T	C		1404, 1702.1, 1712
Butadiene (all isomers)		2 G/2 PG	–	–	F+T	C		1404, 1702.2, 1704.2, 1704.3, 1706, 1708
Butane (all isomers)		2 G/2 PG	–	–	F	R		
Butane–propane mixtures		2 G/2 PG	–	–	F	R		
Butylenes (all isomers)		2 G/2 PG	–	–	F	R		
Carbon dioxide (high purity)		3 G	–	–	A	R		1721
Carbon dioxide (Reclaimed quality)		3 G	–	–	A	R		1722
Chlorine		1 G	Yes	Dry	T	I		1404, 1703.2, 1704.1, 1705, 1707, 1709, 1713
Diethyl ether*		2G/2PG	–	Inert	F+T	C		1404.2, 1404.3, 1702.6, 1703.1, 1706.1, 1709, 1710, 1711.2, 1711.3
Dimethylamine		2 G/2 PG	–	–	F+T	C		1404, 1702.1
Dimethyl ether		2 G/2 PG	–	–	F+T	C		
Ethane		2 G	–	–	F	R		
Ethyl chloride		2 G/2 PG	–	–	F+T	C		
Ethylene		2 G	–	–	F	R		
Ethylene oxide		1 G	Yes	Inert	F+T	C		1404, 1702.2, 1703.2, 1704.1, 1705, 1706.1, 1714
Ethyene oxide–propylene oxide mixtures with ethylene oxide content of not more than 30% by weight*		2 G/2 PG	–	Inert	F+T	C		1404.3, 1703.1, 1704.1, 1706.1, 1709, 1710, 1718
Isoprene*(all isomers)		2 G/2 PG	–	–	F	R		1404.3, 1708, 1709, 1711.1
Isoprene (part refined)*		2 G/2 PG	–	–	F	R		1404.3, 1708, 1709, 1711.1
Isopropylamine*		2 G/2 PG	–	–	F+T	C		1404.2, 1404.3, 1702.4, 1709, 1710, 1711.1, 1715

a	b	c	d	e	f	g	h	i
Product name	UN number	Ship type	Independent tank type C required	Control of vapour space within cargo tanks	Vapour detection	Gauging	MFAG table No.	Special requirements
Methane (LNG)		2 G	–	–	F	C		
Methyl acetylene–propadiene mixtures		2 G/2 PG	–	–	F	R		1716
Methyl bromide		1 G	Yes	–	F+T	C		1404, 1702.3, 1703.2, 1704.1, 1705
Methyl chloride		2 G/2 PG	–	–	F+T	C		1702.3
Mixed C4 Cargoes		2 G/2 PG	–	–	F+T	C		1404, 1702.2, 1704.2, 1704.3, 1706, 1720
Monoethylamine*		2 G/2 PG	–	–	F+T	C		1404, 1702.1, 1703.1, 1709, 1710, 1711.1, 1715
Nitrogen		3 G	–	–	A	C		1717
Pentanes (all isomers)*		2 G/2 PG	–	–	F	R		1709, 1711
Pentene (all isomers)*		2 G/2 PG	–	–	F	R		1709, 1711.
Propane		2 G/2 PG	–	–	F	R		
Propylene		2 G/2 PG	–	–	F	R		
Propylene oxide*		2 G/2 PG	–	Inert	F+T	C		1404.3, 1703.1, 1704.1, 1706.1, 1709, 1710, 1718
Refrigerant gases		3 G	–	–	–	R		
Sulphur dioxide		1 G	Yes	Dry	T	C		1404, 1703.2, 1704.1, 1705, 1707
Vinyl chloride		2 G/2 PG	–	–	F+T	C		1404.2, 1404.3, 1702.2, 1702.3, 1703.1, 1706, 1719
Vinyl ethyl ether*		2 G/2 PG	–	Inert	F+T	C		1404.2, 1404.3, 1702.2, 1703.1, 1706.1, 1708, 1709, 1710, 1711.2, 1711.3
Vinylidene chloride*		2 G/2 PG	–	Inert	F+T	C		1404.2, 1404.3, 1702.5, 1706.1, 1708, 1709, 1710
* This cargo is covered also by the IBC Code.								

CHAPTER 6 SHIPS CARRYING DANGEROUS CHEMICALS IN BULK

Section 1 General

101. Application (IBC Code 1.1) 【See Guidance】

1. The requirements in this Chapter apply to ships constructed on or after 1 July 1986, unless expressly provided otherwise. The requirements are also to comply with the requirements of IMO Res. MSC. 4 (48), MSC. 176 (79) and its additional amendments. Ships constructed before 1 July 1986 are to comply with the requirements of IMO Res. A.212 (VII), MEPC. 144 (54) and its additional amendments.

2. The requirements in this Chapter apply to ships, including those of less than 500 gross tonnage, engaged in the carriage of bulk cargoes of dangerous chemicals or noxious liquid substances, other than petroleum or similar flammable products as follows:

(1) Products having significant fire hazards in excess of those of petroleum products and similar flammable products.
(2) Products having significant hazards in addition to or other than flammability.

3. Products that have been reviewed and determined not to present safety and pollution hazards to such an extent as to warrant the application of the Rules are found in **Sec 18.**

4. Liquids covered of this Chapter are those having a vapour pressure not exceeding 0.28 MPa absolute at a temperature of 37.8 ℃.

5. For the purpose of MARPOL 73/78, the requirements applies only to NLS tanker defined thereof, which are engaged in the carriage of Noxious Liquid Substances identified as such by an entry of X, Y or Z in column c of Sec 17.

6. For a product for carriage in bulk, but not listed in **Secs 17** or **18,** the Administration shall prescribe the preliminary suitable conditions for the carriage, having regard to the criteria for hazard evaluation of bulk chemicals. For the evaluation of the pollution hazard of such a product and assignment of its pollution category, the procedure specified in regulation 6.3 of Annex II of MARPOL 73/78 is to be followed.

7. The ship's hull, machinery and equipment not specified in this Chapter are generally to comply with the requirements in the relevant Chapters of these Rules.

8. The ships carrying flammable dangerous chemicals in bulk are also to be in compliance with the requirements in **Pt 7, Ch 1** and **Pt 8** unless otherwise required in this Chapter.

9. For ships to be classed for restricted service and ships not provided with propulsive machinery, the requirements may be modified as appropriate.

10. When it is intended to carry products covered by this Chapter and products covered by **Ch 5,** the ship shall comply with the requirements of both Chapters appropriate to the products carried, However, when a ship is designed and constructed for the carriage of the products listed exclusively in **Sec 17**, the requirements of this Chapter should take precedence.

102. Approval for plans

For classification survey during construction, the following plans and informations as may be necessary depending upon the products intended to be loaded, condition of cargo storage, construction of cargo containment system and other design conditions are to be submitted in triplicate before the work is commenced.

1. Plans and data for approval

(1) Manufacturing specifications for independent cargo tanks (including materials to be used, welding procedures and inspection and testing procedures for weld and cargo tanks).
(2) Details of cargo tank construction.
(3) Arrangements of cargo tank accessories (including details of fittings inside the tanks).

(4) Details of independent cargo tank supports, deck portions through which cargo tanks penetrate and their sealing devices when provided.
(5) Plans showing arrangement and the methods of attachment of the insulation together with the working procedure concerned.
(6) When the cargoes are required to be cooled, the plans and informations in accordance with **Ch 5, 102. 1** (1), (6), (7), (8) and (16) are to be submitted depending upon the cargo storage plan and the type of cargo tank construction.
(7) Cargo pump construction plan including list of materials to be used and their specifications.
(8) Piping arrangement in cargo tank area.
(9) Cargo tank ventilation arrangement.
(10) Ventilation plan of cargo pump rooms, cofferdams, double bottoms and others.
(11) Diagram of monitoring and measurement system for cargo level, cargo temperature and others and the detail construction of their equipment.
(12) Control system for cargo temperature.
(13) Details of environmental control system such as inerting, padding, drying or ventilation including the piping diagram and the construction of their equipment.
(14) Instruments for cargo vapour detection.
(15) Electrical wiring plans and a table of electrical equipment used in dangerous spaces.
(16) Arrangement of earth connections for cargo tanks, pipe lines, machinery and equipment, only when flammable cargoes are intended to be loaded.
(17) Plans showing dangerous spaces.
(18) Fire extinguishing system.

2. Plans and data for reference

(1) Lists showing chemical and physical properties and other special properties of the all cargoes intended to be loaded. Loading plans of the dangerous chemicals coming within the scope of this Chapter and other chemicals to be loaded simultaneously with these dangerous chemicals.
(2) Guide of reactivity hazard defined by reactivity with other chemicals, water or the chemical itself including polymerization and, where deemed necessary, with the heating or cooling media. The chemicals not intended to be loaded simultaneously with the dangerous chemicals coming within the scope of this Chapter may be excluded from these guides.
(3) Data of reactivity hazard between intended cargoes and coating or lining in cargo tanks and of piping and equipment that may come into contact with cargo liquid or vapour.
(4) Data of suitability of corrosion-resistance materials for the cargoes having corrosive properties.
(5) Strength calculation of each cargo tanks and, where deemed necessary, thermal stress calculation.
(6) Capacity calculation of heating system as required cargoes to be heated.
(7) Plans and documents in accordance with **Ch 5, 102. 2** (1), (6), (8) and (10) depending upon the cargo storage plan and the type of cargo tank construction when the cargoes require to be cooled.
(8) Arrangements of access manholes stipulated in 304. in cargo tank area and the guide for access through these manholes.
(9) Operation manual stipulated in **Sec 16.**
(10) Calculation for ship survival capability stipulated in **Sec 2.**
(11) Equipment for personnel protection.

103. Equivalents

The construction, equipment, etc., which do not fall under the provisions of this Chapter but is considered to be equivalent to those required in this Chapter will be accepted by the Society.

104. National regulations

For the construction and equipment of the ship, attention is to be paid to the requirements of national regulations of the country in which the ship is registered and/or of the port which the ship intends to visit.

105. Hazards (IBC Code 1.2)

Hazards of products covered by this Chapter include as follows :

1. Fire hazard, defined by flashpoint, explosive/flammability limits/range and autoignition temperature of the chemical.
2. Health hazard, defined by:
   (1) corrosive effects on the skin in the liquid state or
   (2) acute toxic effect, taking into account values of :
   LD_{50} (oral): a dose which is lethal to 50 % of the test subjects when administered orally
   LD_{50} (skin): a dose which is lethal to 50 % of the test subjects when administered to the skin
   LC_{50} (inhalation): the concentration which is lethal by inhalation to 50 % of the test subjects; or
   (3) Other health effects such as carcinogenicity and sensitization.
3. Reactivity hazard, defined by reactivity:
   (1) with water
   (2) with air
   (3) with other products or
   (4) of the product itself (e.g. polymerization)
4. Marine pollution hazard, as defined :
   (1) bioaccumulation
   (2) lack of ready biodegradibility
   (3) acute toxicity to aquatic organisms
   (4) chronic toxity to acquatic organisms
   (5) long term human health effect and
   (6) physical properties resulting in the product floating or sinking and so adversely affecting marine life.

106. Definitions (IBC Code 1.3)

The definitions of terms are to be as specified in the following and **Sec 4,** unless otherwise specified elsewhere.

1. **"Accommodation spaces"** are those spaces used for public spaces, corridors, lavatories, cabins, offices, hospitals, cinemas, games and hobbies rooms, barber shops, pantries containing no cooking appliances and similar spaces. **"Public spaces"** are those portions of the accommodation spaces which are used for halls, dining rooms, lounges and similar permanently enclosed spaces.
2. **"Administration"** means the Government of the State whose flag the ship is entitled to fly.
3. **"Anniversary date"** means the day and the month of each year, which will correspond to the date of expiry of the International Certificate of Fitness for the Carriage of Dangerous Chemicals in Bulk.
4. **"Boiling point"** is the temperature at which a product exhibits a vapour pressure equal to the atmospheric pressure.
5. **"Breadth (B)"** means the maximum breadth of the ship, measured amidships to the moulded line of the frame in a ship with a metal shell and to the outer surface of the hull in a ship with a shell of any other material. The breadth (B) should be measured in metres.
6. **"Cargo area"** is that part of the ship that contains cargo tanks, slop tanks, cargo pump rooms including pump rooms, cofferdams, ballast or void spaces adjacent to cargo tanks or slop tanks and also deck areas throughout the entire length and breadth of the part of the ship over the above-mentioned spaces. Where independent tanks are installed in hold spaces, cofferdams, ballast or void spaces at the after end of the aftermost hold space or at the forward end of the forward hold space are excluded from the cargo area. **【See Guidance】**
7. **"Cargo pump room"** is a space containing pumps and their accessories for the handling of products covered by this Chapter.
8. **"Cargo service spaces"** are spaces within the cargo area used for workshops, lockers and store-rooms of more than 2 m^2 in area, used for cargo handling equipment.
9. **"Cargo tank"** is the envelope designed to contain the cargo.
10. **"Chemical tanker"** is a cargo ship constructed or adapted and used for the carriage in bulk of any liquid product listed in **Sec 17.**

11. **"Cofferdam"** is the isolating space between two adjacent steel bulkheads or decks. This space may be a void space or a ballast space.

12. **"Control stations"** are those spaces in which ship's radio or main navigating equipment or the emergency source of power is located or where the fire-recording or fire-control equipment is centralized. This does not include special fire control equipment which can be most practically located in the cargo area.

13. **"Dangerous chemicals"** means any liquid chemicals designated as presenting a safety hazard, based on the safety criteria for assigning products to chapter 17.

14. **"Density"** is the ratio of the mass to the volume of a product, expressed in terms of kilograms per cubic meter. This applies to liquid, gases and vapours.

15 **"Explosive/flammability limits/range"** are the conditions defining the state of fuel-oxidant mixture at which application of an adequately strong external ignition source is only just capable of producing flammability in a given test apparatus.

16. **"Flash point"** is the temperature in degrees Celsius at which a product will give off enough flammable vapour to be ignited. Values given in this Chapter are "closed cup test" determined by an approved flash point apparatus.

17. **"Hold space"** is the space enclosed by the ship's structure in which an independent cargo tank is situated.

18. **"Independent"** means that a piping or venting system, for example, is in no way connected to another system and that there are no provisions available for the potential connection to other systems.

19. **"Length (L)"** means 96 % of the total length on a waterline at 85% of the least moulded depth measured from the top of the keel, or the length from the forside of the stem to the axis of the rudder stock on that waterline, if that be greater. In ships designed with a rake of keel, the waterline on which this length is measured should be parallel to the designed waterline. The length (L) should be measured in metres.

20. **"Machinery spaces of category A"** are those spaces and trunks to such spaces which contain:
    (1) internal combustion machinery used for main propulsion; or
    (2) internal combustion machinery used for purposes other than main propulsion where such machinery has in the aggregate a total power output of not less than 375 kW; or
    (3) any oil-fired boiler or oil fuel unit, or any oil-fired equipment other than boilers, such as inert gas generators, incinerators, etc.

21. **"Machinery spaces"** are all machinery spaces of category A and all other spaces containing propelling machinery, boilers, oil fuel units, steam and internal combustion engines, generators and major electrical machinery, oil filling stations, refrigerating, stabilizing, ventilation and air-conditioning machinery, and similar spaces, and trunks to such spaces.

22. **"MARPOL 73/78"** means the International Convention for the Prevention of Pollution from Ships, 1973, as modified by the Protocol of 1978 relating thereto, as amended.

23. **"Noxious liquid substance"** means any substance indicated in the pollution Category column of chapter 17 or 18, or the current MEPC.2/Circular or provisionally assessed under the provisions of regulation 6.3 of MARPOL Annex II as falling into category X, Y or Z.

24. **"Oil fuel unit"** is the equipment used for the preparation of oil fuel for delivery to an oil-fired boiler, or equipment used for the preparation for delivery of heated oil to an internal combustion engine, and includes any oil pressure pumps, filters and heaters dealing with oil al a pressure of more than 0.18 MPa gauge.

25. **"Organization"** is the International Maritime Organization (IMO).

26. **"Permeability"** of a space means the ratio of the volume within the space which is assumed to be occupied by water to the total volume of that space.

27 **"Port Administration"** means the appropriate authority of the country in the port of which the ship is loading or unloading.

28. **"Products"** is the collective term used to cover both Noxious Liquid Substances and Dangerous Chemicals

29. **"Pump room"** is a space, located in the cargo area, containing pumps and their accessories for the handling of ballast and oil fuel.

30. **"Recognized standards"** are applicable international or national standards acceptable to the Society or standards laid down and maintained by an organization which complies with the standards adopted by the Organization and which is recognized by the Society.

31. **"Reference temperature"** is the temperature at which the vapour pressure of the cargo corresponds to the set pressure of the pressure-relief valve.

32. **"Separate"** means that a cargo piping system or cargo vent system, for example, is not connected to another cargo piping or cargo vent system. **【See Guidance】**

33. **"Service spaces"** are those spaces used for galleys, pantries containing cooking appliances, lockers, mail and specie rooms, store-rooms, workshops other than those forming part of the machinery spaces and similar spaces and trunks to such spaces.

34. **" SOLAS "** means the International Convention for the Safety of Life at Sea, 1974.

35. **"Vapour pressure"** is the equilibrium pressure of the saturate vapour above the liquid expressed in bars absolute at a specified temperature.

36. **"Void space"** is an enclosed space in the cargo area external to a cargo tank, other than a hold space, ballast space, oil fuel tank, cargo pump room, pump room, or any space in normal use by personnel.

37. **Purging** means the introduction of inert gas into a tank which is already in an inert condition with the object of further reducing the oxygen content; and/or reducing the existing hydrocarbon or other flammable vapours content to a level below which combustion cannot be supported if air is subsequently introduced into the tank.

38. **Gas-freeing** means the process where a portable or fixed ventilation system is used to introduce fresh air into a tank in order to reduce the concentration of hazardous gases or vapours to a level safe for tank entry.

Section 2 Ship Survival Capability and Location of Cargo Tanks

201. General (IBC Code 2.1)

1. Ships subject to this Chapter should survive the normal effects of flooding following assumed hull damage caused by some external force. In addition, to safeguard the ship and the environment, the cargo tanks of certain types of ships should be protected from penetration in the case of minor damage to the ship resulting, for example, from contact with a jetty or tug, and given a measure of protection from damage in the case of collision or stranding, by locating them at specified minimum distances inboard from the ship's shell plating. Both the damage to be assumed and the proximity of the cargo tanks to the ship's shell should be dependent upon the degree of hazard presented by the products to be carried.

2. Ships subject to this Chapter should be designed to one of the following standards:

(1) A **"type 1 ship"** is a chemical tanker intended to transport **Sec 17** products with very severe environmental and safety hazards which require maximum preventive measures to preclude an escape of such cargo.

(2) A **"type 2 ship"** is a chemical tanker intended to transport **Sec 17** products with appreciably severe environmental and safety hazards which require significant preventive measures to preclude an escape of such cargo.

(3) A **"type 3 ship"** is a chemical tanker intended to transport **Sec 17** products with sufficiently severe environmental and safety hazards which require a moderate degree of containment to increase survival capability in a damaged condition.

Thus a type 1 ship is a chemical tanker intended for the transportation of products considered to present the greatest overall hazard and type 2 and type 3 ships for products of progressively lesser hazards. Accordingly, a type 1 ship should survive the most severe standard of damage and its cargo tanks should be located at the maximum prescribed distance inboard from the shell plating.

3. The ship type required for individual products is indicated in column "e" in the table of **Sec 17.**

4. If a ship is intended to carry more than one product listed in **Sec 17,** the standard of damage should correspond to that product having the most stringent ship type requirement. The requirements for the location of individual cargo tanks, however, are those for ship types related to the respective products intended to be carried.

202. Freeboard and intact stability (IBC Code 2.2)

1. Ships subject to this Chapter may be assigned the minimum freeboard permitted by the International Convention on Load Lines in force. However, the draught associated with the assignment should not be greater than the maximum draught otherwise permitted by this Chapter.

2. The stability of the ship in all seagoing conditions should be to a standard which is acceptable to the Society.

3. When calculating the effect of free surfaces of consumable liquids for loading conditions it should be assumed that, for each type of liquid, at least one transverse pair or a single centre tank has a free surface and the tank or combination of tanks to be taken into account should be those where the effect of free surfaces is the greatest. The free surface effect in undamaged compartments should be calculated by a method acceptable to the Society.

4. Solid ballast should not normally be used in double bottom spaces in the cargo area. Where, however, because of stability considerations, the fitting of solid ballast in such spaces becomes unavoidable, then its disposition should be governed by the need to ensure that the impact loads resulting from bottom damage are not directly transmitted to the cargo tank structure. **【See Guidance】**

5. The master of the ship should be supplied with a Loading and Stability Information booklet. This booklet should contain details of typical service and ballast conditions, provisions for evaluating other conditions of loading and a summary of the ship's survival capabilities. In addition, the booklet should contain sufficient information to enable the master to load and operate the ship in a safe and seaworthy manner.

6. All ships, subject to the requirements of the **IBC Code** shall be fitted with a stability instrument, capable of verifying compliance with intact and damage stability requirements, approved by the

Society having regard to the performance standards recommended by the Organization. 【See Guidance】

(1) ships constructed before 1 January 2016 shall comply with this requirement at the first scheduled renewal survey of the ship on or after 1 January 2016 but not later than 1 January 2021.
(2) notwithstanding the requirements of (1), a stability instrument fitted on a ship constructed before 1 January 2016 need not be replaced provided it is capable of verifying compliance with intact and damage stability, to the satisfaction of the Society.
(3) However where deemed appropriate by the Society, the requirements of **6.** may be exempted, and this exemption shall be specified in **IBC Certificate**.

7. The ships not subjected to **6.** are to be compliance with the requirements of flag states.

203. Shipside discharges below the freeboard deck (IBC Code 2.3) 【See Guidance】

1. The provision and control of valves fitted to discharges led through the shell from spaces below the freeboard deck or from with in the superstructures and deckhouses on the freeboard deck fitted with weathertight doors should comply with the requirements of the relevant regulation of the International Convention on Load Lines in force, except that the choice of valves should be limited to:

(1) one automatic non-return valve with a positive means of closing from above the freeboard deck; or
(2) where the vertical distance from the summer load waterline to the inboard end of the discharge pipe exceeds 0.01 L, two automatic non-return valves without positive means of closing, provided that the inboard valve is always accessible for examination under service conditions.

2. For the purpose of this Section **"summer load waterline"** and **"freeboard deck"**, have the meanings as defined in the International Convention on Load Lines in force.

3. The automatic non-return valves referred to in **Par 1** (1) and (2) should be of a type acceptable to the Society and should be fully effective in preventing admission of water into the ship, taking into account the sinkage, trim and heel in survival requirements in **209.** and should comply with recognized standards.

204. Conditions of loading (IBC Code 2.4)

Damage survival capability should be investigated on the basis of loading information submitted to the Society for all anticipated conditions of loading and variations in draught and trim. Ballast conditions where the chemical tanker is not carrying products covered by this Chapter, or is carrying only residues for such products, need not be considered.

205. Damage assumptions (IBC Code 2.5)

1. The assumed maximum extent of damage should be:

(1) Side damage:
(a) Longitudinal extent: 1/3 $L^{2/3}$ or 14.5 m, whichever is less
(b) Transverse extent: B/5 or 11.5 m, whichever is less, measured inboard from the ship's side at right angles to the centreline at the level of the summer load line
(c) Vertical extent: upwards without limit, from the moulded line of the bottom shell plating at centreline.

(2) Bottom damage: 【See Guidance】

	For 0.3 L from the forward perpendicular of the ship	Any other part of the ship
(a) Longitudinal extent:	1/3 $L^{2/3}$ or 14.5 m, whichever is less	1/3 $L^{2/3}$ or 5 m, whichever is less
(b) Transverse extent:	B/6 or 10 m, whichever is less	B/6 or 5 m, whichever is less
(c) Vertical extent:	B/15 or 6 m, whichever is less, measured from the moulded line of the bottom shell plating at centreline. (see **206. 2**)	B/15 or 6 m, whichever is less, measured from the moulded line of the bottom shell plating at centreline. (see **206. 2**)

2. Other damage:

If any damage of a lesser extent than the maximum damage specified in **Par 1** would result in a more severe condition, such damage should be considered.

206. Location of cargo tanks (IBC Code 2.6) 【See Guidance】

1. Cargo tanks should be located at the following distances inboard.

(1) Type 1 ships: from the side shell plating not less than the transverse extent of damage specified in **205. 1** (1) (b) and from the moulded line of the bottom shell plating at centreline not less than the vertical extent of damage specified in **205. 1** (2) (c) and nowhere less than 760 mm from the shell plating. This requirement does not apply to the tanks for diluted slops arising from tank washing.

(2) Type 2 ships: from the moulded line of the bottom shell plating at centreline not less than the vertical extent of damage specified in **205. 1** (2) (c) and nowhere less than 760 mm from the shell plating. This requirement does not apply to the tanks for diluted slops arising from tank washing.

(3) Type 3 ships: no requirement.

2. Except for type 1 ships, suction wells installed in cargo tanks may protrude into the vertical extent of bottom damage specified in **205. 1** (2) (c) provided that such wells are as small as practicable and the protrusion below the inner bottom plating does not exceed 25 % of the depth of the double bottom or 350 mm, whichever is less. Where there is no double bottom, the protrusion of the suction well of independent tanks below the upper limit of bottom damage should not exceed 350 mm. Suction wells installed in accordance with this paragraph may be ignored in determining the compartments affected by damage.

207. Flooding assumptions (IBC Code 2.7)

1. The requirements of **209.** should be confirmed by calculations which take into consideration the design characteristics of the ship; the arrangements, configuration and contents of the damaged compartments; the distribution, relative densities and the free surface effects of liquids; and the draught and trim for all conditions of loading.

2. The permeabilities of spaces assumed to be damaged should be as follows:

Spaces	Permeabilities
Appropriated to stores	0.60
Occupied by accommodation	0.95
Occupied by machinery	0.85
Voids	0.95
Intended for consumable liquids	0 to 0.95
Intended for other liquids	0 to 0.95

3. Wherever damage penetrates a tank containing liquids it should be assumed that the contents are

completely lost from that compartment and replaced by salt water up to the level of the final plane of equilibrium.

4. Every watertight division within the maximum extent of damage defined in **205. 1** and considered to have sustained damage in positions given in **208. 1** should be assumed to be penetrated. Where damage less than the maximum is being considered in accordance with **205. 2,** only watertight divisions or combinations of watertight divisions within the envelope of such lesser damage should be assumed to be penetrated.

5. The ship should be so designed as to keep unsymmetrical flooding to the minimum consistent with efficient arrangements.

6. Equalization arrangements requiring mechanical aids such as valves or cross-levelling pipes, if fitted, should not be considered for the purpose of reducing an angle of heel or attaining the minimum range of residual stability to meet the requirements of **209.** and sufficient residual stability should be maintained during all stages where equalization is used. Spaces which are linked by ducts of large cross-sectional area may be considered to be common. **【See Guidance】**

7. If pipes, ducts, trunks or tunnels are situated within the assumed extent of damage penetration, as defined in **205.,** arrangements should be such that progressive flooding cannot thereby extend to compartments other than those assumed to be flooded for each case of damage.

8. The buoyancy of any superstructure directly above the side damage should be disregarded. The unflooded parts of superstructures beyond the extent of damage, however, may be taken into consideration provided that: **【See Guidance】**
   (1) they are separated from the damaged space by watertight divisions and the requirements of **209. 3** in respect of these intact spaces are complied with; and
   (2) openings in such divisions are capable of being closed by remotely operated sliding watertight doors and unprotected openings are not immersed within the minimum range of residual stability required in **209.;** however the immersion of any other openings capable of being closed weathertight may be permitted.

208. Standard of damage (IBC Code 2.8) 【See Guidance】

1. Ships should be capable of surviving the damage indicated in **205.** with the flooding assumptions in **207.** to the extent determined by the ship's type according to the following standards:
   (1) A type 1 ship should be assumed to sustain damage anywhere in its length;
   (2) A type 2 ship of more than 150 m in length should be assumed to sustain damage anywhere in its length;
   (3) A type 2 ship of 150 m in length or less should be assumed to sustain damage anywhere in its length except involving either of the bulkheads bounding a machinery space located aft;
   (4) A type 3 ship of more than 225 m in length should be assumed to sustain damage anywhere in its length;
   (5) A type 3 ship of 125 m in length or more but not exceeding 225 m in length should be assumed to sustain damage anywhere in its length except involving either of the bulkheads bounding a machinery space located aft;
   (6) A type 3 ship below 125 m in length should be assumed to sustain damage anywhere in its length except involving damage to the machinery space when located aft. However, the ability to survive the flooding of the machinery space should be considered by the Society.

2. In the case of small type 2 and type 3 ships which do not comply in all respects with the appropriate requirements of **Par 1** (3) and (6), special dispensation may only be considered by the Society provided that alternative measures can be taken which maintain the same degree of safety.

209. Survival requirements (IBC Code 2.9) 【See Guidance】

1. Ships subject to this Chapter should be capable of surviving the assumed damage specified in **205.** to the standard provided in **208.** in a condition of stable equilibrium and should satisfy the following criteria.

2. In any stage of flooding: *(2024)*

(1) the waterline, taking into account sinkage, heel and trim, should be below the lower edge of any opening through which progressive flooding or downflooding may take place. Such openings should include air pipes and openings which are closed by means of weathertight doors or hatch covers. But the opening that are closed by the following means may be excluded.
(A) watertight manhole covers and watertight flush scuttles,
(B) small watertight cargo tank hatch covers that maintain the high integrity of the deck,
(B) remotely operated sliding watertight doors,
(D) hinged watertight access doors with open/closed indication locally and at the navigation bridge, of the quick-acting or single-action type that are normally closed at sea,
(E) hinged watertight doors that are permanently closed at sea, and
(F) sidescuttles of the non-opening type;

(2) the maximum angle of heel due to unsymmetrical flooding should not exceed 25° except that this angle may be increased up to 30° if no deck immersion occurs;

(3) the residual stability during intermediate stages of flooding should be to the satisfaction of the Society. However, it should never be significantly less than that required by **Par 3.**

3. At final equilibrium after flooding:

(1) the righting lever curve should have a minimum range of 20° beyond the position of equilibrium in association with a maximum residual righting lever of at least 0.1 m within the 20° range; the area under the curve within this range should not be less than 0.0175 m · rad. Unprotected openings should not be immersed within this range unless the space concerned is assumed to be flooded. Within this range, the immersion of any of the openings listed in **Par 2** (1) and other openings capable of being closed weathertight may be permitted; and

(2) the emergency source of power should be capable of operating.

Section 3 Ship Arrangements

301. Cargo segregation (IBC Code 3.1) 【See Guidance】

1. Unless expressly provided otherwise, tanks containing cargo or residues of cargo subject to this Chapter should be segregated from accommodation, service and machinery spaces and from drinking water and stores for human consumption by means of a cofferdam, void space, cargo pump room, pump room, empty tank, oil fuel tank or other similar space.

2. Cargoes, residues of cargoes or mixtures containing cargoes which react in a hazardous manner with other cargoes, residues or mixtures, should:
   (1) be segregated from such other cargoes by means of a cofferdam, void space, cargo pump room, pump room, empty tank, or tank containing a mutually compatible cargo
   (2) have separate pumping and piping systems which should not pass through other cargo tanks containing such cargoes, unless encased in a tunnel and
   (3) have separate tank venting systems.

3. Cargo piping should not pass through any accommodation, service or machinery space other than cargo pump rooms or pump rooms.

4. If cargo piping systems or cargo ventilation systems are to be separated, this separation may be achieved by the use of design or operational methods. Operational methods shall not be used within a cargo tank and shall consist of one of the following type:
   (1) removing spool-pieces or valves and blanking the pipe ends.
   (2) arrangement of two spectacle flanges in series, with provisions for detecting leakage into the pipe between the two spectacle flanges.

5. Cargoes subject to this Chapter should not be carried in either the fore or aft peak tank.

302. Accommodation, service and machinery spaces and control stations (IBC Code 3.2) 【See Guidance】

1. No accommodation or service spaces or control stations should be located within the cargo area except over a cargo pump room recess or pump room recess that complies with SOLAS regulations II-2/4.5.1 to 4.5.2.4 and no cargo or slop tank should be aft of the forward end of any accommodation.

2. In order to guard against the danger of hazardous vapours, due consideration should be given to the location of air intakes and openings into accommodation, service and machinery spaces and control stations in relation to cargo piping and cargo vent systems.

3. Entrances, air inlets and openings to accommodation, service and machinery spaces and control stations should not face the cargo area. They should be located on the end bulkhead not facing the cargo area and/or on the outboard side of the superstructure or deck house at a distance of at least 4 % of the length (L) of the ship but not less than 3 m from the end of the superstructure or deckhouse facing the cargo area. This distance, however, need not exceed 5 m. No doors should be permitted within the limits mentioned above, except that doors to those spaces not having access to accommodation and service spaces and control stations, such as cargo control stations and store-rooms may be fitted. Where such doors are fitted, the boundaries of the space should be insulated to "A-60" standard. Bolted plates for removal of machinery may be fitted within the limits specified above. Wheelhouse doors and wheel house windows may be located within the limits specified above so long as they are so designed that a rapid and efficient gas- and vapour-tightening of the wheelhouse can be ensured. Windows and sidescuttles facing the cargo area and on the sides of the super structures and deckhouses within the limits specified above should be of the fixed (non-opening) type. Such sidescuttles in the first tier on the main deck should be fitted with inside covers of steel or equivalent material.

303. Cargo pump rooms (IBC Code 3.3) 【See Guidance】

1. Cargo pump rooms should be so arranged as to ensure:
   (1) unrestricted passage at all times from any ladder platform and from the floor and

(2) unrestricted access to all valves necessary for cargo handling for a person wearing the required personnel protective equipment.

2. Permanent arrangements should be made for hoisting an injured person with a rescue line while avoiding any projecting obstacles.

3. Guard railings should be installed on all ladders and platforms.

4. Normal access ladders should not be fitted vertical and should incorporate platforms at suitable intervals.

5. Means should be provided to deal with drainage and any possible leakage from cargo pumps and valves in cargo pump rooms. The bilge system serving the cargo pump room should be operable from outside the cargo pump room. One or more slop tanks for storage of contaminated bilge water or tank washings should be provided. A shore connection with a standard coupling or other facilities should be provided for transferring contaminated liquids to onshore reception facilities.

6. Pump discharge pressure gauges should be provided outside the cargo pump room.

7. Where machinery is driven by shafting passing through a bulkhead or deck, gastight seals with efficient lubrication or other means of ensuring the permanence of the gas seal should be fitted in way of the bulkhead or deck.

304. Access to spaces in the cargo area (IBC Code 3.4) 【See Guidance】

1. Access to cofferdams, ballast tanks, cargo tanks and other spaces in the cargo area should be direct from the open deck and such as to ensure their complete inspection. Access to double bottom spaces may be through a cargo pump room, pump room, deep cofferdam, pipe tunnel or similar compartments, subject to consideration of ventilation aspects.

2. For access through horizontal openings, hatches or manholes, the dimensions should be sufficient to allow a person wearing a self-contained air breathing apparatus and protective equipment to ascend or descend any ladder without obstruction and also to provide a clear opening to facilitate the hoisting of an injured person from the bottom of the space. The minimum clear opening should be not less than 600 mm by 600 mm.

3. For access through vertical openings, or manholes providing passage through the length and breadth of the space, the minimum clear opening should be not less than 600 mm by 800 mm at a height of not more than 600 mm from the bottom shell plating unless gratings or other footholds are provided.

4. Smaller dimensions may be approved by the Society in special circumstances, if the ability to traverse such openings or to remove an injured person can be proved to the satisfaction of the Society.

305. Bilge and ballast arrangements (IBC Code 3.5) 【See Guidance】

1. Pumps, ballast lines, vent lines and other similar equipment serving permanent ballast tanks should be independent of similar equipment serving cargo tanks and of cargo tanks themselves. Discharge arrangements for permanent ballast tanks sited immediately adjacent to cargo tanks should be outside machinery spaces and accommodation spaces. Filling arrangements may be in the machinery spaces provided that such arrangements ensure filling from tank deck level and non return valves are fitted.

2. Filling of ballast in cargo tanks may be arranged from deck level by pumps serving permanent ballast tanks, provided that the filling line has no permanent connection to cargo tanks or piping and that non-return valves are fitted.

3. Bilge pumping arrangements for cargo pump rooms, pump rooms, void spaces, slop tanks, double bottom tanks and similar spaces should be situated entirely within the cargo area except for void spaces, double bottom tanks and ballast tanks were such spaces are separated from tanks containing cargo or residues of cargo by a double bulkhead.

306. Pump and pipeline identification (IBC Code 3.6) 【See Guidance】

Provisions should be made for the distinctive marking of pumps, valves and pipelines to identify the service and tanks which they serve.

307. Bow or stern loading and unloading arrangements (IBC Code 3.7) 【See Guidance】

1. Cargo piping may be fitted to permit bow or stern loading and unloading. Portable arrangements should not be permitted.

2. Bow or stern loading and unloading lines should not be used for the transfer of products required to be carried in type 1 ships. Bow and stern loading and unloading lines should not be used for the transfer of cargoes emitting toxic vapours required to comply with **1512. 1,** unless specifically approved by the Society.

3. In addition to **501.,** the following provisions apply:

(1) The piping outside the cargo area should be fitted at least 760 mm inboard on the open deck. Such piping should be clearly identified and fitted with a shutoff valve at its connection to the cargo piping system within the cargo area. At this location, it should also be capable of being separated by means of a removable spool piece and blank flanges when not in use.

(2) The shore connection should be fitted with a shutoff valve and a blank flange.

(3) The piping should be full penetration butt-welded, and fully radiographed. Flange connections in the piping should only be permitted within the cargo area and at the shore connection.

(4) Spray shields should be provided at the connections specified in (1) as well as collecting trays of sufficient capacity with means for the disposal of drainage.

(5) The piping should be self-draining to the cargo area and preferably into a cargo tank. Alternative arrangements for draining the piping may be accepted by the Society.

(6) Arrangements should be made to allow such piping to be purged after use and maintained gas-safe when not in use. The vent pipes connected with the purge should be located in the cargo area. The relevant connections to the piping should be provided with a shutoff valve and blank flange.

4. Entrances, air inlets and openings to accommodation, service and machinery spaces and control stations should not face the cargo shore connection location of bow or stern loading and unloading arrangements. They should be located on the outboard side of the superstructure or deckhouse at a distance of at least 4 % of the length of the ship but not less than 3 m from the end of the house facing the cargo shore connection location of the bow or stern loading and unloading arrangements. This distance, however, need not exceed 5 m. Sidescuttles facing the shore-connection location and on the sides of the superstructure or deckhouse within the distance mentioned above should be of the fixed (non-opening) type. In addition, during the use of the bow or stern loading and unloading arrangements, all doors, ports and other openings on the corresponding superstructure or deckhouse side should be kept closed. Where, in the case of small ships, compliance with **302. 3** and this paragraph is not possible, the Society may approve relaxations from the above requirements.

5. Air pipes and other openings to enclosed spaces not listed in **307. 4** should be shielded from any spray which may come from a burst hose or connection.

6. Escape routes should not terminate within the coamings required by **307. 7** or within a distance of 3 m beyond the coamings.

7. Continuous coamings of suitable height should be fitted to keep any spills on deck and away from the accommodation and service areas.

8. Electrical equipment within the coamings required by **307. 7** or within a distance of 3 m beyond the coamings should be in accordance with the requirements of **Sec 10.**

9. Fire-fighting arrangements for the bow or stern loading and unloading areas should be in accordance with **1103. 16.**

10. Means of communication between the cargo control station and the cargo shore connection location should be provided and certified safe, if necessary. Provision should be made for the remote shutdown of cargo pumps from the cargo shoreconnection location.

Section 4 Cargo Containment

401. Definitions (IBC Code 4.1)

1. **"Independent tank"** means a cargo containment envelope which is not contiguous with, or part of, the hull structure. An independent tank is built and installed so as to eliminate whenever possible (or in any event to minimize) its stressing as a result of stressing or motion of the adjacent hull structure. An independent tank is not essential to the structural completeness of the ship's hull.
2. **"Integral tank"** means a cargo containment envelope which forms part of the ship's hull and which may be stressed in the same manner and by the same loads which stress the contiguous hull structure and which is normally essential to the structural completeness of the ship's hull.
3. **"Gravity tank"** means a tank having a design pressure not greater than 0.07 MPa gauge at the top of the tank. A gravity tank may be independent or integral. A gravity tank should be constructed and tested according to recognized standards taking account of the temperature of carriage and relative density of the cargo.
4. **"Pressure tank"** means a tank having a design pressure greater than 0.07 MPa gauge. A pressure tank should be an independent tank and should be of a configuration permitting the application of pressure vessel design criteria according to recognized standards.

402. Tank type requirements for individual products (IBC Code 4.2)

Requirements for both installation and design of tank types for individual products are shown in column "f" in the table of **Sec 17.**

Section 5 Cargo Transfer

501. Piping scantlings (IBC Code 5.1)

1. Subject to the conditions stated in **Par 4** the wall thickness (t) of pipes should not be less than:

$$t = \frac{t_0 + b + c}{1 - \frac{a}{100}} \quad (\mathrm{mm})$$

where:

t_0 = theoretical thickness

$$t_0 = \frac{P \cdot D}{2K \cdot e + P} \quad (\mathrm{mm})$$

with

P : design pressure (MPa) referred to in **Par 2**

D : outside diameter (mm)

K : allowable stress ($\mathrm{N/mm^2}$) referred to in **Par 5**

e : efficiency factor; equal to 1.0 for seamless pipes and for longitudinally or spirally welded pipes, delivered by manufacturers approved for making welded pipes, which are considered equivalent to seamless pipes wnen non-destructive testing on welds is carried out in accordance with recognized standards. In other cases, an efficiency factor of less than 1.0, in accordance with recognized standards, may be required depending on the manufacturing process.

b : allowance for bending (mm). The value of b should be chosen so that the calculated stress in the bend, due to internal pressure only, does not exceed the allowable stress. Where such justification is not given, b should be not less than:

$$b = \frac{D \cdot t_0}{2.5r} \quad (\mathrm{mm})$$

with

r : mean radius of the bend (mm).

c : corrosion allowance (mm). If corrosion or erosion is expected, the wall thickness of piping should be increased over that required by the other design requirements.

a : negative manufacturing tolerance for thickness (%).

2. The design pressure P in the formula for t_0 in **Par 1** is the maximum gauge pressure to which the system may be subjected in service, taking into account the highest set pressure on any relief valve on the system.

3. Piping and piping system components which are not protected by a relief valve, or which may be isolated from their relief valve, should be designed for at least the greatest of:

(1) for piping systems or components which may contain some liquid, the saturated vapour pressure at 45°C;

(2) the pressure setting of the associated pump discharge relief valve;

(3) the maximum possible total pressure head at the outlet of the associated pumps when a pump discharge relief valve is not installed.

4. The design pressure should not be less than 1.0 MPa gauge except for open-ended lines where it should be not less than 0.5 MPa gauge.

5. For pipes, the allowable stress to be considered in the formula for to in **Par 1** is the lower of the following values:

R_m/A or R_e/B

where:

R_m : specified minimum tensile strength at ambient temperature ($\mathrm{N/mm^2}$)

R_e : specified minimum yield stress at ambient temperature ($\mathrm{N/mm^2}$). If the stress-strain curve does not show a defined yield stress, the 0.2 % proof stress applies.

A and B should have values of at least A = 2.7 and B = 1.8

6. (1) The minimum wall thickness should be in accordance with recognized standards. **【See Guidance】**

(2) Where necessary for mechanical strength to prevent damage, collapse, excessive sag or buckling of pipes due to weight of pipes and content and to superimposed loads from supports, ship deflection or other causes, the wall thickness should be increased over that required by **Par 1** or, if this is impracticable or would cause excessive local stresses, these loads should be reduced, protected against or eliminated by other design methods. **【See Guidance】**

(3) Flanges, valves and other fittings should be in accordance with recognized standards, taking into account the design pressure defined under **Par 2.** **【See Guidance】**

(4) For flanges not complying with a standard the dimensions of flanges and associated bolts should be to the satisfaction of the Society. **【See Guidance】**

502. Piping fabrication and joining details (IBC Code 5.2)

1. The requirements of this Article apply to piping inside and outside the cargo tanks. However, relaxations from these requirements may be accepted in accordance with recognized standards for open-ended piping and for piping inside cargo tanks except for cargo piping serving other cargo tanks.

2. Cargo piping should be joined by welding except: **【See Guidance】**

(1) for approved connections to shutoff valves and expansion joints; and

(2) for other exceptional cases specifically approved by the Society.

3. The following direct connections of pipe lengths, without flanges may be considered:

(1) Butt-welded joints with complete penetration at the root may be used in all applications. **【See Guidance】**

(2) Slip-on welded joints with sleeves and related welding having dimensions in accordance with recognized standards should only be used for pipes with an external diameter of 50 mm or less. This type of joint should not be used when crevice corrosion is expected to occur.

(3) Screwed connections in accordance with recognized standards should only be used for accessory lines and instrumentation lines with external diameters of 25 mm or less.

4. Expansion of piping should normally be allowed for by the provision of expansion loops or bends in the piping system.

(1) Bellows in accordance with recognized standards may be specially considered. **【See Guidance】**

(2) Slip joints should not be used.

5. Welding, post-weld heat treatment and non-destructive testing should be performed in accordance with Recognized Standards.

503. Flange connections (IBC Code 5.3)

1. Flanges should be of the welded neck, slip-on or socket-welded type. However, socket-welded type flanges should not be used in nominal size above 50 mm.

2. Flanges should comply with recognized standards as to their type, manufacture and test

【See Guidance】

504. Test requirements for piping (IBC Code 5.4) 【See Guidance】

1. The test requirements of this Article apply to piping inside and outside cargo tanks. However, relaxations from these requirements may be accepted in accordance with recognized standards for piping inside tanks and open-ended piping.

2. After assembly, each cargo piping system should be subject to a hydrostatic test to at least 1.5 times the design pressure. When piping systems or parts of systems are completely manufactured and equipped with all fittings, the hydrostatic test may be conducted prior to installation aboard the ship. Joints welded on board should be hydrostatically tested to at least 1.5 times the design pressure.

3. After assembly on board, each cargo piping system should be tested for leaks to a pressure depending on the method applied.

505. Piping arrangements (IBC Code 5.5)

1. Cargo piping should not be installed under deck between the outboard side of the cargo containment spaces and the skin of the ship unless clearances required for damage protection (see **206.**) are maintained; but such distances may be reduced where damage to the pipe would not cause release of cargo provided that the clearance required for inspection purposes is maintained.

2. Cargo piping, located below the main deck, may run from the tank it serves and penetrate tank bulkheads or boundaries common to longitudinally or transversally adjacent cargo tanks, ballast tanks, empty tanks, pump rooms or cargo pump rooms provided that inside the tank it serves it is fitted with a stop valve operable from the weather deck and provided cargo compatibility is assured in the event of piping failure. As an exception, where a cargo tank is adjacent to a cargo pump room, the stop valve operable from the weather deck may be situated on the tank bulkhead on the cargo pump room side, provided an additional valve is fitted between the bulkhead valve and the cargo pump. A totally enclosed hydraulically-operated valve located outside the cargo tank may, however, be accepted, provided that the valve is: 【See Guidance】
   (1) designed to preclude the risk of leakage
   (2) fitted on the bulkhead of the cargo tank which it serves
   (3) suitably protected against mechanical damage
   (4) fitted at a distance from the shell, as required for damage protection and
   (5) operable from the weather deck.

3. In any cargo pump room where a pump serves more than one tank, a stop valve should be fitted in the line to each tank.

4. Cargo piping installed in pipe tunnels should also comply with the requirements of **Pars 1** and **2.** Pipe tunnels should satisfy all tank requirements for construction, location and ventilation and electrical hazard requirements. Cargo compatibility should be assured in the event of a piping failure. The tunnel should not have any other openings except to the weather deck and cargo pump room or pump room.

5. Cargo piping passing through bulkheads should be so arranged as to preclude excessive stresses at the bulkhead and should not utilize flanges bolted through the bulkhead.

506. Cargo transfer control systems (IBC Code 5.6)

1. For the purpose of adequately controlling the cargo, cargo transfer systems should be provided with: 【See Guidance】
   (1) one stop valve capable of being manually operated on each tank filling and discharge line, located near the tank penetration; if an individual deepwell pump is used to discharge the contents of a cargo tank, a stop valve is not required on the discharge line of that tank;
   (2) one stop valve at each cargo hose connection;
   (3) remote shutdown devices for all cargo pumps and similar equipment.

2. The controls necessary during transfer or transport of cargoes covered by this Chapter other than in cargo pump rooms which have been dealt with elsewhere in this Chapter should not be located below the weather deck.

3. For certain products, additional cargo transfer control requirements are shown in column "o" in the table of **Sec 17.**

507. Ship's cargo hoses (IBC Code 5.7)

1. Liquid and vapour hoses used for cargo transfer should be compatible with the cargo and suitable for the cargo temperature. **【See Guidance】**
2. Hoses subject to tank pressure or the discharge pressure of pumps should be designed for a bursting pressure not less than 5 times the maximum pressure the hose will be subjected to during cargo transfer.
3. For cargo hoses installed on board ships on or after 1 July 2002, each new type of cargo hose, complete with end-fittings, should be prototype-tested at a normal ambient temperature with 200 pressure cycles from zero to at least twice the specified maximum working pressure. After this cycle pressure test has been carried out, the prototype test should demonstrate a bursting pressure of at least 5 times its specified maximum working pressure at the extreme service temperature. Hoses used for prototype testing should not be used for cargo service. Thereafter, before being placed in service, each new length of cargo hose produced should be hydrostatically tested at ambient temperature to a pressure not less than 1.5 times its specified maximum working pressure but not more than two fifths of its bursting pressure. The hose should be stencilled or otherwise marked with its specified maximum working pressure and, if used in other than ambient temperature services, its maximum and minimum service temperature as applicable. The specified maximum working pressure should not be less than 1.0 MPa gauge.

508. Integrated cargo and ballast driving systems

Emergency stopping devices and control systems of integrated hydraulic and/or electric system used to drive both cargo and ballast pumps including active control and safety systems(hereinafter referred to as「integrated cargo and ballast driving system」) are to comply with following requirements.

1. Emergency stopping devices of integrated cargo and ballast driving system are to be independent from control systems. A single failure in the emergency stopping devices or the control systems is not to render the integrated cargo and ballast driving system inoperative.
2. Manual emergency stops of cargo pumps are to be arranged in a way that they are not to cause the stop of the hydraulic power source.
3. The control systems are to be provided with backup power supply, which may be satisfied by a duplicate power supply from the main switch board.

   The failure of any power supply is to provide audible and visible alarm activation at each location where the control panel is fitted.
4. Manual overriding or redundant arrangements are to be provided within the control systems to be made available for the operation of the integrated cargo and ballast driving system in the event of failure of the automatic or remote control systems.

Section 6 Materials of Construction

601. General (IBC Code 6.1)

1. Structural materials used for tank construction, together with associated piping, pumps, valves, vents and their jointing materials, should be suitable at the temperature and pressure for the cargo to be carried in accordance with recognized standards. Steel is assumed to be the normal material of construction.

2. The shipyard is responsible for providing compatibility information to the ship operator and/or master. This must be done in a timely manner before delivery of the ship or on completion of a relevant modification of the material of construction.

3. Where applicable the following should be taken into account in selecting the material of construction:

(1) notch ductility at the operating temperature
(2) corrosive effect of the cargo
(3) possibility of hazardous reactions between the cargo and the material of construction and
(4) suitability of linings.

4. The shipper of the cargo is responsible for providing compatibility information to the ship operator and/or master. This must be done in a timely manner before transportation of the product. The cargo shall be compatible with all materials of construction such that :

(1) no damages to the integrity of the materials of construction is incurred and/or
(2) no hazardous, or potentially hazardous reaction is created.

5. When a product is submitted to IMO for evaluation, and where compatibility of the product with materials referred to in paragraph 1 renders special requirements, the BLG Product Data Reporting form shall provide information on the required materials of construction. These requirements shall be reflected in **Sec 15** and consequentially be referred to in column o of **Sec 17**. The reporting form shall also indicate if no special requirements are necessary. The products of the product is responsible for providing the correct information.

Section 7 Cargo Temperature Control

701. General (IBC Code 7.1) 【See Guidance】

1. When provided, any cargo heating or cooling systems should be constructed, fitted and tested to the satisfaction of the Society. Materials used in the construction of temperature control systems should be suitable for use with the product intended to be carried.

2. Heating or cooling media should be of a type approved for use with the specific cargo. Consideration should be given to the surface temperature of heating coils or ducts to avoid dangerous reactions from localized overheating or overcooling of cargo. (see also **1513. 6**)

3. Heating or cooling systems should be provided with valves to isolate the system for each tank and to allow manual regulation of flow.

4. In any heating or cooling system, means should be provided to ensure that, when in any condition other than empty, a higher pressure can be maintained within the system than the maximum pressure head that could be exerted by the cargo tank contents on the system.

5. Means should be provided for measuring the cargo temperature.
   (1) The means for measuring the cargo temperature should be of restricted or closed type, respectively, when a restricted or closed gauging device is required for individual substances as shown in column "j" in the table of **Sec 17.**
   (2) A restricted temperature-measuring device is subject to the definition for a restricted gauging device in **1301. 1** (2), e.g. a portable thermometer lowered inside a gauge tube of the restricted type.
   (3) A closed temperature measuring device is subject to the definition for closed gauging device in **1301. 1** (3), e.g. a remote-reading thermometer of which the sensor is installed in the tank.
   (4) When overheating or overcooling could result in a dangerous condition, an alarm system which monitors the cargo temperature should be provided. (See also operational requirements in **1606**.)

6. When products for which **1512., 1512. 1** or **3** are listed in column "o" in the table of **Sec 17** are being heated or cooled, the heating or cooling medium should operate in a circuit:
   (1) which is independent of other ship's services, except for another cargo heating or cooling system, and which does not enter the machinery space or
   (2) which is external to the tank carrying toxic products or
   (3) Where the medium is sampled to check for the presence of cargo before it is recirculated to other services of the ship or into the machinery space. The sampling equipment should be located within the cargo area and be capable of detecting the presence of any toxic cargo being heated or cooled. Where this method is used, the coil return should be tested not only at the commencement of heating or cooling of a toxic product, but also on the first occasion the coil is used subsequent to having carried an unheated or uncooled toxic cargo.

702. Additional requirements (IBC Code 7.2)

For certain products, additional requirements contained in **Sec 15** are shown in column "o" in the table of **Sec 17.**

Section 8 Cargo Tank Venting and Gas-freeing Arrangements

801. Application (IBC Code 8.1)

1. Unless expressly provided otherwise, this section applies to ships constructed on or after 1 January 1994.

2. Ship constructed before 1 January 1994 shall comply with the requirements of Section 8 of the Rules which were in force prior to the said date.

3. Ships constructed on or after 1 July 1986 but before 1 January 1994 which fully comply with the requirements of the Rules at that time may be regarded as complying with the requirements of SOLAS regulation II-2/4.5.3, 4.5.6, to 4.5.8, 4.5.10 and 11.6.

4. For ships to which this Chapter applies, the requirements of this Section shall apply in lieu of regulation II-2/4.5.3(Cargo tank venting) and 4.5.6(Inerting, purging and gas freeing) and 16.3.2(Procedures for cargo tank purging and gas-freeing) of the 1974 SOLAS Convention, as amended.

5. Ships constructed on or after 1 July 1986, but before 1 July 2002 shall comply with the paragraph **803. 3**. However, the Society may approve relaxation of the requirements for ships of less than 500 gross tonnage which were constructed on or after 1 July 1986, but before 1 July 2002.

802. Cargo tank venting (IBC Code 8.2)

1. All cargo tanks should be provided with a venting system appropriate to the cargo being carried and these systems should be independent of the air pipes and venting systems of all other compartments of the ship. Tank venting systems should be designed so as to minimize the possibility of cargo vapour accumulating about the decks, entering accommodation, service and machinery spaces and control stations and in the case of flammable vapours entering or collecting in spaces or areas containing sources of ignition. Tank venting systems should be arranged to prevent entrance of water into the cargo tanks and at the same time, vent outlets should direct the vapour discharge upwards in the form of unimpeded jets. **【See Guidance】**

2. The venting systems should be connected to the top of each cargo tank and as far as practicable the cargo vent lines should be self-draining back to the cargo tanks under all normal operational conditions of list and trim. Where it is necessary to drain venting systems above the level of any pressure/vacuum valve, capped or plugged drain cocks should be provided. **【See Guidance】**

3. Provision should be made to ensure that the liquid head in any tank does not exceed the design head of the tank. Suitable high-level alarms, overflow control systems or spill valves, together with gauging and tank filling procedures may be accepted for this purpose. Where the means of limiting cargo tank overpressure includes an automatic closing valve, the valve should comply with the appropriate provisions of **1519.** **【See Guidance】**

4. Tank venting systems should be designed and operated so as to ensure that neither pressure nor vacuum created in the cargo tanks during loading or unloading exceeds tank design parameters. The main factors to be considered in the sizing of a tank venting system are as follows:

(1) design loading and unloading rate **【See Guidance】**
(2) gas evolution during loading: this should be taken account of by multiplying the maximum loading rate by a factor of at least 1.25
(3) density of the cargo vapour mixture
(4) pressure loss in vent piping and across valves and fittings
(5) pressure/vacuum settings of relief devices.

5. Tank vent piping connected to cargo tanks of corrosion-resistant material, or to tanks which are lined or coated to handle special cargoes as required by this Chapter, should be similarly lined or coated or constructed of corrosion-resistant material.

6. The master should be provided with the maximum permissible loading and unloading rates for each tank or group of tanks consistent with design of the venting systems.

803. Types of tank venting systems (IBC Code 8.3)

1. An open tank venting system is a system which offers no restriction except for friction losses to the free flow of cargo vapours to and from the cargo tanks during normal operations, An open venting system may consist of individual vents from each tank, or such individual vents may be combined into a common header or headers, with due regard to cargo segregation. In no case should shutoff valves be fitted either to the individual vents or to the header. 【See Guidance】

2. A controlled tank venting system is a system in which pressure and vacuum relief valves or pressure/vacuum valves are fitted to each tank to limit the pressure or vacuum in the tank. A controlled venting system may consist of individual vents from each tank or such individual vents on the pressure side only as may be combined into a common header or headers with due regard to cargo segregation. In no case should shutoff valves be fitted either above or below pressure or vacuum relief valves or pressure/vacuum valves. Provision may be made for bypassing a pressure or vacuum valve or pressure/vacuum valve under certain operating conditions provided that the requirement of **Par 6** is maintained and that there is suitable indication to show whether or not the valve is bypassed. 【See Guidance】

3. On ships constructed on or after 1 July 2002, controlled tank venting systems should consist of a primary and a secondary means of allowing full flow relief of vapour to prevent over-pressure or under-pressure in the event of failure of one means. Alternatively, the secondary means may consist of pressure sensors fitted in each tank with a monitoring system in the ship's cargo control room or position from which cargo operations are normally carried out. Such monitoring equipment should also provide an alarm facility which is activated by detection of over-pressure or under-pressure conditions within a tank.

4. The position of vent outlets of a controlled tank venting system should be arranged:
   (1) at a height of not less than 6 m above the weather deck or above a raised walkway if fitted within 4 m of the raised walkway; 【See Guidance】
   (2) at a distance of at least 10 m measured horizontally from the nearest air intake or opening to accommodation, service and machinery spaces and ignition sources.

5. The vent outlet height referred to in **4** (1) may be reduced to 3 m above the deck or a raised walkway, as applicable, provided that high velocity venting valves of a type approved by the Society, directing the vapour/air mixture upwards in an unimpeded jet with an exit velocity of at least 30 m/s, are fitted. 【See Guidance】

6. Controlled tank venting systems fitted to tanks to be used for cargoes having a flashpoint not exceeding 60°C (closed cup test) should be provided with devices to prevent the passage of flame into the cargo tanks. The design, testing and locating of the devices should comply with the requirements of the Society, which should contain at least the standards adopted by the Organization. 【See Guidance】

7. In designing venting systems and in the selection of devices to prevent the passage of flame for incorporation into the tank venting system, due attention should be paid to the possibility of the blockage of these systems and fittings by, for example, the freezing of cargo vapour, polymer build up, atmospheric dust or icing up in adverse weather conditions. In this context it should be noted that flame arresters and flame screens are more susceptible to blockage. Provisions should be made such that the system and fittings may be inspected, operationally checked, cleaned or renewed as applicable. 【See Guidance】

8. Reference in **Pars 1** and **2** to the use of shutoff valves in the venting lines should be interpreted to extend to all other means of stoppage, including spectacle blanks and blank flanges.

804. Venting requirements for individual products (IBC Code 8.4)

Venting requirements for individual products are shown in column "g", and additional requirements in column "o" in the table of **Sec 17.**

805. Cargo tank purging

When the application of inert gas is required by **1101. 1**, before gas-freeing, the cargo tanks shall be purged with inert gas through outlet pipes with cross-sectional area such that an exit velocity of

at least 20 m/s can be maintained when any three tanks are being simultaneously supplied with inert gas. The outlets shall extend not less than 2 m above the deck level. Purging shall continue until the concentration of hydrocarbon or other flammable vapours in the cargo tanks has been reduced to less than 2 % by volume.

806. Cargo tank gas-freeing (IBC Code 8.5) 【See Guidance】

1. The arrangements for gas-freeing cargo tanks used for cargoes other than those for which open venting is permitted should be such as to minimize the hazards due to the dispersal of flammable or toxic vapours in the atmosphere and to flammable or toxic vapour mixtures in a cargo tank. Accordingly, gas-freeing operations should be carried out such that vapour is initially discharged:

(1) through the vent outlets specified in **803. 4** and **803. 5;** or

(2) through outlets at least 2 m above the cargo tank deck level with a vertical efflux velocity of at least 30 m/s maintained during the gas- freeing operation; or

(3) through outlets at least 2 m above the cargo tank deck level with a vertical efflux velocity of at least 20 m/s which are protected by suitable devices to prevent the passage of flame.

When the flammable vapour concentration at the outlets has been reduced to 30 % of the lower flammable limit and, in the case of a toxic product, the vapour concentration does not present a significant health hazard, gas-freeing may thereafter be continued at cargo tank deck level.

2. The outlets referred to in **1** (2) and **1** (3) may be fixed or portable pipes.

3. In designing a gas-freeing system in conformity with **Par 1,** particularly in order to achieve the required exit velocities of **1** (2) and **1** (3), due consideration should be given to the following:

(1) materials of construction of system

(2) time to gas-free

(3) flow characteristics of fans to be used

(4) the pressure losses created by ducting, piping, cargo tank inlets and outlets

(5) the pressure achievable in the fan driving medium (e.g. water or compressed air)

(6) the densities of the cargo vapour/air mixtures for the range of cargoes to be carried.

Section 9 Environmental Control

901. General (IBC Code 9.1)

1. Vapour spaces within cargo tanks and, in some cases, spaces surrounding cargo tanks may require to have specially controlled atmospheres.

2. There are four different types of control for cargo tanks, as follows:

(1) Inerting – by filling the cargo tank and associated piping systems and, where specified in **Sec 15,** the spaces surrounding the cargo tanks, with a gas or vapour which will not support combustion and which will not react with the cargo, and maintaining that condition.

(2) Padding– by filling the cargo tank and associated piping systems with a liquid, gas or vapour which separates the cargo from the air, and maintaining that condition.

(3) Drying – by filling the cargo tank and associated piping systems with moisture-free gas or vapour with a dewpoint of -40°C or below at atmospheric pressure, and maintaining that condition.

(4) Ventilation – forced or natural.

3. Where inerting or padding of cargo tanks is required by in column "h" of **Annex 7B-1**:

(1) An adequate supply of inert gas for use in filling and discharging the cargo tanks should be carried or should be manufactured on board unless a shore supply is available. In addition, sufficient inert gas should be available on the ship to compensate for normal losses during transportation. **【See Guidance】**

(2) The inert gas system on board the ship should be able to maintain a pressure of at least 0.007 MPa gauge within the containment system at all times. In addition, the inert gas system should not raise the cargo tank pressure to more than the tank's relief valve setting.

(3) Where padding is used, similar arrangements for supply of the padding medium should be made as required for inert gas in (1) and (2).

(4) Means should be provided for monitoring ullage spaces containing a gas blanket to ensure that the correct atmosphere is being maintained. **【See Guidance】**

(5) Inerting or padding arrangements or both, where used with flammable cargoes, should be such as to minimize the creation of static electricity during the admission of the inerting medium.

4. Where drying is used and dry nitrogen is used as the medium, similar arrangements for supply of the drying agent should be made to those required in **Par 3.** Where agents are used as the drying medium on all air inlets to the tank, sufficient medium should be carried for the duration of the voyage, taking into consideration the diurnal temperature range and the expected humidity.

902. Environmental control requirements for individual products (IBC Code 9.2)

The required types of environmental control for certain products are shown in column "h" in the table of **Sec 17.**

Section 10 Electrical Installations

1001. General (IBC Code 10.1)

1. The provisions of this Section are applicable to ships carrying cargoes which are inherently, or due to their reaction with other substances, flammable or corrosive to the electrical equipment, and should be applied in conjunction with applicable electrical requirements of part D, chapter II-1 of the 1983 SOLAS amendments.

2. (1) Electrical installations shall be such as to minimize the risk of fire and explosion from flam mable products. Reference is made to the recommendation published the International Electrotechnical Commission, in particular to publication IEC 60079-1-1 : 2002

   (2) Where the specific cargo is liable to damage the materials normally used in electrical apparatus, due consideration should be given to the particular characteristics of the materials chosen for conductors, insulation, metal parts, etc. As far as necessary, these components should be protected to prevent contact with gases or vapours liable to be encountered.

3. The Society should take appropriate steps to ensure uniformity in the implementation and the application of the provisions of this Section in respect of electrical installations.

4. Electrical equipment, cables and wiring shall not be installed in the hazardous locations unless it conforms with the standards not inferior to those acceptable to the recommendation published the International Electrotechnical Commission, in particular to publication IEC 60079-1-1 : 2002. However, for locations not covered by such standards, electrical equipment, cables and wiring which do not conform to the standards may be installed in hazardous locations based on a risk assessment to the satisfaction of the Society, to ensure that an equivalent level of safety is assured.

5. Where electrical equipment is installed in hazardous locations, as permitted in this Section, it should be to the satisfaction of the Society and certified by the relevent authorities recognized by the Society for operation in the flammable atmosphere concerned, as indicated in column "i" in the table of **Sec 17.** 【See Guidance】

6. For guidance, indication is given if the flashpoint of a substance is in excess of 60°C. In the case of heated cargo, carriage conditions might need to be established and the requirements for cargoes having a flashpoint not exceeding 60°C applied.

1002. Bonding (IBC Code 10.2) 【See Guidance】

Independent cargo tanks should be electrically bonded to the hull. All gasketed cargo pipe joints and hose connections should be electrically bonded.

1003. Electrical requirements for individual products (IBC Code 10.3)

Electrical requirements for individual products are shown in column "i" in the table of **Sec 17.**

Section 11 Fire Protection and Fire Extinction

1101. Application (IBC Code 11.1)

1. The requirements for tankers in chapter II-2 of the 1983 SOLAS amendments shall apply to ships covered by this Chapter, irrespective of tonnage, including ships of less than 500 tons gross tonnages, except that:tons

(1) regulations 10.8 and 10.9 shall not apply
(2) regulation 4.5.1.2 (i.e. the requirements for location of the main cargo control station) need not apply
(3) regulation 10.2, 10.4 and 10.5 shall apply as they would apply to cargo ships of 2,000 tons gross tonnage and over
(4) regulation of 10.5.6 shall apply to ships of 2,000 gross tonnage and over
(5) the provisions of **1103.** shall apply in lieu of regulation 10.8 and
(6) the provisions of **1102.** shall apply in lieu of regulation 10.9.
(7) regulation 4.5.10 shall apply to ships of 500 gross tonnage and over, replacing “hydrocarbon gases” by “flammable vapours” in the regulation; and.
(8) regulations 13.3.4 and 13.4.3 shall apply to ships of 500 gross tonnage and over.

2. Notwithstanding the provisions of **Par 1,** ships engaged solely in the carriage of products which are non-flammable (entry NF in column "i" of the table of minimum requirements) need not comply with the requirements for tanker specified in SOLAS chapter II-2, provided that they comply with the requirements for cargo ships of that chapter, except that regulation 10.7 need not apply to such ships and **1102.** and **1103.** hereunder need not apply.

3. For ships engaged solely in the carriage of products with flashpoint above 60°C (entry "yes" in column "i" of the table of minimum requirements) the requirements of SOLAS chapter II-2 may apply as specified in regulation II-2/1.6.4 in lieu of the provisions of this Section.

4. Monitoring of the concentration of flammable vapour

In lieu of the provisions of SOLAS regulation II-2/1.6.7, the requirements of regulations II-2/4.5.10.1.1 and II-2/4.5.10.1.4 shall apply and a system for continuous monitoring of the concentration of flammable vapours shall be fitted on ships of 500 gross tonnage and over which were constructed before 1 January 2009 by the date of the first scheduled dry-docking after 1 January 2009, but not later than 1 January 2012. Sampling points or detector heads should be located in suitable positions in order that potentially dangerous leakages are readily detected. When the flammable vapour concentration reaches a pre-set level which shall not be higher than 10 % of the lower flammable limit, a continuous audible and visual alarm signal shall be automatically effected in the pump-room and cargo control room to alert personnel to the potential hazard. However, existing monitoring systems already fitted having a pre-set level not greater than 30 % of the lower flammable limit may be accepted. Notwithstanding the above provisions, the Administration may exempt ships not engaged on international voyages from those requirements.

1102. Cargo pump rooms (IBC Code 11.2)

1. The cargo pump room of any ship should be provided with a fixed carbon dioxide fire-extinguishing system as specified in regulation II-2/5.1 and .2 of the 1983 SOLAS amendments. A notice should be exhibited at the controls stating that the system is only to be used for fire-extinguishing and not for inerting purposes, due to the electrostatic ignition hazard. The alarms referred to in regulation II-2/5.1.6 of the 1983 SOLAS amendments should be safe for use in a flammable cargo vapour-air mixture. For the purpose of this requirements, an extinguishing system should be provided which would be suitable for machinery spaces. However, the amount of gas carried should be sufficient to provide a quantity of free gas equal to 45% of the gross volume of the cargo pump room in all cases; or

2. Cargo pump rooms of ships which are dedicated to the carriage of a restricted number of cargoes should be protected by an appropriate fire-extinguishing system approved by the Society.

【See Guidance】

3. A fire-extinguishing system consisting of either a fixed pressure water-spray system or a high-ex-

pansion foam system could be provided for a cargo pump room if cargoes will be carried which are not suited to extinguishment by carbon dioxide or equivalent media. The International Certificate of Fitness for the Carriage of Dangerous Chemicals in Bulk should reflect this conditional requirement.

1103. Cargo area (IBC Code 11.3)

1. Every ship should be provided with a fixed deck foam system in accordance with the requirements of **Pars 2** to **12.** 【See Guidance】

2. Only one type of foam concentrate should be supplied, and it should be effective for the maximum possible number of cargoes intended to be carried. For other cargoes for which foam is not effective or is incompatible, additional arrangements to the satisfaction of the Society should be provided. Regular protein foam should not be used.

3. The arrangements for providing foam should be capable of delivering foam to the entire cargo tanks deck area as well as into any cargo tank, the deck of which is assumed to be ruptured. 【See Guidance】

4. The deck foam system should be capable of simple and rapid operation. The main control station for the system should be suitably located outside of the cargo area, adjacent to the accommodation spaces and readily accessible and operable in the event of fires in the areas protected.

5. The rate of supply of foam solution should be not less than the greatest of the following:

(1) 2 l/min per square metre of the cargo tanks deck area, where cargo tanks deck area means the maximum breadth of the ship times the total longitudinal extent of the cargo tank spaces;

(2) 20 l/min per square metre of the horizontal sectional area of the single tank having the largest such area;

(3) 10 l/min per square metre of the area protected by the largest monitor, such area being entirely forward of the monitor, but not less than 1,250 l/min. For ships of less than 4,000 tonnes deadweight, the minimum capacity of the monitor should be to the satisfaction of the Society. 【See Guidance】

6. Sufficient foam concentrate should be supplied to ensure at least 30 min of foam generation when using the highest of the solution rates stipulated in **5** (1) to (3).

7. Foam from the fixed foam system should be supplied by means of monitors and foam applicators. At least 50 % of the foam rate required in **Par 5.** (1) or (2) should be delivered from each monitor. The capacity of any monitor should be at least 10 l/min of foam solution per square metre of deck area protected by that monitor, such area being entirely forward of the monitor. Such capacity should be not less than 1,250 l/min. For ships of less than 4,000 tonnes deadweight, the minimum capacity of the monitor should be to the satisfaction of the Society. 【See Guidance】

8. The distance from the monitor to the farthest extremity of the protected area forward of that monitor should be not more than 75 % of the monitor throw in still air conditions.

9. A monitor and hose connection for a foam applicator should be situated both port and starboard at the poop front or accommodation spaces facing the cargo area.

10. Applicators should be provided for flexibility of action during fire-fighting operations and to cover areas screened from the monitors. The capacity of any applicator should be not less than 400 l/min and the applicator throw in still air conditions should be not less than 15 m. The number of foam applicators provided should be not less than four. The number and disposition of foam main outlets should be such that foam from at least two applicators can be directed to any part of the cargo tanks deck area.

11. Valves should be provided in the foam main, and in the fire main where this is an integral part of the deck foam system, immediately forward of any monitor position to isolate damaged sections of those mains.

12. Operation of a deck foam system at its required output should permit the simultaneous use of the minimum required number of jets of water at the required pressure from the fire main. 【See Guidance】

13. Ships which are dedicated to the carriage of a restricted number of cargoes should be protected by alternative provisions to the satisfaction of the Society when they are just as effective for the

products concerned as the deck foam system required for the generality of flammable cargoes. 【See Guidance】

14. Suitable portable fire-extinguishing equipment for the products to be carried should be provided and kept in good operating order. 【See Guidance】

15. Where flammable cargoes are to be carried all sources of ignition should be excluded from hazardous locations referred to in **1001. 4**. 【See Guidance】

16. Ships fitted with bow or stern loading and unloading arrangements should be provided with one additional foam monitor meeting the requirements of **Par 7** and one additional applicator meeting the requirements of **Par 10.** The additional monitor should be located to protect the bow or stern loading and unloading arrangements. The area of the cargo line forward or aft of the cargo area should be protected by the above-mentioned applicator.

1104. Special requirements (IBC Code 11.4)

Fire-extinguishing media determined to be effective for certain products are listed in column "I" in the table of **Sec 17.** 【See Guidance】

Section 12 Mechanical Ventilation in the Cargo Area

For ships to which this Chapter applies, the requirements of this Section replace the requirements of SOLAS regulation II-2/ 4.5.2.6 and 4.5.4. However, for products addressed under **1101. 2** and **1101. 3**, except acids and products for which **1517.** applies, SOLAS regulation II-2/4.5.2.6 and 4.5.4 may apply in lieu of the provisions of this Section.

1201. Spaces normally entered during cargo handling operations (IBC Code 12.1) 【See Guidance】

1. Cargo pump rooms and other enclosed spaces which contain cargo handling equipment and similar spaces in which work is performed on the cargo should be fitted with mechanical ventilation systems, capable of being controlled from outside such spaces.

2. Provision should be made to ventilate such spaces prior to entering the compartment and operating the equipment and a warning notice requiring the use of such ventilation should be placed outside the compartment.

3. Mechanical ventilation inlets and outlets should be arranged to ensure sufficient air movement through the space to avoid the accumulation of toxic or flammable vapours or both (taking into account their vapour densities) and to ensure sufficient oxygen to provide a safe working environment, but in no case should the ventilation system have a capacity of less than 30 changes of air per hour based upon the total volume of the space. For certain products, increased ventilation rates for cargo pump rooms are prescribed in **1517.**

4. Ventilation systems should be permanent and should normally be of the extraction type. Extraction from above and below the floor plates should be possible. In rooms housing motors driving cargo pumps, the ventilation should be of the positive pressure type.

5. Ventilation exhaust ducts from spaces within the cargo area should discharge upwards in locations at least 10 m in the horizontal direction from ventilation intakes and openings to accommodation, service and machinery spaces and control stations and other spaces outside the cargo area.

6. Ventilation intakes should be so arranged as to minimize the possibility of recycling hazardous vapours from any ventilation discharge opening.

7. Ventilation ducts should not be led through accommodation, service and machinery spaces or other similar spaces.

8. Electric motors driving fans should be placed outside the ventilation ducts if the carriage of flammable products is intended. Ventilation fans and fan ducts, in way of fans only, for hazardous locations referred to in **Sec 10** should be of non sparking construction defined as:

(1) impellers or housing of nonmetallic construction, due regard being paid to the elimination of static electricity
(2) impellers and housing of nonferrous materials
(3) impellers and housing of austenitic stainless steel and
(4) ferrous impellers and housing with not less than 13 mm design tip clearance.
Any combination of an aluminium or magnesium alloy fixed or rotating component and a ferrous fixed or rotating component, regardless of tip clearance, is considered a sparking hazard and should not be used in these places.

9. Sufficient spare parts should be carried for each type of fan on board, required by this Section.

10. Protection screens of not more than 13 mm square mesh should be fitted in outside openings of ventilation ducts.

1202. Pump rooms and other enclosed spaces normally entered (IBC Code 12.2) 【See Guidance】

Pump rooms and other enclosed spaces normally entered, which are not covered by **1201. 1,** should be fitted with mechanical ventilation systems, capable of being controlled from outside such spaces and complying with the requirements of **1201. 3,** except that the capacity should not be less than 20 changes of air per hour, based upon the total volume of the space. Provision should be made to ventilate such spaces prior to entering.

1203. Spaces not normally entered (IBC Code 12.3) 【See Guidance】

Double bottoms, cofferdams, duct keels, pipe tunnels, hold spaces and other spaces where cargo may accumulate, should be capable of being ventilated to ensure a safe environment when entry into the spaces is necessary. Where a permanent ventilation system is not provided for such spaces, approved means of portable mechanical ventilation should be provided. Where necessary owing to the arrangement of spaces, for instance hold spaces, essential ducting for such ventilation should be permanently installed. For permanent installations, the capacity of 8 air changes per hour should be provided and for portable systems the capacity of 16 air changes per hour. Fans or blowers should be clear of personnel access openings, and should comply with **1201. 8.**

Section 13 Instrumentation

1301. Gauging (IBC Code 13.1)

1. Cargo tanks should be fitted with one of the following types of gauging devices: 【See Guidance】

(1) Open device"which makes use of an opening in the tanks and may expose the gauger to the cargo or its vapour. An example of this is the ullage opening.

(2) Restricted device"which penetrates the tank and which, when in use, permits a small quantity of cargo vapour or liquid to be exposed to the atmosphere. When not in use, the device is completely closed. The design should ensure that no dangerous escape of tank contents (liquid or spray) can take place in opening the device.

(3) Closed device"which penetrates the tank, but which is part of a closed system and keeps tank contents from being released. Examples are the float-type systems, electronic probe, magnetic probe and protected sight glass. Alternatively an indirect device which does not penetrate the tank shell and which is independent of the tank may be used. Examples are weighing of cargo, pipe flow meter.

2. Gauging devices should be independent of the equipment required under **1519.**

3. Open gauging and restricted gauging should be allowed only where:

(1) open venting is allowed by this Chapter; or

(2) means are provided for relieving tank pressure before the gauge is operated.

4. Types of gauging for individual products are shown in column "j" in the table of **Sec 17.**

1302. Vapour detection (IBC Code 13.2)

1. Ships carrying toxic or flammable products or both should be equipped with at least two instruments designed and calibrated for testing for the specific vapours in question. If such instruments are not capable of testing for both toxic concentrations and flammable concentrations, then two separate sets of instruments should be provided.

2. Vapour detection instruments may be portable or fixed. If a fixed system is installed, at least one portable instrument should be provided.

3. When toxic vapour detection equipment is not available for some products which require such detection, as indicated in column "k" in the table of **Sec 17,** the Society may exempt the ship from the requirement, provided an appropriate entry is made on the International Certificate of Fitness for the Carriage of Dangerous Chemicals in Bulk. When granting such an exemption, the Society should recognize the necessity for additional breathing air supply and an entry should be made on the International Certificate of Fitness for the Carriage of Dangerous Chemicals in Bulk drawing attention to the provisions of **1402. 4** and **1604. 2** (2). 【See Guidance】

4. Vapour detection requirements for individual products are shown in column "k" in the table of **Sec 17.**

Section 14 Personnel Protection

1401. Protective equipment (IBC Code 14.1)

1. For the protection of crew members who are engaged in loading and discharging operations, the ship should have on board suitable protective equipment consisting of large aprons, special gloves with long sleeves, suitable footwear, coveralls of chemical-resistant material, and tight-fitting goggles or face shields or both. The protective clothing and equipment should cover all skin so that no part of the body is unprotected. 【See Guidance】

2. Work clothes and protective equipment should be kept in easily accessible places and in special lockers. Such equipment should not be kept within accommodation spaces, with the exception of new, unused equipment and equipment which has not been used since undergoing a thorough cleaning process. The Society may, however, approve storage rooms for such equipment within accommodation spaces if adequately segregated from living spaces such as cabins, passageways dining rooms, bathrooms, etc. 【See Guidance】

3. Protective equipment should be used in any operation which may entail danger to personnel.

1402. Safety equipment (IBC Code 14.2)

1. Ships carrying cargoes for which **1512., 1512. 1** or **3** is listed in column "o" in the table of **Sec 17** shall have on board sufficient but not less than three complete sets of safety equipment each permitting personnel to enter a gas-filled compartment and perform work there for at least 20 min. Such equipment shall be in addition to that required by SOLAS regulation II-2/10.10. 【See Guidance】

2. One complete set of safety equipment should consist of: 【See Guidance】
   (1) one self-contained air-breathing apparatus (not using stored oxygen)
   (2) protective clothing, boots, gloves and tightfitting goggles
   (3) fireproof lifeline with belt resistant to the cargoes carried and
   (4) explosion-proof lamp.

3. For the safety equipment required in **Par 1,** all ships should carry the following, either:
   (1) one set of fully charged spare air bottles for each breathing apparatus;
   (2) a special air compressor suitable for the supply of high-pressure air of the required purity. 【See Guidance】
   (3) a charging manifold capable of dealing with sufficient spare breathing apparatus air bottles for the breathing apparatus; or
   (4) fully charged spare air bottles with a total free air capacity of at least 6,000 l for each breathing apparatus on board in excess of the requirements of SOLAS regulation II-2/10.10.

4. A cargo pump room of ships carrying cargoes which are subject to the requirements of **1518.** or cargoes for which in column "k" in the table of **Sec 17** toxic vapour detection equipment is required but is not available should have either: 【See Guidance】
   (1) a low-pressure line system with hose connections suitable for use with the breathing apparatus required by **Par 1.** This system should provide sufficient high-pressure air capacity to supply, through pressure reduction devices, enough low-pressure air to enable two men to work in a gas-dangerous space for at least 1 h without using the air bottles of the breathing apparatus. Means should be provided for recharging the fixed air bottles and breathing apparatus air bottles from a special air compressor suitable for the supply of high-pressure air of the required purity; or
   (2) an equivalent quantity of spare bottled air in lieu of the low-pressure air line.

5. At least one set of safety equipment as required by **Par 2** should be kept in a suitable clearly marked locker in a readily accessible place near the cargo pump room. The other sets of safety equipment should also be kept in suitable, clearly marked, easily accessible, places.

6. The breathing apparatus should be inspected at least once a month by a responsible officer, and the inspection recorded in the ship's log-book. The equipment should be inspected and tested by an expert at least once a year.

1403. Emergency equipment (IBC Code 14.3)

1. Ships carrying cargoes for which "Yes" is indicated in column "n" of the **Sec 17**, shall be provided with suitable respiratory and eye protection sufficient for every person on board for emergency escape purposes, subject to the following:

(1) filter type respiratory protection is unacceptable

(2) self-contained breathing apparatus shall have normally at least a duration of service of 15 min

(3) emergency escape respiratory protection shall not be used for fire-fighting or cargo handling purposes and shall be marked to that effect.

2. The ships shall have on board medical first-aid equipment including oxygen resuscitation equipment and antidotes for cargoes carried, based on the guidelines developed by IMO. **【See Guidance】**

3. A stretcher which is suitable for hoisting an injured person up from spaces such as the cargo pump room shall be placed in a readily accessible location.

4. Suitably marked decontamination showers and an eyewash shall be available on deck in convenient locations. The showers and eyewash shall be operable in all ambient conditions.

Section 15 Special Requirements

1501. General

The provisions of this Section are applicable where specific reference is made in column "o" in the table of **Sec 17**. These requirements are additional to the general requirements of this Chapter.

1502. Ammonium nitrate solution, 93 % or less (IBC Code 15.2)

1. The ammonium nitrate solution should contain at least 7 % by weight of water. The acidity (pH) of the cargo when diluted with ten parts of water to one part of cargo by weight should be between 5.0 and 7.0. The solution should not contain more than 10 ppm chloride ions, 10 ppm ferric ions, and should be free of other contaminants.
2. Tanks and equipment for ammonium nitrate solution should be independent of tanks and equipment containing other cargoes or combustible products. Equipment which may in service, or when defective, release combustible products into the cargo, e.g. lubricants, should not be used. Tanks should not be used for seawater ballast.
3. Except where expressly approved by the Society, ammonium nitrate solutions should not be transported in tanks which have previously contained other cargoes unless tanks and associated equipment have been cleaned to the satisfaction of the Society.
4. The temperature of the heat exchanging medium in the tank heating system should not exceed 160°C. The heating system should be provided with a control system to keep the cargo at a bulk mean temperature of 140°C. High-temperature alarms at 145°C and 150°C and a low-temperature alarm at 125°C should be provided. Where the temperature of the heat exchanging medium exceeds 160°C an alarm should also be given. Temperature alarms and controls should be located on the navigating bridge. **【See Guidance】**
5. If the bulk mean cargo temperature reaches 145°C, a cargo sample should be diluted with ten parts of distilled or demineralized water to one part of cargo by weight and the acidity (pH) should be determined by means of a narrow range indicator paper or stick. Acidity (pH) measurements should then be taken every 24 h. If the acidity (pH) is found to be below 4.2, ammonia gas should be injected into the cargo until the acidity (pH) of 5.0 is reached.
6. A fixed installation should be provided to inject ammonia gas into the cargo. Controls for this system should be located on the navigating bridge. For this purpose, 300 kg of ammonia per 1,000 tonnes of ammonium nitrate solution should be available on board. **【See Guidance】**
7. Cargo pumps should be of the centrifugal deepwell type or of the centrifugal type with waterflushed seals.
8. Vent piping should be fitted with approved weatherhoods to prevent clogging. Such weatherhoods should be accessible for inspection and cleaning.
9. Hot work on tanks, piping and equipment which have been in contact with ammonium nitrate solution should only be done after all traces of ammonium nitrate have been removed, inside as well as outside.

1503. Carbon disulphide (IBC Code 15.3)

Carbon disulphide may be carried either under water pad or under suitable inert gas pad as specified in the following paragraphs.

Carriage under water pad

1. Provision should be made to maintain a water pad in the cargo tank during loading, unloading and transit. In addition, an inert gas pad should be maintained in the ullage space during transit.
2. All openings should be in the top of the tank, above the deck.
3. Loading lines should terminate near the bottom of the tank.
4. A standard ullage opening should be provided for emergency sounding. **【See Guidance】**
5. Cargo piping and vent lines should be independent of piping and vent lines used for other cargo.

6. Pumps may be used for discharging cargo, provided they are of the deepwell or hydraulically driven submersible types. The means of driving a deepwell pump should not present a source of ignition for carbon disulphide and should not employ equipment that may exceed a temperature of 80°C.

7. If a cargo discharge pump is used, it should be inserted through a cylindrical well extending from the tank top to a point near the tank bottom. A water pad should be formed in this well before attempting pump removal unless the tank has been certified as gas-free.

8. Water or inert gas displacement may be used for discharging cargo, provided the cargo system is designed for the expected pressure and temperature.

9. Safety relief valves should be of stainless steel construction.

10. Because of its low ignition temperature and close clearances required to arrest its flame propagation, only intrinsically safe systems and circuits are permitted in the hazardous locations **1002. 3.** *(2021)*

Carriage under suitable inert gas pad

11. Carbon disulphide should be carried in independent tanks with a design pressure of not less than 0.06 MPa gauge.

12. All openings should be located on the top of the tank, above the deck.

13. Gaskets used in the containment system should be of a material which does not react with, or dissolve in, carbon disulphide.

14. Threaded joints should not be permitted in the cargo containment system, including the vapour lines.

15. Prior to loading, the tank(s) should be inerted with suitable inert gas until the oxygen level is 2 % by volume or lower. Means should be provided to automatically maintain a positive pressure in the tank using suitable inert gas during loading, transport and discharge. The system should be able to maintain this positive pressure between 0.01 and 0.02 MPa gauge, and should be remotely monitored and fitted with over/underpressure alarms.

16. Hold spaces surrounding an independent tank carrying carbon disulphide should be inerted by a suitable inert gas until the oxygen level is 2 % or less. Means should be provided to monitor and maintain this condition throughout the voyage. Means should also be provided to sample these spaces for carbon disulphide vapour.

17. Carbon disulphide should be loaded, transported and discharged in such a manner that venting to the atmosphere does not occur. If carbon disulphide vapour is returned to shore during loading or to the ship during discharge, the vapour return system should be independent of all other containment systems.

18. Carbon disulphide should be discharged only by submerged deepwell pumps or by a suitable inert gas displacement. The submerged deepwell pumps should be operated in a way that prevents heat build-up in the pump. The pump should also be equipped with a temperature sensor in the pump housing with remote readout and alarm in the cargo control room. The alarm should be set at 80°C. The pump should also be fitted with an automatic shut-down device, if the tank pressure falls below atmospheric pressure during the discharge.

19. Air should not be allowed to enter the cargo tank, cargo pump or lines while carbon disulphide is contained in the system.

20. No other cargo handling, tank cleaning or deballasting should take place concurrent with loading or discharge of carbon disulphide.

21. A water spray system of sufficient capacity should be provided to blanket effectively the area surrounding the loading manifold, the exposed deck piping associated with product handling and the tank domes. The arrangement of piping and nozzles should be such as to give an uniform distribution rate of 10 $l/m^2/min$. Remote manual operation should be arranged such that remote starting of pumps supplying the water-spray system and remote operation of any normally closed valves in the system can be carried out from a suitable location outside the cargo area adjacent to the accommodation spaces and readily accessible and operable in the event of fire in the areas protected. The water-spray system should be capable of both local and remote manual operation,

and the arrangement should ensure that any spilled cargo is washed away. Additionally, a water hose with pressure to the nozzle when atmospheric temperature permits, should be connected ready for immediate use during loading and unloading operations.

22. No cargo tanks should be more than 98 % liquid-full at the reference temperature (R).

23. The maximum volume (V_L) of cargo to be loaded in a tank should be:

$$V_L = 0.98\, V\rho_R/\rho_L$$

where:

V_L : volume of the tank

ρ_R : relative density of cargo at the reference temperature (R)

ρ_L : relative density of cargo at the loading temperature

R : reference temperature, i.e. the temperature at which the vapour pressure of the cargo corresponds to the set pressure of the pressure relief valve.

24. The maximum allowable tank filling limits for each cargo tank should be indicated for each loading temperature which may be applied, and for the applicable maximum reference temperature, on a list approved by the Administration. A copy of the list should be permanently kept on board by the master.

25. Zones on open deck, or semi-enclosed spaces on open deck within three metres of a tank outlet, gas or vapour outlet, cargo pipe flange or cargo valve of a tank certified to carry carbon disulphide, should comply with the electrical equipment requirements specified for carbon disulphide in column "i" in the table of **Sec 17.** Also, within the specified zone, no other heat sources, like steam piping with surface temperatures in excess of 80°C should be allowed.

26. Means should be provided to ullage and sample the cargo without opening the tank or disturbing the positive suitable inert gas blanket.

27. The product should be transported only in accordance with a cargo handling plan that has been approved by the Administration. Cargo handling plans should show the entire cargo piping system. A copy of the approved cargo handling plan should be available on board. The International Certificate of Fitness for the Carriage of Dangerous Chemicals in Bulk should be endorsed to include reference to the approved cargo handling plan.

1504. Diethyl ether (IBC Code 15.4)

1. Unless inerted, natural ventilation should be provided for the voids around the cargo tanks while the vessel is under way. If a mechanical ventilation system is installed, all blowers should be of non-sparking construction. Mechanical ventilation equipment should not be located in the void spaces surrounding the cargo tanks.

2. Pressure relief valve settings should not be less than 0.02 MPa gauge for gravity tanks.

3. Inert gas displacement may be used for discharging cargo from pressure tanks provided the cargo system is designed for the expected pressure.

4. In view of the fire hazard, provision should be made to avoid any ignition source or heat generation or both in the cargo area.

5. Pumps may be used for discharging cargo, provided that they are of a type designed to avoid liquid pressure against the shaft gland or are of a hydraulically operated submerged type and are suitable for use with the cargo.

6. Provision should be made to maintain the inert gas pad in the cargo tank during loading, unloading and transit.

1505. Hydrogen peroxide solutions (IBC Code 15.5)

1. Hydrogen peroxide solutions over 60 % but not over 70 %

(1) Hydrogen peroxide solutions over 60 % but not over 70 % should be carried in dedicated ships only and no other cargoes should be carried.

(2) Cargo tanks and associated equipment should be either pure aluminium (99.5 %) or solid stainless steel (304 L, 316, 316 L or 316 Ti), and passivated in accordance with approved procedures. Aluminium should not be used for piping on deck. All nonmetallic materials of construction for the containment system should neither be attacked by hydrogen peroxide nor contribute to its decomposition.

(3) Pump rooms should not be used for cargo transfer operations.

(4) Cargo tanks should be separated by cofferdams from oil fuel tanks or any other space containing flammable or combustible materials.

(5) Tanks intended for the carriage of hydrogen peroxide should not be used for seawater ballast.

(6) Temperature sensors should be installed at the top and bottom of the tank. Remote temperature readouts and continuous monitoring should be located on the navigating bridge. If the temperature in the tanks rises above 35°C, visible and audible alarms should be activated on the navigating bridge.

(7) Fixed oxygen monitors (or gas sampling lines) should be provided in void spaces adjacent to tanks to detect leakage of the cargo into these spaces. Remote readouts, continuous monitoring (if gas-sampling lines are used, intermittent sampling is satisfactory) and visible and audible alarms similar to those for the temperature sensors should also be located on the navigating bridge. The visible and audible alarms should be activated if the oxygen concentration in these void spaces exceeds 30 % by volume. Two portable oxygen monitors should also be available as back-up systems.

(8) As a safeguard against uncontrolled decomposition, a cargo jettisoning system should be installed to discharge the cargo overboard. The cargo should be jettisoned if the temperature rise of the cargo exceeds a rate of 2°C per hour over a 5 h period or when the temperature in the tank exceeds 40°C.

(9) Cargo tank venting systems should have pressure/vacuum relief valves for normal controlled venting, and rupture discs or a similar device for emergency venting, should tank pressure rise rapidly as a result of uncontrolled decomposition. Rupture discs should be sized on the basis of tank design pressure, tank size and anticipated decomposition rate.

(10) A fixed water-spray system should be provided for diluting and washing away any concentrated hydrogen peroxide solution spilled on deck. The areas covered by the water-spray should include the manifold/hose connections and the tank tops of those tanks designated for carrying hydrogen peroxide solutions. The minimum application rate should satisfy the following criteria:

(a) The product should be diluted from the original concentration to 35 % by weight within 5 min of the spill.

(b) The rate and estimated size of the spill should be based upon maximum anticipated loading and discharge rates, the time required to stop flow of cargo in the vent of tank overfill or a piping/hose failure, and the time necessary to begin application of dilution water with actuation at the cargo control location or on the navigating bridge. **【See Guidance】**

(11) Only those hydrogen peroxide solutions which have a maximum decomposition rate of 1 % per year at 25°C should be carried. Certification from the shipper that the product meets this standard should be presented to the master and kept on board. A technical representative of the manufacturer should be on board to monitor the transfer operations and have the capability tc test the stability of the peroxide. He should certify to the master that the cargo has been loaded in a stable condition.

(12) Protective clothing that is resistant to hydrogen peroxide solutions should be provided for each crew member involved in cargo transfer operations. Protective clothing should include nonflammable coveralls, suitable gloves, boots and eye protection.

2. Hydrogen peroxide solutions over 8 % but not over 60 % by weight

(1) The ship's shell plating should not form any boundaries of tanks containing this product.

(2) Hydrogen peroxide should be carried in tanks thoroughly and effectively cleaned of all traces of previous cargoes and their vapours or ballast. Procedures for inspection, cleaning, passivation and loading of tanks should be in accordance with MSC/Circ. 394. A certificate should be on board the vessel indicating that the procedures in the circular have been followed. The passivation re-

quirement may be waived by the Society for domestic shipments of short duration. Particular care in this respect is essential to ensure the safe carriage of hydrogen peroxide.

(a) When hydrogen peroxide is carried no other cargoes should be carried simultaneously.

(b) Tanks which have contained hydrogen peroxide may be used for other cargoes after cleaning in accordance with the procedures outlined in MSC/Circ. 394.

(c) Consideration in design should provide minimum internal tank structure, free draining, no entrapment and ease of visual inspection.

(3) Cargo tanks and associated equipment should be either pure aluminium (99.5 %) or solid stainless steel of types suitable for use with hydrogen peroxide (e.g. 304, 304 L, 316, 316 L, 316 Ti). Aluminium should not be used for piping on deck. All nonmetallic materials of construction for the containment system should neither be attacked by hydrogen peroxide nor contribute to its decomposition.

(4) Cargo tanks should be separated by a cofferdam from fuel oil tanks or any other space containing materials incompatible with hydrogen peroxide.

(5) Temperature sensors should be installed at the top and bottom of the tank. Remote temperature readouts and continuous monitoring should be located on the navigating bridge. If the temperature in the tank rises above 35°C, visible and audible alarms should activate on the navigating bridge.

(6) Fixed oxygen monitors (or gas-sampling lines) should be provided in void spaces adjacent to tanks to detect leakage of the cargo into these spaces. The enhancement of flammability by oxygen enrichments should be recognized. Remote readouts, continuous monitoring (if gas-sampling lines are used, intermittent sampling is satisfactory) and visible and audible alarms similar to those for the temperature sensors should also be located on the navigating bridge. The visible and audible alarms should activate if the oxygen concentration in these void spaces exceeds 30 % by volume. Two portable oxygen monitors should also be available as back-up systems.

(7) As a safeguard against uncontrolled decomposition, a cargo jettisoning system should be installed to discharge the cargo overboard. The cargo should be jettisoned if the temperature rise of the cargo exceeds a rate of 2°C per hour over a five-hour period or when the temperature in the tank exceeds 40°C.

(8) Cargo tank venting systems with filtration should have pressure/vacuum relief valves for normal controlled venting, and a device for emergency venting, should have for tank pressure rise rapidly as a result of an uncontrolled decomposition rate, as stipulated in (7). These venting systems should be designed in such a manner that there is no introduction of seawater into the cargo tank even under heavy sea conditions. Emergency venting should be sized on the basis of tank design pressure and tank size.

(9) A fixed water-spray system should be provided for diluting and washing away any concentrated solution spilled on deck. The areas covered by the water-spray should include the manifold/hose connections and the tank tops of those tanks designated for the carriage of hydrogen peroxide solutions. The minimum application rate should satisfy the following criteria:

(a) The product should be diluted from the original concentration to 35 % by weight within 5 minutes of the spill.

(b) The rate and estimated size of the spill should be based upon maximum anticipated loading and discharge rates, the time required to stop flow of the cargo in the event of tank overfill or a piping/hose failure, and the time necessary to begin application of dilution water with actuation at the cargo control location or on the navigating bridge.

(10) Only those hydrogen peroxide solutions which have a maximum decomposition rate of 1 % per year at 25°C should be carried. Certification from the shipper that the product meets this standard should be presented to the master and kept on board. A technical representative of the manufacturer should be on board to monitor the transfer operations and have the capability to test the stability of the hydrogen peroxide. He should certify to the master that the cargo has been loaded in a stable condition.

(11) Protective clothing that is resistant to hydrogen peroxide should be provided for each crew member involved in cargo transfer operations. Protective clothing should include coveralls that are nonflammable, suitable gloves, boots and eye protection.

(12) During transfer of hydrogen peroxide the related piping system should be separated from all other systems. Cargo hoses used for transfer of hydrogen peroxide should be marked "FOR HYDROGEN PEROXIDE TRANSFER ONLY".

3. Procedures for inspection, cleaning, passivation and loading of tanks for the carriage of hydrogen peroxide solutions 8-60%, which have contained other cargoes, or for the carriage of other cargoes after carriage of hydrogen peroxide.

(1) Tanks having contained cargoes other than hydrogen peroxide shall be inspected, cleaned and passivated before re-use for the transport of hydrogen peroxide solutions. The procedures for inspection and cleaning, as given in paragraphs (2) to (8) below, apply to both stainless steel and pure aluminium tanks (see paragraph 2.(2)). Procedures for passivation are given in paragraph (9) for stainless steel and (10) for aluminium. Unless otherwise specified, all steps apply to the tanks and to all associated equipment having been in contact with the other cargo.

(2) After unloading the previous cargo the tank shall be rendered safe and inspected for any residues, scale and rust.

(3) Tanks and associated equipment shall be washed with clean filtered water. The water to be used shall at least have the quality of potable water with a low chlorine content.

(4) Trace residues and vapours of the previous cargo shall be removed by steaming of tank and equipment.

(5) Tank and equipment are washed again with clean water (quality as above) and dried, using filtered, oil-free air.

(6) The atmosphere in the tank shall be sampled and investigated for the presence of organic vapours and oxygen concentration.

(7) The tank shall be checked again by visual inspection for residues of the previous cargo, scale and rust as well as for any smell of the previous cargo.

(8) If inspection or measurements indicate the presence of residues of the previous cargo or its vapours, actions described in paragraphs (3) to (5) shall be repeated.

(9) Tank and equipment made from stainless steel which have contained other cargoes than hydrogen peroxide or which have been under repair shall be cleaned and passivated, regardless of any previous passivation, according to the following procedure:

(a) New welds and other repaired parts shall be cleaned and finished using stainless steel wire brush, chisel, sandpaper or buff. Rough surfaces shall be given a smooth finish. A final polishing is necessary.

(b) Fatty and oily residues shall be removed by the use of appropriate organic solvents or detergent solutions in water. The use of chlorine-containing compounds shall be avoided as they can seriously interfere with passivation.

(c) The residues of the degreasing agent shall be removed, followed by a washing with water.

(d) In the next step, scale and rust shall be removed by the application of acid (e.g. a mixture of nitric and hydrofluoric acids), followed again by a washing with clean water.

(e) All the metal surfaces which can come into contact with hydrogen peroxide shall be passivated by the application of nitric acid of a concentration between 10 and 35% by mass. The nitric acid must be free from heavy metals, other oxidizing agents or hydrogen fluoride. The passivation process shall continue for 8 to 24 h, depending upon the concentration of acid, the ambient temperature and other factors. During this time a continuous contact between the surfaces to be passivated and the nitric acid shall be ensured. In the case of large surfaces this may be achieved by recirculating the acid. Hydrogen gas may be evolved in the passivation process, leading to the presence of an explosive atmosphere in the tanks. Therefore, appropriate measures must be taken to avoid the build-up or the ignition of such an atmosphere.

(f) After passivation the surfaces shall be thoroughly washed with clean filtered water. The washing process shall be repeated until the effluent water has the same pH value as the incoming water.

(g) Surfaces treated according to the above steps may cause some decomposition when coming into contact with hydrogen peroxide for the first time. This decomposition will cease after a short time (usually within two or three days). Therefore an additional flushing with hydrogen peroxide for a period of at least two days is recommended.

(h) Only degreasing agents and acid cleaning agents which have been recommended for this purpose by the manufacturer of the hydrogen peroxide shall be used in the process.

(10) Tanks and equipment made from aluminium and which have contained cargoes other than hydrogen peroxide, or which have been under repair, shall be cleaned and passivated. The following is an example of a recommended procedure:

(a) The tank shall be washed with a solution of a sulphonated detergent in hot water, followed by a washing with water.

(b) The surface shall then be treated for 15 to 20 min with a solution of sodium hydroxide of a concentration of 7% by mass or treated for a longer period with a less concentrated solution (e.g. for 12 h with 0.4 to 0.5% sodium hydroxide). To prevent excessive corrosion at the bottom of the tank when treating with more concentrated solutions of sodium hydroxide, water shall be added continuously to dilute the sodium hydroxide solution which collects there.

(c) The tank shall be thoroughly washed with clean, filtered water. As soon as possible after washing, the surface shall be passivated by the application of nitric acid of a concentration between 30 and 35% by mass. The passivation process shall continue for 16 to 24 h. During this time a continuous contact between the surfaces to be passivated and the nitric acid shall be ensured.

(d) After passivation the surfaces shall be thoroughly washed with clean, filtered water. The washing process shall be repeated until the effluent water has the same pH value as the incoming water.

(e) A visual inspection shall be made to ensure that all surfaces have been treated. It is recommended that an additional flushing is carried out for a minimum of 24 h with dilute hydrogen peroxide solution of a concentration approximately 3% by mass.

(11) The concentration and stability of the hydrogen peroxide solution to be loaded shall be determined.

(12) The hydrogen peroxide is loaded under intermittent visual supervision of the interior of the tank from an appropriate opening.

(13) If substantial bubbling is observed which does not disappear within 15 min after the completion of loading, the contents of the tank shall be unloaded and disposed of in an environmentally safe manner. The tank and equipment shall then be repassivated as described above.

(14) The concentration and stability of the hydrogen peroxide solution shall be determined again. If the same values are obtained within the limits of error as in paragraph (10), the tank is considered to be properly passivated and the cargo ready for shipment.

(15) Actions described in paragraphs (2) to (8) shall be carried out under the supervision of the master or shipper. Actions described in paragraphs (9) to (15) shall be carried out under the on-site supervision and responsibility of a representative of the hydrogen peroxide manufacturer or under supervision and responsibility of another person familiar with the safety-relevant properties of hydrogen peroxide.

(16) The following procedure shall be applied when tanks having contained hydrogen peroxide solution are to be used for other products (unless otherwise specified, all steps apply to the tanks and to all associated equipment having been in contact with hydrogen peroxide):

(a) Hydrogen peroxide cargo residue shall be drained as completely as possible from tanks and equipment.

(b) Tanks and equipment shall be rinsed with clean water, and subsequently thoroughly washed with clean water.

(c) The interior of the tank shall be dried and inspected for any residues. Steps (a) to (c) in (16), shall be carried out under the supervision of the master or the shipper. Step (c) in paragraph (16) shall be carried out by a person familiar with the safety-relevant properties of the chemical to be transported and of hydrogen peroxide.

SPECIAL CAUTIONS :

(1) Hydrogen peroxide decomposition may enrich the atmosphere with oxygen and appropriate precautions shall be observed.

(2) Hydrogen gas may be evolved in the passivation processes described in paragraphs (9) (e), (10) (b) and (10) (d), leading to the presence of an explosive atmosphere in the tank. Therefore, appropriate measures must be taken to avoid the build-up or the ignition of such an atmosphere.

1506. Motor fuel anti-knock compounds (containing lead alkyls) (IBC Code 15.6)

1. Tanks used for these cargoes should not be used for the transportation of any other cargo except those commodities to be used in the manufacturer of motor fuel anti-knock compounds containing lead alkyls.

2. If a cargo pump room is located on deck level according to **1518.**, the ventilation arrangements should be in compliance with **1517.**

3. Entry into cargo tanks used for the transportation of these cargoes is not permitted unless approved by the Society.

4. Air analysis should be made for lead content to determine if the atmosphere is satisfactory prior to allowing personnel to enter the cargo pump room or void spaces surrounding the cargo tank.

1507. Phosphorus, yellow or white (IBC Code 15.7)

1. Phosphorus should, at all times, be loaded, carried and discharged under a water pad of 760 mm minimum depth. During discharge operations, arrangements should be made to ensure that water occupies the volume of phosphorus discharged. Any water discharged from a phosphorus tank should be returned only to a shore installation.

2. Tanks should be designed and tested to a minimum equivalent water head of 2.4 m above the top of the tank, under designed loading conditions, taking into account the depth, relative density and method of loading and discharge of the phosphorus.

3. Tanks should be so designed as to minimize the interfacial area between the liquid phosphorus and its water pad.

4. A minimum ullage space of 1 % should be maintained above the water pad. The ullage space should be filled with inert gas or naturally ventilated by two cowled standpipes terminating at different heights but at least 6 m above the deck and at least 2 m above the pump house top.

5. All openings should be at the top of cargo tanks, and fittings and joints attached thereto should be of materials resistant to phosphorus pentoxide.

6. Phosphorus should be loaded at a temperature not exceeding 60°C.

7. Tank heating arrangements should be external to tank and have a suitable method of temperature control to ensure that the temperature of the phosphorus does not exceed 60°C. A high-temperature alarm should be fitted.

8. A water drench system acceptable to the Society should be installed in all void spaces surrounding the tanks. The system should operate automaticatly in the event of an escape of phosphorus.

9. Void spaces referred to in **Par 8** should be provided with effective means of mechanical ventilation which should be capable of being sealed off quickly in an emergency.

10. Loading and discharge of phosphorus should be governed by a central system on the ship which, in addition to incorporating high-level alarms, should ensure that no overflow of tanks is possible and that such operations can be stopped quickly in an emergency from either ship or shore.

11. During cargo transfer, a water hose on deck should be connected to a water supply and kept flowing throughout the operation so that any spillage of phosphorus may be washed down with water immediately.

12. Ship-to-shore loading and discharge connections should be of a type approved by the Society.

1508. Propylene oxide and mixtures of ethylene oxide/propylene oxide with an ethylene oxide content of not more than 30 % by weight (IBC Code 15.8)

1. Products transported under the provisions of this Article should be acetylene-free.

2. Unless cargo tanks are properly cleaned, these products should not be carried in tanks which have contained as one of the three previous cargoes any products known to catalyse polymerization, such as:

   (1) mineral acids (e.g. sulphuric, hydrochloric, nitric)
   (2) carboxylic acids and anhydrides (e.g. formic, acetic)
   (3) halogenated carboxylic acids (e.g. chloracetic)
   (4) sulphonic acids (e.g. benzene sulphonic)
   (5) caustic alkalis (e.g. sodium hydroxide, potassium hydroxide)
   (6) ammonia and ammonia solutions
   (7) amines and amine solutions

(8) oxidizing substances.

3. Before loading, tanks should be thoroughly and effectively cleaned, to remove all traces of previous cargoes from tanks and associated pipework, except where the immediately prior cargo has been propylene oxide or ethylene oxide/propylene oxide mixtures. Particular care should be taken in the case of ammonia in tanks made of steel other than stainless steel.

4. In all cases, the effectiveness of cleaning procedures for tanks and associated pipework should be checked by suitable testing or inspection to ascertain that no traces of acidic or alkaline materials remain that might create a hazardous situation in the presence of these products.

5. Tanks should be entered and inspected prior to each initial loading of these products to ensure freedom from contamination, heavy rust deposits and visible structural defects. When cargo tanks are in continuous service for these products, such inspections should be performed at intervals of not more than 2 years.

6. Tanks for the carriage of these products should be of steel or stainless steel construction.

7. Tanks for the carriage of these products may be used for other cargoes after thorough cleaning of tanks and associated pipework systems by washing or purging.

8. All valves, flanges, fittings and accessory equipment should be of a type suitable for use with the products and should be constructed of steel or stainless steel in accordance with recognized standards. Discs or disc faces, seats and other wearing parts of valves should be made of stainless steel containing not less than 11 % chromium.

9. Gaskets should be constructed of materials which do not react with, dissolve in, or lower the auto-ignition temperature of these products and which are fire-resistant and possess adequate mechanical behaviour. The surface presented to the cargo should be polytetrafluoroethylene (PTFE), or materials giving a similar degree of safety by their inertness. Spirally wound stainless steel with a filler of PTFE or similar fluorinated polymer may be accepted.

10. Insulation and packing, if used, should be of a material which does not react with, dissolve in, or lower the autoignition temperature of these products.

11. The following materials and generally found unsatisfactory for gaskets, packing and similar uses in containment systems for these products and would require testing before being approved by the Society:

(1) Neoprene or nature rubber, if it comes into contact with the products.
(2) Asbestos, or binders used with asbestos.
(3) Materials containing oxides of magnesium, such as mineral wools.

12. Threaded joints should not be permitted in the cargo liquid and vapour lines.

13. Filling and discharge piping should extend to within 100 mm of the bottom of the tank or any sump pit.

14.1 The containment system for a tank containing these products should have a valved vapour return connection.

14.2 The products should be loaded and discharged in such a manner that venting of the tanks to atmosphere does not occur. If vapour return to shore is used during tank loading, the vapour return system connected to a containment system for the product should be independent of all other containment systems.

14.3 During discharge operations, the pressure in the cargo tank should be maintained above 0.007 MPa gauge.

15. Tanks carrying these products should be vented independently of tanks carrying other products. Facilities should be provided for sampling the tank contents without opening the tank to atmosphere.

16. The cargo should be discharged only by deepwell pumps, hydraulically operated submerged pumps, or inert gas displacement. Each cargo pump should be arranged to ensure that the product does not heat significantly if the discharge line from the pump is shut off or otherwise blocked.

17. Cargo hoses used for transfer of these products should be marked **"FOR ALKYLENE OXIDE TRANSFER ONLY".**

18. Cargo tanks, void spaces and other enclosed spaces, adjacent to an integral gravity cargo tank carrying propylene oxide, should either contain a compatible cargo (those cargoes specified in **Par 2** are examples of substances considered incompatible) or be inerted by injection of a suitable inert gas. Any hold space in which an independent cargo tank is located should be inerted. Such inerted spaces and tanks should be monitored for these products and oxygen. Portable sampling equipment is satisfactory. The oxygen content of these spaces should be maintained below 2 %.

19. In no case should air be allowed to enter the cargo pump or piping system while these products are contained within the system.

20. Prior to disconnecting shore-lines, the pressure in liquid and vapour lines should be relieved through suitable valves installed at the loading header. Liquid and vapour from these lines should not be discharged to atmosphere.

21. Propylene oxide may be carried in pressure tanks or in independent or integral gravity tanks. Ethylene oxide/propylene oxide mixtures should be carried in independent gravity tanks or pressure tanks. Tanks should be designed for the maximum pressure expected to be encountered during loading, conveying and discharging cargo.

22.1 Tanks for the carriage of propylene oxide with a design pressure less than 0.06 MPa gauge and tanks for the carriage of ethylene oxide/propylene oxide mixtures with a design pressure less than 0.12 MPa gauge should have a cooling system to maintain the cargo below the reference temperature.

22.2 The refrigeration requirement for tanks with a design pressure less than 0.06 MPa gauge may be waived by the Society for ships operating in restricted areas or on voyages of restricted duration, and account may be taken in such cases of any insulation of the tanks. The area and times of year for which such carriage would be permitted should be included in the conditions of carriage on the International Certificate of Fitness for the Carriage of Dangerous Chemicals in Bulk.

23.1 Any cooling system should maintain the liquid temperature below the boiling temperature at the containment pressure. At least two complete cooling plants automatically regulated by variations within the tanks should be provided. Each cooling plant should be complete with the necessary auxiliaries for proper operation. The control system should also be capable of being manually operated. An alarm should be provided to indicate malfunctioning of the temperature controls. The capacity of each cooling system should be sufficient to maintain the temperature of the liquid cargo below the reference temperature of the system.

23.2 An alternative arrangement may consist of three cooling plants, any two of which should be sufficient to maintain the liquid temperatures below the reference temperature.

23.3 Cooling media which are separated from the products by a single wall only should be nonreactive with the products.

23.4 Cooling systems requiring compression of the products should not be used.

24. Pressure relief valve settings should not be less than 0.02 MPa gauge and for pressure tanks not greater than 0.7 MPa gauge for the carriage of propylene oxide and not greater than 0.53 MPa gauge for the carriage of propylene oxide/ethylene oxide mixtures.

25.1 The piping system for tanks to be loaded with these products are to be separated (as defined in **301. 4**) from piping systems for all other tanks, including empty tanks. If the piping system for the tanks to be loaded is not independent (as defined in **106. 18**), the required piping separation are to be accomplished by the removal of spool-pieces, valves, or other pipe section and the installation of blank flanges at these locations. The required separation applies to all liquid and vapour piping, liquid and vapour vent lines and any other possible connections, such as common inert-gas supply lines. *(2021)*

25.2 These products may be transported only in accordance with cargo handling plans that have been approved by the Society. Each intended loading arrangement should be shown on a separate cargo handling plan. Cargo handling plans should show the entire cargo piping system and the locations for installation of blank flanges needed to meet the above piping separation requirements. A copy of each approved cargo handling plan should be maintained on board the ship. The International Certificate of Fitness for the Carriage of Dangerous Chemicals in Bulk should be endorsed to include reference to the approved cargo handling plans.

25.3 Before each initial loading of these products and before every subsequent return to such service, certification verifying that the required piping separation has been achieved should be obtained from a responsible person acceptable to the port Administration and carried on board the ship. Each connection between a blank flange and a pipeline flange should be fitted with a wire and seal by the responsible person to ensure that inadvertent removal of the blank flange is impossible.

26.1 No cargo tanks should be more than 98 % liquid-full at the reference temperature.

26.2 The maximum volume (V_L) of cargo to be loaded in a tank should be:

$$V_L = 0.98\, V \frac{\rho_R}{\rho_L}$$

where

V = volume of the tank

ρ_R = relative density of cargo at the reference temperature.

ρ_L = relative density of cargo at the loading temperature and pressure.

26.3 The maximum allowable tank filling limits for each cargo tank should be indicated for each loading temperature which may be applied, and for the applicable maximum reference temperature, on a list to be approved by the Society. A copy of the list should be permanently kept on board by the master.

27. The cargo should be carried under a suitable protective padding of nitrogen gas. An automatic nitrogen make-up system should be installed to prevent the tank pressure falling below 0.07 MPa gauge in the event of product temperature fall due to ambient conditions or maloperation of refrigeration systems. Sufficient nitrogen should be available on board to satisfy the demand of the automatic pressure control. Nitrogen of commercially pure quality (99.9 % by volume) should be used for padding. A battery of nitrogen bottles connected to the cargo tanks through a pressure reduction valve satisfies the intention of the expression "automatic" in this context. **【See Guidance】**

28. The cargo tank vapour space should be tested prior to and after loading to ensure that the oxygen content is 2 % by volume or less.

29. A water-spray system of sufficient capacity should be provided to blanket effectively the area surrounding the loading manifold, the exposed deck piping associated with product handling and the tank domes. The arrangement of piping and nozzles should be such as to give a uniform distribution rate of 10 l/min per square metre. Remote manual operation should be arranged such that remote starting of pumps supplying the water- spray system and remote operation of any normally closed valves in the system can be carried out from a suitable location outside the cargo area, adjacent to the accommodation spaces and readily accessible and operable in the event of fire in the areas protected. The water-spray system should be capable of both local and remote manual operation and the arrangement should ensure that any spilled cargo is washed away. Additionally, a water hose with pressure to the nozzle, when atmospheric temperatures permit, should be connected ready for immediate use during loading and unloading operations.

30. A remotely operated, controlled closing-rate, shutoff valve should be provided at each cargo hose connection used during cargo transfer.

1509. Sodium chlorate solution, 50 % or less (IBC Code 15.9)

1. Tanks and associated equipment which have contained this product may be used for other cargoes after thorough cleaning by washing or purging.

2. In the event of spillage of this product, all spilled liquid should be thoroughly washed away without delay. To minimize fire risk, spillage should not be allowed to dry out.

1510. Sulphur, Molten (IBC Code 15.10) 【See Guidance】

1. Cargo tank ventilation should be provided to maintain the concentration of hydrogen sulphide below one half of its lower explosive limit throughout the cargo tank vapour space for all conditions of carriage, i.e. below 1.85 % by volume.
2. Where mechanical ventilation systems are used for maintaining low gas concentrations in cargo tanks, an alarm system should be provided to give warning if the system fails.
3. Ventilation systems should be so designed and arranged as to preclude depositing of sulphur within the system.
4. Openings to void spaces adjacent to cargo tanks should be so designed and fitted as to prevent the entry of water, sulphur or cargo vapour.
5. Connections should be provided to permit sampling and analysing of vapour in void spaces.
6. Cargo temperature controls should be provided to ensure that the temperature of the sulphur does not exceed 155°C. 【See Guidance】
7. Sulphur (molten) has a flashpoint above 60°C : however, electrical equipment shall be certificated safe for gases evolved.

1511. Acids (IBC Code 15.11)

1. The ship's shell plating should not form any boundaries of tanks containing mineral acids.
2. Proposals for lining steel tanks and related piping systems with corrosion-resistant materials may be considered by the Society. The elasticity of the lining should not be less than that of the supporting boundary plating. 【See Guidance】
3. Unless constructed wholly of corrosion-resistant materials or fitted with an approved lining, the plating thickness should take into account the corrosivity of the cargo.
4. Flanges of the loading and discharge manifold connections should be provided with shields, which may be portable, to guard against the danger of the cargo being sprayed; and in addition, drip trays should also be provided to guard against leakage on to the deck. 【See Guidance】
5. Because of the danger of evolution of hydrogen when these substances are being carried, the electrical arrangements should comply with **1001. 4**. The certified safe type equipment should be suitable for use in hydrogen-air mixtures. Other sources of ignition should not be permitted in such spaces.
6. Substances subjected to the requirements of this Article should be segregated from oil fuel tanks, in addition to the segregation requirements in **301. 1**. 【See Guidance】
7. Provision should be made for suitable apparatus to detect leakage of cargo into adjacent spaces. 【See Guidance】
8. The cargo pump room bilge pumping and drainage arrangements should be of corrosion-resistant materials. 【See Guidance】

1512. Toxic products (IBC Code 15.12)

1. Exhaust openings of tank vent systems should be located:
   (1) at a height of $B/3$ or 6 m, whichever is greater, above the weather deck or, in the case of a deck tank, the access gangway
   (2) not less than 6 m above the fore-and-aft gangway, if fitted within 6 m of the gangway and
   (3) 15 m from any opening or air intake to any accommodation and service spaces
   (4) the vent height may be reduced to 3 m above the deck or fore-and-aft gangway, as applicable, provided high-velocity vent valves of a type approved by the Society, directing the vapour-air mixture upwards in an unimpeded jet with an exit velocity of at least 30 m/s, are fitted.
2. Tank venting systems should be provided with a connection for a vapour return line to the shore installation. 【See Guidance】
3. Products should:

(1) not be stowed adjacent to oil fuel tanks
(2) have separate piping systems and
(3) have tank vent systems separate from tanks containing nontoxic products. (see also **307. 2**)

4. Cargo tank relief valve settings should be a minimum of 0.02 MPa gauge.

1513. Cargoes protected by additives (IBC Code 15.13)

1. Certain cargoes with a reference in column "o" in the table of **Sec 17** by the nature of their chemical make-up, tend, under certain conditions of temperature, exposure to air or contact with a catalyst, to undergo polymerization, decomposition, oxidation or other chemical changes. Mitigation of this tendency is carried out by introducing small amounts of chemical additives into the liquid cargo or by controlling the cargo tank environment.

2. Ships carrying these cargoes should be so designed as to eliminate from the cargo tanks and cargo handling system any material of construction or contaminants which could act as a catalyst or destroy the inhibitor.

3. Care should be taken to ensure that these cargoes are sufficiently protected to prevent deleterious chemical change at all times during the voyage. Ships carrying such cargoes should be provided with a certificate of protection from the manufacturer and kept during the voyage specifying:

(1) the name and amount of additive present
(2) whether the additive is oxygen dependent **【See Guidance】**
(3) date additive was put in the product and duration of effectiveness
(4) any temperature limitations qualifying the additives" effective lifetime and
(5) the action to be taken should the length of voyage exceed the effective lifetime of the additives.

4. Ships using the exclusion of air as the method of preventing oxidation of the cargo should comply with **901. 3.**

5. When a product containing an oxygen-dependent inhibitor is to be carried: **【See Guidance】**

(1) in a ship for which inerting is required under **SOLAS II-2/4.5.5**, as amended, the application of inert gas shall not take place before loading or during the voyage, but shall be applied before commencement of unloading
(2) in a ship to which **SOLAS II-2/4.5.5**, as amended, does not apply, the product may be carried without inertion (in tanks of a size not greater than 3,000 m^3). If inertion is to be applied on such a ship, then the application of inert gas shall not take place before loading or during the voyage, but shall be applied before commencement of unloading.

6. Venting systems should be of a design that eliminates blockage from polymer build-up. Venting equipment should be of a type that can be checked periodically for adequacy of operation.

7. Crystallization or solidification of cargoes normally carried in the molten state can lead to depletion of inhibitor in parts of the tank contents. Subsequent remelting can thus yield pockets of uninhibited, liquid with the accompanying risk of dangerous polymerization. To prevent this, care should be taken to ensure that at no time are such cargoes allowed to crystallize or solidify, either wholly or partially, in any part of the tank. Any required heating arrangements should be such as to ensure that in no part of the tank does cargo become overheated to such an extent that any dangerous polymerization can be initiated. If the temperature from steam coils would induce overheating, an indirect low-temperature heating system should be used.

1514. Cargoes with a vapour pressure greater than 0.1013 MPa absolute at 37.8°C (IBC Code 15.14)

1. For a cargo referenced in column "o" in the table of **Sec 17** to this Article, a mechanical refrigeration system should be provided unless the cargo system is designed to withstand the vapour pressure of the cargo at 45°C. Where the cargo system is designed to withstand the vapour pressure of the cargo at 45°C, and no refrigeration system is provided, a notation should be made in the conditions of carriage on the International Certificate of Fitness for the Carriage of Dangerous Chemicals in Bulk to indicate the required relief valve setting for the tanks.

2. A mechanical refrigeration system should maintain the liquid temperature below the boiling temperature at the cargo tank design pressure.

3. When ships operate in restricted areas and at restricted times of the year, or on voyages of limited duration, the Society involved may agree to waive requirements for a refrigeration system. A notation of any such agreement, listing geographic area restrictions and times of the year, or voyage duration limitations, should be included in the conditions of carriage on the International Certificate for the Carriage of Dangerous Chemicals in Bulk.

4. Connections should be provided for returning expelled gases to shore during loading. **【See Guidance】**

5. Each tank should be provided with a pressure gauge which indicates the pressure in the vapour space above the cargo.

6. Where the cargo needs to be cooled, thermometers should be provided at the top and bottom of each tank.

7. (1) No cargo tanks should be more than 98 % liquid-full at the reference temperature (R).

(2) The maximum volume (V_L) of cargo to be loaded in a tank should be:

$$V_L = 0.98\, V \frac{\rho_R}{\rho_L}$$

where

V : volume of the tank

ρ_R : relative density of cargo at the reference temperature (R)

ρ_L : relative density of cargo at the loading temperature

R : reference temperature corresponding to the vapour pressure of the cargo at the set pressure of the pressure relief valve.

(3) The maximum allowable tank filling limits for each cargo tank should be indicated for each loading temperature which may be applied, and for the applicable maximum reference temperature, on a list approved by the Society. A copy of the list should be permanently kept on board by the master.

1515. Hydrogen sulphide (H_2S) detection equipment for bulk liquids (IBC Code 15.15) *(2021)*

Hydrogen sulphide (H_2S) detection equipment shall be provided on board ships carrying bulk liquids prone to H_2S formation. It should be noted that scavengers and biocides, when used, may not be 100% effective in controlling the formation of H2S. Toxic vapour detection instruments complying with the requirement in **1302. 1** of the Code for testing for H_2S may be used to satisfy this requirement."

1516. Cargo contamination (IBC Code 15.16) 【See Guidance】

1. Deleted. *(2021)*

2. Where column "o" in the table of **Sec 17** refers to this Article, water should not be allowed to contaminate this cargo. In addition, the following provisions apply:

(1) Air inlets to pressure/vacuum relief valves of tanks containing the cargo should be situated at least 2 m above the weather deck.

(2) Water or steam should not be used as the heat transfer media in a cargo temperature control system required by **Sec 7.**

(3) The cargo should not be carried in cargo tanks adjacent to permanent ballast or water tanks unless the tanks are empty and dry.

(4) The cargo should not be carried in tanks adjacent to slop tanks or cargo tanks containing ballast or slops or other cargoes containing water which may react in a dangerous manner. Pumps, pipes or vent lines serving such tanks should beseparate from similar equipment serving tanks containing the cargo. Pipelines from slop tanks or ballast lines should not pass through tanks containing the cargo unless encased in a tunnel.

1517. Increased ventilation requirements (IBC Code 15.17) 【See Guidance】

For certain products, the ventilation system as described in **1201.3** should have a minimum capacity of at least 45 changes of air per hour based upon the total volume of space. The ventilation system exhaust ducts should discharge at least 10 m away from openings into accommodation spaces, work areas or other similar spaces, and intakes to ventilation systems, and at least 4 *m* above the tank deck.

1518. Special cargo pump room requirements (IBC Code 15.18) 【See Guidance】

For certain products, the cargo pump room should be located on the deck level or cargo pumps should be located in the cargo tank. The Society may give special consideration to cargo pump rooms below deck.

1519. Overflow control (IBC Code 15.19)

1. The provisions of this Article are applicable where specific reference is made in column "o" in the table of **Sec 17,** and are in addition to the requirements for gauging devices.

2. In the event of a power failure on any system essential for safe loading, an alarm should be given to the operators concerned.

3. Loading operations should be terminated at once in the event of any system essential for safe loading becoming inoperative.

4. Level alarms should be capable of being tested prior to loading. **【See Guidance】**

5. The high-level alarm system required under **Par 6** should be independent of the overflow control system required by **Par 7** and should be independent of the equipment required by **1301.** **【See Guidance】**

6. Cargo tanks should be fitted with a visual and audible high-level alarm which complies with **Pars 1** to **5** and which indicates when the liquid level in the cargo tank approaches the normal full condition. **【See Guidance】**

7. A tank overflow control system required by this Article should:

(1) come into operation when the normal tank loading procedures fail to stop the tank liquid level exceeding the normal full condition;
(2) give a visual and audible tank overflow alarm to the ship's operator; and
(3) provide an agreed signal for sequential shutdown of onshore pumps or valves or both and of the ship's valves. The signal, as well as the pump and valve shutdown, may be dependent on operator's intervention. The use of shipboard automatic closing valves should be permitted only when specific approval has been obtained from the Society and the port Administrations concerned.

8. The loading rate (LR) of the tank should not exceed:

$$LR = \frac{3{,}600\,U}{t} \quad (\mathrm{m^3/h})$$

where

U : ullage volume ($\mathrm{m^3}$) at operating signal level;

t : time (s) needed from the initiating signal to fully stopping the cargo flow into the tank, being the sum of times needed for each step in sequential operations such as operator's responses to signals, stopping pumps and closing valves; and should also take into account the pipeline system design pressure.

1520. Alkyl(C_7-C_9) nitrates, all isomers (IBC Code 15.20)

1. The carriage temperature of the cargo should be maintained below 100°C to prevent the occurrence of a self-sustaining, exothermic decomposition reaction.

2. The cargo may not be carried in independent pressure vessels permanently affixed to the vessel's

deck unless:

(1) the tanks are sufficiently insulated from fire; and

(2) the vessel has a water deluge system for the tanks such that the cargo temperature is maintained below 100°C and the temperature rise in the tanks does not exceed 1.5°C/hour for a fire of 650°C (1200°F).

1521. Temperature sensors (IBC Code 15.21)

Temperature sensors should be used to monitor the cargo pump temperature to detect overheating due to pump failures.

Section 16 Operational Requirements

1601. Maximum allowable quantity of cargo per tank (IBC Code 16.1) 【See Guidance】

1. The quantity of a cargo required to be carried in a type 1 ship should not exceed 1,250 m^3 in any one tank.
2. The quantity of a cargo required to be carried in a type 2 ship should not exceed 3,000 m^3 in any one tank.
3. Tanks carrying liquids at ambient temperatures should be so loaded as to avoid the tank becoming liquid-full during the voyage, having due regard to the highest temperature which the cargo may reach.

1602. Cargo information (IBC Code 16.2)

1. A copy of this Chapter, or national regulations incorporating the provisions of this Chapter, should be on board every ship covered by this Chapter.
2. Any cargo offered for bulk shipment shall be indicated in the shipping documents by the product name, under which it is listed in Sec 17 or 18 or the latest edition of MEPC.2/Circ. or under which it has been provisionally assessed. Where the cargo is a mixture, an analysis indicating the dangerous components contributing significantly to the total hazard of the product shall be provided, or a complete analysis if this is available. Such an analysis shall be certified by the manufacturer or by an independent expert acceptable to the Society.
3. Information should be on board, and available to all concerned, giving the necessary data for the safe carriage of the cargo. Such information should include a cargo stowage plan to be kept in an accessible place, indicating all cargo on board, including each dangerous chemical carried:
   (1) a full description of the physical and chemical properties, including reactivity necessary for the safe containment of the cargo
   (2) action to be taken in the event of spills or leaks
   (3) countermeasures against accidental personal contact
   (4) fire-fighting procedures and fire-fighting media
   (5) procedures for cargo transfer, tank cleaning, gas-freeing and ballasting
   (6) for those cargoes required to be stabilized or inhibited in accordance with **1501., 1505. 1** (11) or **1513. 3,** the cargo should be refused if the certificate required by these paragraphs is not supplied.
4. If sufficient information necessary for the safe transportation of the cargo is not available, the cargo should be refused.
5. Cargoes which evolve highly toxic imperceptible vapours should not be transported unless perceptible additives are introduced into the cargo.
6. Where column "o" in the table of **Sec 17** refers to this paragraph, the cargo's viscosity at 20°C shall be specified on a shipping document and if the cargo's viscosity exceeds 50mPa· s at 20°C, the temperature at which the cargo has a viscosity of 50mPa· s shall be specified in the shipping document.
7. Where column o in the table of **Sec 17** refers to this paragraph, the cargo is subject to the pre-wash requirements in regulation 13.7.1.4 of Annex II of MARPOL. *(2021)*
8. Deleted.
9. Where column “o” in the table of **Sec 17** refers to this paragraph, the cargo’s melting point shall be indicated in the shipping document. *(2021)*

1603. Personnel training (IBC Code 16.3)

1. All personnel should be adequately trained in the use of protective equipment and have basic training in the procedures appropriate to their duties, necessary under emergency conditions.
2. Personnel involved in cargo operations should be adequately trained in handling procedures.

3. Officers shall be trained in emergency procedures to deal with conditions of leakage, spillage or fire involving the cargo, based on the guidelines developed by IMO, and a sufficient number of them shall be instructed and trained in essential first aid for cargoes carried, based on the guidelines developed by the IMO. Refer to the Medical First Aid Guide for use in Accident involving Dangerous Goods (MFAG), which provides advice on the treatment of casualties in accordance with the symptoms exhibited as well as equipment and antidotes that may be appropriate for treating the casulity and to the relevant provisions of the STCW Code, part A and B.

1604. Opening of and entry into cargo tanks (IBC Code 16.4)

1. During handling and carriage of cargoes producing flammable or toxic vapours, or both, or when ballasting after the discharge of such cargo, or when loading or unloading cargo, cargo tank lids should always be kept closed. With any hazardous cargo, cargo tank lids, ullage and sighting ports and tank washing access covers should be open only when necessary. **【See Guidance】**
2. Personnel should not enter cargo tanks, void spaces around such tanks, cargo handling spaces or other enclosed spaces unless:
   (1) the compartment is free of toxic vapours and not deficient in oxygen; or
   (2) personnel wear breathing apparatus and other necessary protective equipment, and the entire operation is under the close supervision of a responsible officer.
3. Personnel should not enter such spaces when the only hazard is of a purely flammable nature, except under the close supervision of a responsible officer.

1605. Stowage of cargo samples (IBC Code 16.5) 【See Guidance】

1. Samples which have to be kept on board should be stowed in a designated space situated in the cargo area or, exceptionally, elsewhere, subject to the approval of the Society.
2. The stowage space should be:
   (1) cell-divided in order to avoid shifting of the bottles at sea
   (2) made of material fully resistant to the different liquids intended to be stowed and
   (3) equipped with adequate ventilation arrangements.
3. Samples which react with each other dangerously should not be stowed close to each other.
4. Samples should not be retained on board longer than necessary.

1606. Cargoes not to be exposed to excessive heat (IBC Code 16.6) 【See Guidance】

1. Where the possibility exists of a dangerous reaction of a cargo such as polymerization, decomposition, thermal instability or evolution of gas, resulting from local overheating of the cargo in either the tank or associated pipelines, such cargo should be loaded and carried adequately segregated from other products whose temperature is sufficiently high to initiate a reaction of such cargo (see **701. 5** (4)).
2. Heating coils in tanks carrying this product should be blanked off or secured by equivalent means.
3. Heat-sensitive products should not be carried in deck tanks which are not insulated.
4. In order to avoid elevated temperatures, this cargo should not be carried in deck tanks.

Section 17 Summary of Minimum Requirements

1. The list of the products applied to this Section shall refer to the summary of minimum requirements in chapter 17 of the IBC Code, as amended, which shall be in accordance with the **Annex 7B-1 specified separatedly.** *(2021)* **【See Guidance】**

2. Mixtures of noxious liquid substances presenting pollution hazards only and which are provisionally assessed under regulation 6.3 of MARPOL Annex II, may be carried under the requirements of this Chapter applicable to the appropriate position of the entry in this Section for noxious liquids, not otherwise specified (n.o.s).

Section 18 List of Chemicals to which this Chapter does not apply

1. This Section applies to products, which have been reviewed for their safety and pollution hazards and determined not to present hazards to such an extent as to warrant application of the Code.
2. Although the products listed in this Section fall outside the scope of this Chapter, the attention of the Society is drawn to the fact that some safety precautions may be needed for their safe transportation. Accordingly, the Society should prescribe appropriate safety requirements.
3. Some liquid substances are identified as falling into pollution category Z and, therefore, subject to certain operational requirements of Annex II of MARPOL 73/78.
4. Liquid mixtures which are assessed or provisionally under regulation 6.3 of MARPOL Annex II as falling into pollution category Z or OS, and which do not present safety hazards, may be carried under the appropriate entry in this Section for "Noxious or Non-Noxious liquid Substances, not otherwise specified (n.o.s)".
5. The list of the products applied to this Section shall refer to the products in chapter 18 of the IBC Code as amended. The explanatory notes of the products are of the following.
   (1) Product name : The product names shall be used in the shipping document for any cargo offered for bulk shipments. Any additional name may be included in brackets after the product name. In some cases, the product name are not identical with the names given in previous issues of the Code.
   (2) Pollution category : The letter Z means the pollution category assigned to each product under Annex II of MARPOL 73/78. OS means the product was evaluated and found to fall outside the categories X, Y, or Z.
6. The list of products shall be in accordance with the **Annex 7B-2** specified separatedly. *(2021)* **【See Guidance】**

Section 19 Index of Products Carried in Bulk

The index of products shall be in accordance with the **Annex 7B-3** specified separatedly. *(2021)* **【See Guidance】**

Section 20 Transport of Liquid Chemical Wastes

2001. General (IBC Code 20.1)

1. Maritime transport of liquid chemical wastes could present a threat to human health and to the environment.

2. Liquid chemical wastes should, therefore, be transported in accordance with relevant international conventions and recommendations and, in particular, where it concerns maritime transport in bulk, with the requirements of this Chapter.

2002. Definitions (IBC Code 20.2)

For the purpose of this Section:

(1) **"Liquid chemical wastes"** are substances, solutions or mixtures, offered for shipment, containing or contaminated with one or more constituents which are subject to the requirements of this Chapter and for which no direct use is envisaged but which are carried for dumping, incineration or other methods of disposal other than at sea.

(2) **"Transboundary movement"** means maritime transport of wastes from an area under the national jurisdiction of one country to or through an area under the national jurisdiction of another country, or to or through an area not under the national jurisdiction of any country, provided at least two countries are concerned by the movement.

2003. Applicability (IBC Code 20.3)

1. The requirements of this Section are applicable to the transboundary movement of liquid chemical wastes in bulk by seagoing ships and should be considered in conjunction with all other requirements of this Chapter.

2. The requirements of this Section do not apply to:

(1) wastes derived from shipboard operations which are covered by the requirements of MARPOL 73/78;

(2) substances, solutions or mixtures containing or contaminated with radioactive materials which are subject to the applicable requirements for radioactive materials.

2004. Permitted shipments (IBC Code 20.4)

Transboundary movement of wastes is permitted to commence only when:

(1) notification has been sent by the competent authority of the country of origin, or by the generator or exporter through the channel of the competent authority of the country of origin, to the country of final destination and

(2) the competent authority of the country of origin, having received the written consent of the country of final destination stating that the wastes will be safely incinerated or treated by other methods of disposal, has given authorization to the movement.

2005. Documentation (IBC Code 20.5)

In addition to the documentation specified in **1602.**, ships engaged in transboundary movement of liquid chemical wastes transported in bulk should carry on board a waste movement document issued by the competent authority of the country of origin.

2006. Classification of liquid chemical wastes (IBC Code 20.6)

For the purpose of the protection of the marine environment all liquid chemical wastes transported in bulk should be treated as Category A noxious liquid substances, irrespective of the actual evaluated category.

2007. Carriage and handling of liquid chemical wastes (IBC Code 20.7)

Liquid chemical wastes are to be carried in ships and cargo tanks in accordance with the minimum requirements for liquid chemical wastes specified in **Sec 17,** unless there are clear grounds indicating that the hazards of the wastes would warrant:

(1) carriage in accordance with the ship type 1 requirements or

(2) any additional requirements of this Chapter applicable to the substance or, in case of a mixture, its constituent presenting the predominant hazard.

Section 21 Criteria for assigning carriage requirements for products subject to the IBC Code

This Criteria is to be in accordance with the **Annex 7B-4** specified separatedly. *(2021)* **【See Guidance】**

2025

Guidance Relating to
the Rules for the Classification of Steel Ships

Part 7
Ships of Special Service

Chapter 5 Ships Carrying Liquefied Gases in Bulk
Chapter 6 Ships Carrying Dangerous Chemicals in Bulk

GA-07B-E

KR

APPLICATION OF THE GUIDANCE RELATING TO THE RULES

This "Guidance Relating to the Rules for the Classification of Steel Ships" (hereafter called as the Guidance Relating to the Rules) is prepared with the intent of giving details as to the treatment of the various provisions for items required the unified interpretations and items not specified in the Rules, and the requirements specified in the Guidance Relating to the Rules are to be applied, in principle, in addition to the various provisions in the Rules.

As to any technical modifications which can be regarded as equivalent to any requirements in the Guidance Relating to the Rules, their flexible application will be properly considered.

APPLICATION OF PART 7 "SHIPS OF SPECIAL SERVICE(CH 5, 6)"

1. Unless expressly specified otherwise, the requirements in the Guidance apply to ships for which contracts for construction are signed on or after 1 July 2025.
2. The amendments to the Guidance for 2024 edition and their effective date are as follows;

Effective Date : 1 January 2025 (based on the date of the contract for construction or the date of an application for approval)

CHAPTER 5 SHIPS CARRYING LIQUEFIED GASES IN BULK

Section 5 Process Pressure Vessels and Liquid, Vapour and Pressure Piping Systems
- 513.1 (5) and 513.5 have been newly added.

Effective Date : 1 July 2025

CHAPTER 5 SHIPS CARRYING LIQUEFIED GASES IN BULK

Section 4 Cargo Containment
- 420.6 (4) and (5) have been deleted.

Section 16 Use of Cargo as Fuel
- 1601.1 has been newly added.

Annex 7A-5 Use of LPG Cargo as Fuel
- Annex 7A-5 has been entirely amended.

Annex 7A-9 Guidance for Cargo Fuel Ready Ships
- Annex 7A-5 has been newly added.

Effective Date : 1 January 2026 (based on contract date for construction)

CHAPTER 6 SHIPS CARRYING DANGEROUS CHEMICALS IN BULK

Section 1 General
- 106.1 (3) has been newly added.

Section 3 Ship Arrangement
- 302.2 has been newly added.

CONTENTS

CHAPTER 5 SHIPS CARRYING LIQUEFIED GASES IN BULK ····· 1

Section 1 General ····· 1
Section 2 Ship Survival Capability and Location of Cargo Tanks ····· 3
Section 3 Ship Arrangements ····· 7
Section 4 Cargo Containment ····· 15
Section 5 Process Pressure Vessels and Liquid, Vapour and Pressure Piping Systems ····· 37
Section 6 Materials of Construction and Quality Control ····· 45
Section 7 Cargo Pressure/Temperature Control ····· 50
Section 8 Vent System for Cargo Containment ····· 58
Section 9 Cargo Containment System Atmosphere Control ····· 63
Section 10 Electrical Installations ····· 67
Section 11 Fire Protection and Fire Extinction ····· 69
Section 12 Mechanical Ventilation in the Cargo Area ····· 72
Section 13 Instrumentation and Automation Systems ····· 73
Section 15 Filling Limits for Cargo Tanks ····· 76
Section 16 Use of Cargo as Fuel ····· 78
Section 17 Special Requirements ····· 79
Section 18 Operating Requirements ····· 80
Section 19 Summary of Minimum Requirements ····· 81

CHAPTER 6 SHIPS CARRYING DANGEROUS CHEMICALS IN BULK ····· 83

Section 1 General ····· 83
Section 2 Ship Survival Capability and Location of Cargo Tanks ····· 85
Section 3 Ship Arrangements ····· 91
Section 5 Cargo Transfer ····· 101
Section 7 Cargo Temperature Control ····· 106
Section 8 Cargo Tank Venting and Gas-freeing Arrangements ····· 108
Section 9 Environmental Control ····· 112
Section 10 Electrical Installations ····· 113
Section 11 Fire Protection and Fire Extinction ····· 114
Section 12 Mechanical Ventilation in the Cargo Area ····· 116
Section 13 Instrumentation ····· 118
Section 14 Personnel Protection ····· 120
Section 15 Special Requirements ····· 122
Section 16 Operational Requirements ····· 126

Annex 7A-1 Requirements for Ships not having the International Certificate of Fitness for the Carriage of Liquefied Gases in Bulk ····· 127
Annex 7A-2 Guidelines for the Evaluation of the Adequacy of Type C Tank Vent Systems ····· 152
Annex 7A-3 LNG Bunkering Systems ····· 157
Annex 7A-4 High manganese austenitic steel for Cryogenic Service ····· 167
Annex 7A-5 Use of LPG Cargo as Fuel ····· 170
Annex 7A-6 Non-Metallic Materials(IGC Code Appendix 4) ····· 173
Annex 7A-7 Standard for the Use of Limit State Methodologies in the Design of Cargo Containment Systems of Novel Configuration (IGC Code Appendix 5) ····· 178
Annex 7A-8 Guidelines for Safety Margin of Cargo Containment System ··· 184
Annex 7B-1 Table of Summary of Minimum Requirements ····· 201
Annex 7B-2 List of products to which the Code does not apply ····· 233
Annex 7B-3 Index of Products Carried in Bulk ····· 234
Annex 7B-4 Criteria for assigning carriage requirements for products subject to the IBC Code ····· 235

CHAPTER 5 SHIPS CARRYING LIQUEFIED GASES IN BULK

Section 1 General

102. Approval for plans 【See Rule】

In application to **102. 2** (7), (8) and (9) of the Rules, the term "where considered necessary by the Society" means the cases as specified in **Ch 5, 413. 4** of the Rules and **Ch 5, 413. 1** of the Guidance.

105. Definitions

1. Cargo area 【See Rule】

Cargo area extended by the requirements in **303. 2** of the Rules is, for example, as shown in **Fig 7.5.1** of the Guidance.

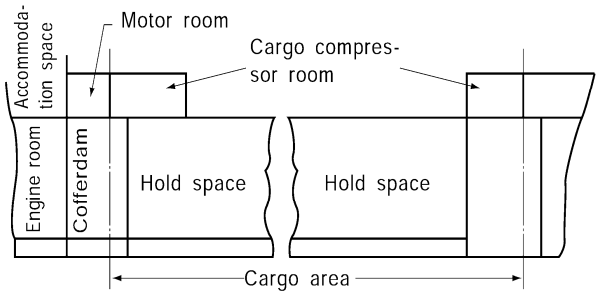

Fig 7.5.1

2. Hazardous area 【See Rule】

(1) The "within 3 m of possible sources of gas release" referred to in **105. 23** (7) of the Rules is to be measured as a sphere above outlets and openings, and as a cylinder below.

(2) The "area on the open deck up to a height of 2.4 m above the weather deck" referred to in **105. 23** (9) of the Rules is, for example, as shown in (a) through (d) of **Fig 7.5.2** of the Guidance.

(3) The "direct opening into" referred to in **105. 23** (12) of the Rules includes those openings such as hatches normally used for access which are closed by doors, covers, etc. Bolted plates for removal of machinery need not be regarded as direct openings where another means for access are provided.

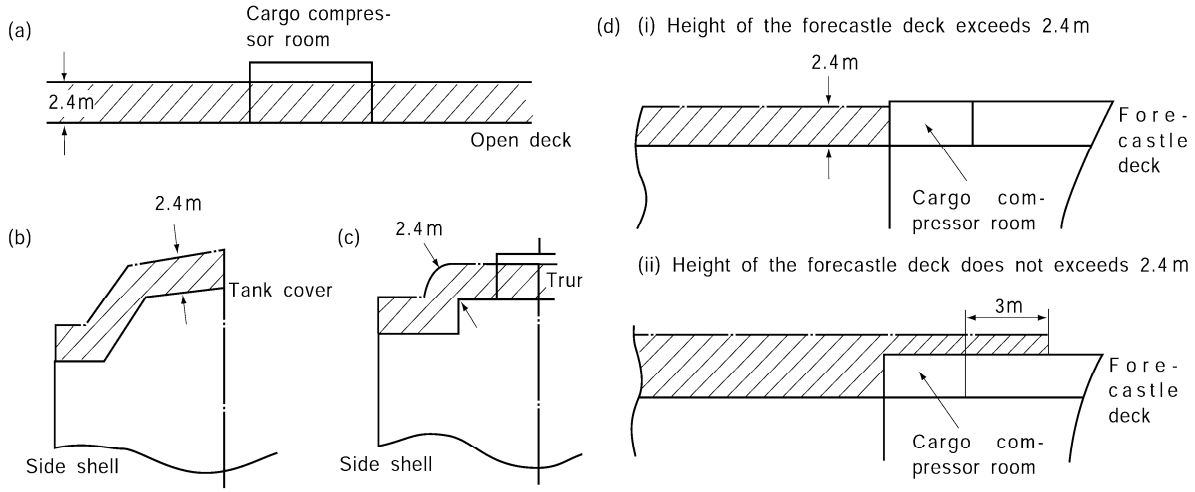

Notc:
A space in the cargo compressor room is to consider the gas-dangerous space in accordance with the requirements in 105. 23(6) of the Rules.

Fig 7.5.2

3. Hold space 【See Rule】

"Hold spaces" in the requirements in **105. 25** of the Rules includes the peripheral compartments of cargo tanks in the case of integral tanks. (See **Fig 7.5.3** of the Guidance)

4. Independent 【See Rule】

The "provisions available for the potential connection to other systems" referred to in **105. 26** of the Rules include the blank flanges.

5. Interbarrier space 【See Rule】

"Inter-barrier space" referred to in **105. 28** of the Rules means the peripheral compartments of the cargo tanks in the case of integral tanks. (See **Fig 7.5.3** of the Guidance)

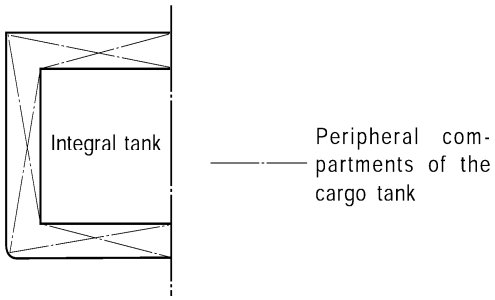

Fig 7.5.3

Section 2 Ship Survival Capability and Location of Cargo Tanks

202. Freeboard and stability

1. In applying the requirement in **2** of the Rules, for the ships assigned tropical loadline, 'all seagoing conditions' is to be included loading condition relating to tropical loadline.

2. Solid ballast 【See Rule】

In applying the requirements in **202. 4** of the Rules, the solid ballast is to comply with the following requirements.

(1) In case where solid ballast is arranged under unavoidable reasons to ensure stability of the ship, the distance between such solid ballast and the cargo tank is to be not less than d at **204. 1**.

(2) The solid ballast is to be of concrete blocks and similar materials which can be fitted securely to the hull structure of the ship. No solid ballast consisting of scrap iron in bulk, etc. is accepted.

3. In applying the requirements in **202. 6** of the Rules, the performance standards recommended by the Organization refer to following: **【See Rule】**

- part B, chapter 4, of the International Code on Intact Stability, 2008 (2008 IS Code)
- the Guidelines for the Approval of Stability Instruments (MSC. 1/Circ.1229), annex, section 4;
- the technical standards defined in part 1 of the Guidelines for verification of damage stability requirements for tankers (MSC.1/Circ.1461)

4. In applying the requirements in **202. 6** (3) of the Rules, "where deemed appropriate by the Society" means that the following ships provided the procedures employed for intact and damage stability verification maintain the same degree of safety, as being loaded in accordance with the approved conditions.

(1) ships which are on a dedicated service, with a limited number of permutations of loading such that all anticipated conditions have been approved in the stability information provided to the master in accordance with the requirements of paragraph **202. 5** of the Rules:

(2) ships where stability verification is made remotely by a means approved by the Society.

(3) ships which are loaded within an approved range of loading conditions; or

(4) ships constructed before 1 July 2016 provided with approved limiting KG/GM curves covering all applicable intact and damage stability requirements.

5. In applying the requirements in **4** “the approved conditions” refer to following:

- Operational guidance provided in part 2 of the Guidelines for verification of damage stability requirements for tankers (MSC.1/Circ.1461).

203. Damage assumptions

1. Other damages 【See Rule】

For the purpose of the requirements in **203. 2** (2) of the Rules, the transverse bulkheads assumed to remain intact in the requirements in **206. 1** (4) to (6) of the Rules may also be assumed that they remain free from local damages.

204. Location of cargo tanks 【See Rule】

1. For the purpose of the requirements in **204. 3** of the Rules, the suction wells are not to be installed less than d from the shell plating according to **204. 1** of the Rules.

205. Flooding assumptions 【See Rule】

1. General

(1) Conditions that are anticipated to cause more severe results are to be selected of all anticipated conditions of loading, and consideration is to be given to the following (A) through (H) in making calculation according to **205. 1** of the Rules.

(A) Tanks in way of the assumed damage filled with liquid at increments of about 25 % between empty and the maximum weight of liquid, or liquids, intended to be carried in the particular tanks under consideration.

(B) The distribution of liquids in the adjacent tanks concerned which will give the most severe

result, taking trim into account.

(C) A number of draughts over the operating range, up to and including the tropical freeboard mark. The fresh water free boards need not be considered.

(D) The effect of damage involving the machinery space and adjacent tanks containing liquids over a number of draughts as in (C) above.

(E) The ship in either the departure or the arrival condition, whichever will give the most severe result.

(F) The ship without trim and a sufficient number of trims covering the operating range, in order to permit interpolation.

(G) Where the assumed damage causes the ship to trim by the stern, condition having the largest allowable trim by the stern, consistent with operational requirements.

(H) Where the assumed damage causes the ship to trim by the bow, condition having the largest allowable trim by the bow, consistent with operational requirements.

(2) The free surface effects of intact cargo tanks in the damage stability calculation are to be computed for the actual angle of heel caused by assumed damage and for each angle of heel within the stability limit.

(3) In calculating the effect of free surface of consumable liquids, it is to be assumed that, for each type of liquid, at least one transverse pair or a single centre line tank has maximum free surface, and the tank or combination of tanks to be taken into account are to be those where the effect of free surfaces is the greatest ; in each tank the centre of gravity of the contents is to be taken at the centre of volume of the tank. The remaining tanks are to be assumed either completely empty or completely filled, and the distribution of consumable liquids among these tanks is to be such as to obtain the greatest possible height above the keel for the centre of gravity.

(4) In calculating free surface effects given in the preceding (3), the requirements are to be complied with preceding (2).

2. Permeability

For the purpose of the requirements in **205. 2** of the Rules, the Society may approve a lesser permeability in consideration of volume of the insulations etc. provided within the compartment.

3. Damage of transverse bulkhead

In applying the requirements for damage of transverse bulkhead specified in **205. 4** of the Rules, the extent of damage when the transverse bulkhead is stepped or recessed, are for example, as shown in Fig **7.5.4** of the Guidance.

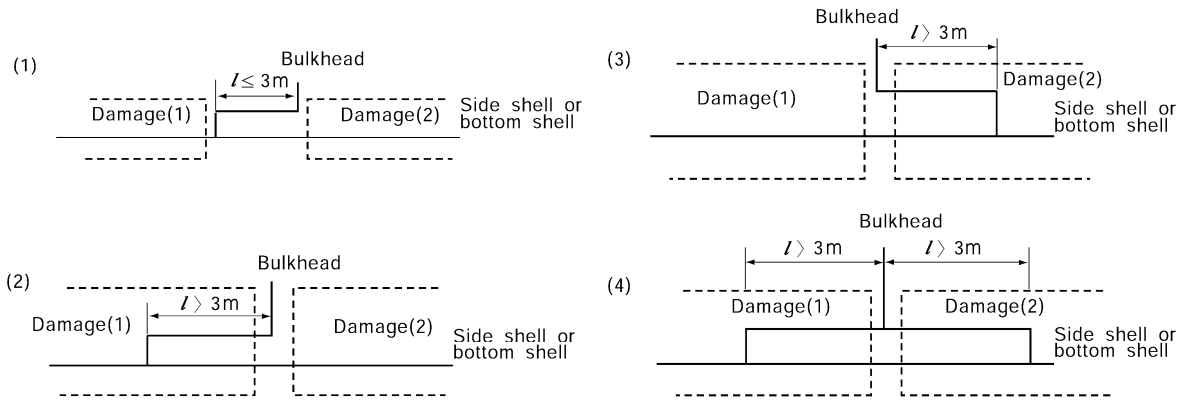

Fig 7.5.4 Damage extend of transverse bulkhead

4. Equalization arrangements

(1) The equalization arrangements specified in **205. 6** of the Rules are to be made operable from a readily accessible place in the damaged condition before using the equalization arrangement.

(2) The righting arm curve of the ship without using the equalization arrangement referred to in the preceding (1) is to be determined in accordance with the requirements in **205. 3** of the Rules,

but calculation in this case is to be made assuming that the cross-levelling pipe is closed or this equalization arrangement is not effectively functioning.

(3) The cross sectional area of the cross-levelling pipe used for the equalization arrangement referred to in the preceding (1) is to satisfy the value obtained from the following equation :

$$A \geq 7.5\frac{V}{\sqrt{H}} \quad (\mathrm{cm}^2)$$

where:

A : cross sectional area of cross-levelling pipe (cm^2)

V : estimated flooding volume in flooded compartment (cm^3)

H : height from the draught line before flooding to the centre line of pipe (m)

(4) "ducts of large cross-sectional area" referred to in **205. 6** of the Rules are to satisfy both of the following equations :

$$A \geq 150\frac{V}{\sqrt{H}} \quad (\mathrm{cm}^2), \qquad A \geq 2Sh \quad (\mathrm{cm}^2)$$

where:

V : value obtained by the preceding (3)

H : height obtained by the preceding (3) to the centre of duct

S : frame distance (cm). However, in case of longitudinal framing system, S may be obtained from the following equation but not to be less than 61 cm :

$$S = 45 + 0.2L_f \quad (\mathrm{cm})$$

h : $B/15$ (cm)

5. Progressive flooding

The "arrangements should be such that progressive flooding cannot thereby extend" referred to in the requirements in **205. 7** of the Rules may be such as a stop valve operable from the exposed deck and accommodation space, etc. provided outside the extent of damage. In this case, any part of operating systems is to effectively function for assumed damage.

6. Buoyancy of superstructure

(1) For the purpose of **205. 8** of the Rules, the longitudinal extent of damage to superstructures above a machinery space located aft is to be the same as the longitudinal extent of the side damage to the machinery space specified **206. 1** of the Rules. (See Fig **7.5.5** of the Guidance)

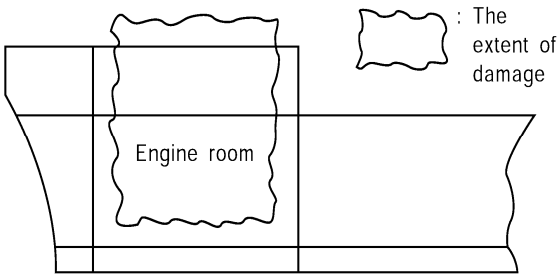

Fig 7.5.5 Buoyancy of superstructure

(2) The sliding watertight doors specified in **205. 8** (2) of the Rules are to be remotely operable

from a readily accessible place in case of damage. Further, the openings of weathertight accepted within the minimum range of residual stability are to be capable of being securely closed at final equilibrium.

206. Standard of damage 【See Rule】

1. General

(1) For the purpose of the standard of damage specified in **206. 1** of the Rules, damage assumed to have sustained within 0.3 L_f or there about from the stern are to be in accordance with the following requirements (A) and (B) :
  (A) For bottom damage for 0.3 L_f from the forward perpendicular and above (according to **203. 1** (2) of the Rules), such damage may not be considered beyond the point of 0.3 L_f from the forward perpendicular.
  (B) For cases of bottom damage which is applied to damage sustained in areas after the point of 0.3 L_f from the forward perpendicular (according to **203. 1** (2) of the Rules), such damage is to be considered from the forward perpendicular up to the point corresponding to 0.3 L_f – 1/3$L_f^{2/3}$ m or 0.3 L_f – 14.5 m which is greater. *(2018)*

(2) For a type 3G ship less than 125 m in length(L_f) specified in **206. 1** (6) of the Rules, the ability to survive the flooding of machinery space is to be in accordance with the following (A) and (B):
  (A) The ability to survive the flooding of machinery space is to be in accordance with the requirements **207. 1** (1) and (2) of the Rules.
  (B) Where L_f is 70 m or more and less than 125 m, the areas under the curve at least within 20° range beyond the position of equilibrium are to be 0.0175 m · rad or more at final equilibrium after flooding.
  (C) Where L_f is less than 70 m, the areas under curve are to be 0.0088 m · rad or more.

(3) In case the bulkhead in machinery space is watertight structure at the flooding of machinery space referred to in the preceding (2), around machinery space areas of superstructures located aft may be considered the spare buoyancy. In this case the doors located at bulkhead of machinery space are to be sliding watertight doors remotely operated from superstructure deck.

2. Standard of damage for small ships

Small ships specified in **206. 2** of the Rules are ships less than 70 m of L_f. Special dispensations except type 1G ships may be in accordance with the following (1) through (4) :

(1) The extent of damage and the standard of damage are to be complied with the requirements **203.** and **206. 1** of the Rules respectively.
(2) It is to be in accordance with the requirements **207. 1** (1) and (2) of the Rules.
(3) The areas under the righting lever curve within 20° range beyond the position of equilibrium are to be 0.0175 m · rad or more at final equilibrium after flooding.
(4) The maximum values of residual righting lever is not limited.

207. Survival requirements 【See Rule】

1. Survival requirements *(2017)*

(1) For the purpose of the requirements of **207. 1** (1) of the Rules, openings specified in the following (A) and (B) may be regarded as watertight flash deck openings.
  (A) Openings protected by tank covers with strength equivalent to deck plating.
  (B) Openings for cargo containment systems on the weather decks sealed with effectively packing of non-combustible material complied with the requirements in **Pt 8, Ch 3, 201.** of the Rules or equivalent and of sufficient strength.
  (C) Sounding pipe with closing head

(2) For the purpose of **207. 2** (1) of the Rules, openings capable of being closed weathertight whose immersion are accepted within the required range of residual stability are to be closed securely at final equilibrium after flooding.

(3) Other openings capable of being closed weathertight do not include ventilators (complying with ILLC 19(4)) that for operational reasons have to remain open to supply air to the engine room or emergency generator room (if the same is considered buoyant in the stability calculation or protecting openings leading below) for the effective operation of the ship.

Section 3 Ship Arrangements

301. Segregation of the cargo area 【See Rule】

1. Segregation of the hold space

(1) "Forward of machinery spaces of category A" referred to in **301. 1** of the Rules means to be located forward of the forward bulkhead (including the stepped or recessed portions) in machinery spaces of category A. (See Fig **7.5.6** of the Guidance)

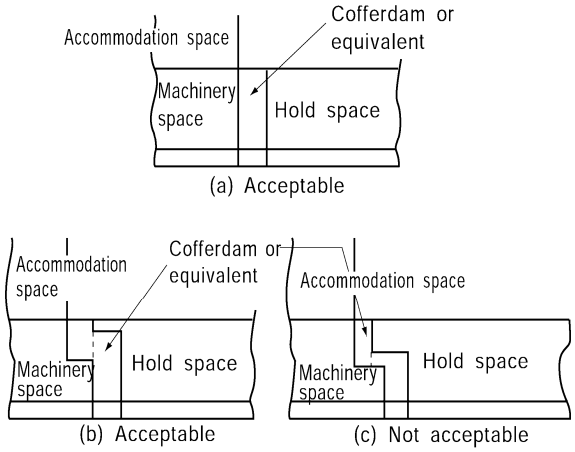

Fig 7.5.6 Segregation of the hold space

(2) Where machinery spaces of category A are located forward of hold spaces specified in the requirements in **301. 1** of the Rules, the following requirements (A) and (B) are to be complied with. Further, the Society may give additional requirements when deemed necessary. :
(A) The requirements for fire protection and fire extinguishing for the machinery spaces of category A specified in **Pt 8** of the Rules are to be complied with.
(B) The requirements for periodically unmanned machinery spaces specified in **Pt 9, Ch 3** of the Rules and **Pt 8, Ch 2~Ch 4** of the Guidance are to be complied with.

(3) Hold spaces are neither to be located forward of the collision bulkhead nor aftward of the aft peak bulkhead.

2. Segregation of the hold space in case of a cargo containment system not requiring full or partial secondary barrier

(1) "If there is no source of ignition or fire hazard" referred to in the requirements in **301. 2** of the Rules means those compartments such as ballast tanks, fresh water tanks, cofferdams, fuel oil tanks, cargo service spaces where there is no source of ignition and is not normally entered by persons, cargo pump rooms and cargo compressor rooms, etc.

(2) The packing used for bolted watertight manholes fitted on the boundaries of ballast tanks, cofferdams, fuel oil tanks from among the compartments referred to the preceding (1) may not be of non-combustible material.

3. Segregation of the hold space in case of a cargo containment system requiring full or partial secondary barrier

"If there is no source of ignition or fire hazard" referred to in the requirements in **301. 3** of the Rules means the compartments specified in **301. 2** (1) above.

4. Openings for cargo containment system

"Arrangements for sealing the weather decks in way of openings for cargo containments systems" referred to in **301. 7** of the Rules means the arrangements complying with the requirements in **Pt 4, Ch 2, 102.** and **103.** of the Rules.

302. Accommodation, service and machinery spaces and control stations 【See Rule】

1. Segregation of hold spaces requiring a secondary barrier

"To be so located as to avoid the entry of gas from the hold space to such spaces through a single failure of a deck or bulkhead" referred to in **302. 1** of the Rules means that boundaries of the compartment are so arranged as not to make linear contact or point contact with hold spaces. (See Fig **7.5.8** of the Guidance)

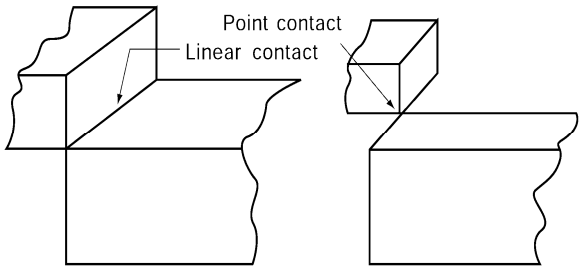

Fig 7.5.8 Segregation of hold spaces requiring a secondary barrier

2. Arrangements of entrances, air inlets and openings

(1) Windows and side-scuttles "so designed that a rapid and efficient gas and vapour tightening of the wheelhouse can be ensured" referred to in **302. 4** (2) of the Rules means those fitted with packing and clamping devices. These window and side scuttles are subject to hose tests or air tests in accordance with **Pt 8 Ch 2 402. 2** of the Guidance.

(2) In case where clear view screens are provided in wheelhouse within the restricted area specified in **302. 4** of the Rules, additional clamping devices are to be provided to the clear view screen or alternative arrangement of closing the window to make it gastight when the screen is not in rotating motion is to be made.

(3) The requirements in **302. 4** of the Rules may not apply to ships dedicated to the carriage of cargo which require neither F nor T in column f of **Table in Ch 5, Sec 19** of the Rules.

(4) In application of **302. 4** of the Rules, for gas carriers constructed on or after 1 July 1986 but before 1 July 2016, access to forecastle spaces containing sources of ignition may be permitted through doors facing the cargo area, provided the doors are located outside hazardous areas as defined in **Sec 10**. *(2024)*

3. Closing devices of air intakes and openings

(1) For the purpose of the requirements in **302. 6** of the Rules, closing devices for air intakes and openings are to have suitable gas-tightness where steel made fire protection flaps without gaskets/seals are not accepted.

(2) For the purpose of the requirements in **302. 6** of the Rules, the closing devices in ships intended to carry toxic products which require T in column f of the Table in **Ch 5, Sec 19** of the Rules, the following requirements (A) through (D) are to be complied with :

(A) The requirements in the preceding (1) are to be complied with.

(B) The closing devices need not be operable from within the single spaces and may be located in centralized positions. (refer to **Table 7.5.1-1**)*(2018)*

Table 7.5.1-1 Installation of means of operation inside space

	Usually manned space	Usually not manned space
Space carrying toxic products	Install inside space	May not installed inside space
Space not carrying toxic products	May not installed inside space	May not installed inside space

(C) Engine room casings, cargo machinery spaces, electric motor rooms and steering gear compartments are generally considered as spaces not covered by **302. 6.** of the Rules and therefore the requirement for closing devices need not be applied to these spaces. *(2017)*

(3) Regardless of (2), the closing devices should be operable from outside of the protected space. (**SOLAS** regulation II-2/5.2.1.1). *(2018)*

303. Cargo machinery spaces and turret compartments [See Rule]

1. Location

(1) For the purpose of the requirements in **303. 1** of the Rules, where cargo machinery spaces are permitted to be fitted at the after end of the after-most hold space or at the forward, the arrangements are, for example, as shown in Fig **7.5.9** of the Guidance.

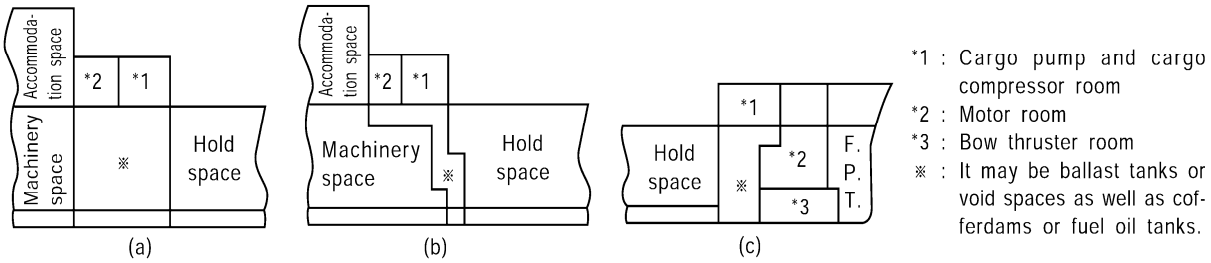

Fig 7.5.9 Cargo machinery spaces located at the after end of the after-most hold spaces or at the forward

(2) The arrangement that cargo machinery spaces are located below the exposed deck is not accepted.

(3) The compartments within the cargo area extended according to the requirements in **303. 2** of the Rules may not be regarded as hazardous space as far as the following requirements (A) and (B) are complied with (See Fig **7.5.10** of the Guidance). However, consideration is to be given to the requirements in **303. 3** of the Rules.

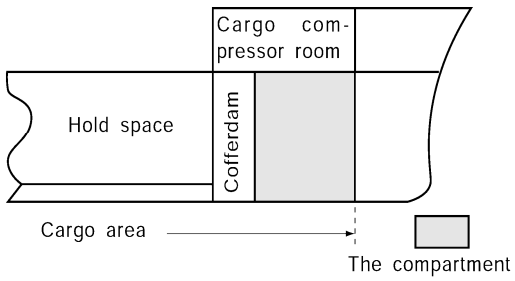

Fig 7.5.10 Non-hazardous space within cargo area

(A) The access holes and air vents to the compartment are to have no openings to hazardous space.
(B) The compartment is not to fall under any compartments specified in **105. 23** and **1001. 1** of the Rules.

(4) The requirements in **303. 3** of the Rules are also to apply to cases where cargo area is not e tended according to the requirements in **303. 2** of the Rules.

2. Cargo pumps and cargo compressors

(1) Shaft seals such as those manually feeding grease periodically are not considered as the "effective gastight segregation of the two space" referred to in **303. 4** of the Rules.

(2) The arrangement of motor rooms housing electric motors driving cargo pumps and cargo compressors referred to in **303. 4** of the Rules is to be as, for example, shown in Fig **7.5.11** (1) of the Guidance. If the arrangement can not be complied with the above requirement in case of such as a small ship, it may be as, for example, shown in Fig **7.5.11** (2) of the Guidance, where the openings of compartments such as chain lockers considered as the source of ignition are provided in the motor rooms, however, the openings are to be closed by steel watertight covers fitted with warning signs stating that "The openings are to be always kept closed. If opened, the motor room is to be sufficiently ventilated."

(3) The motor rooms referred to in the preceding (2) are to be arranged in non-hazardous spaces.

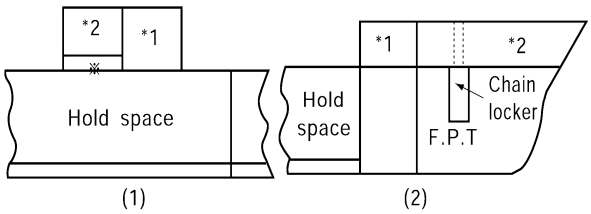

*1 : Cargo pump and cargo compressor room
*2 : Motor room
※ : Cofferdam it is to be needed for the hold space having secondary barrier.

Fig 7.5.11 Non-hazardous spaces in cargo spaces

3. Drainage

Drain plugs provided on the casing walls of the compartment for draining onto the exposed deck may be accepted, as the "Suitable arrangements..... to deal with drainage" referred to in **303. 6** of the Rules.

304. Cargo control rooms 【See Rule】

1. Location

The boundaries where "A-60" class insulation is required according to the requirements in **304. 1** (3) of the Rules are to be as, for example, shown in Fig **7.5.12** of the Guidance. The ceilings and floors of the cargo control room, asterisked in the drawing, are also to be applied with "A-60" class insulation.

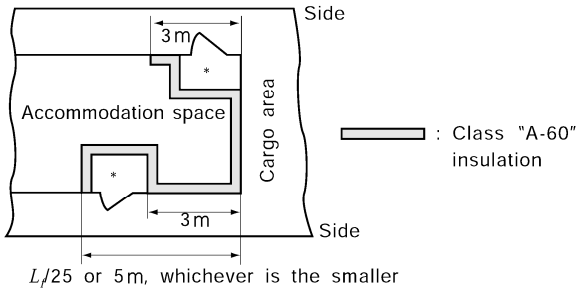

Fig 7.5.12 Insulation in cargo control rooms

2. Source of ignition

For the purpose of the requirements in **304. 3** of the Rules, the electrical installations in the cargo control room are to comply with the requirements in **1002.** of the Rules depending on the location of the room. The cargo control room is to be provided with mechanical ventilation complying with the requirements in **1201.** of the Rules.

305. Access to spaces in the cargo area 【See Rule】

1. Access for inspection of insulation

According to the requirements in **305. 2** of the Rules, neither visual inspection may be required on one side of the insulation in hold spaces of membrane tanks and semi-membrane tanks nor apply the requirements in **305. 3** of the Rules.

2. The minimum clear opening of 600 mm x 600 mm may have corner radii up to 100 mm maximum. In such a case where as a consequence of structural analysis of a given design the stress is to be reduced around the opening, it is considered appropriate to take measures to reduce the stress such as making the opening larger with increased radii, e.g. 600 mm x 800 mm with 300 mm radii, in which a clear opening of 600 mm x 600 mm with corner radii up to 100 mm maximum fits. *(2017)*

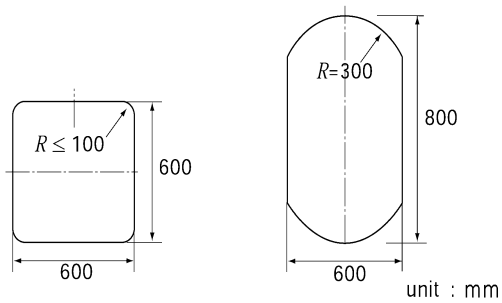

Fig 7.5.13 Minimum opening size

3. The details of minimum opening size required in **305. 3** (1) (C) of the Rules are to be as shown as follows. *(2017)*

(1) The minimum clear opening of not less than 600 mm x 800 mm may also include an opening with corner radii of 300 mm. An opening of 600 mm in height x 800 mm in width may be accepted as access openings in vertical structures where it is not desirable to make large opening in the structural strength aspects, i.e. girders and floors in double bottom tanks.

(2) Subject to verification of easy evacuation of injured person on a stretcher the vertical opening 850 mm x 620 mm with wider upper half than 600 mm, while the lower half may be less than 600 mm with the overall height not less than 850 mm is considered an acceptable alternative to the traditional opening of 600 mm x 800 mm with corner radii of 300 mm.

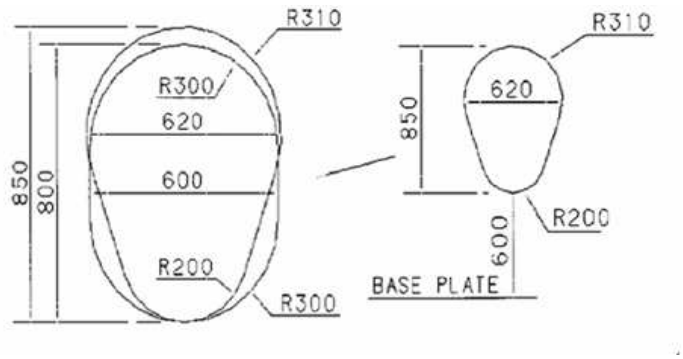

Fig 7.5.14 Acceptable alternative to the traditional opening

(3) If a vertical opening is at a height of more than 600 mm steps and handgrips are to be provided. In such arrangements it is to be demonstrated that an injured person can be easily evacuated.

4. Access to spaces in the hold spaces, etc.

(1) In applying the requirements in **305. 3** (1) (B) of the Rules, type C independent tanks may have the access holes from exposed spaces with a diameter not less than 600 mm.

(2) In case where those tanks can not be provided with the access holes specified in the preceding (1) due to strength reasons in ships with L_f not more than 70 m, they may be replaced with circular holes with a diameter not less than 500 mm or oval holes with equivalent open area. However, they are to be sufficient to allow entry by a personnel wearing protective clothing and to allow unconscious personnel to be removed from the space.

(3) In case where direct or indirect access from open weather deck without access to gas-safe space, the requirements of **305. 3** (1) (B) and (C) of the Rules may not apply to spaces separated from hold spaces described in **105. 23.** (4) of the Rules.

(4) Access hole from weather deck specified in the preceding (3) may be opened at gas-dangerous space. In this case, it is to be applied the requirements for gas-dangerous space except the requirements of **305. 3** (1) (B) and (C) of the Rules.

(5) In applying the requirements in **305. 3** (3) of the Rules, access hole from the weather deck is to comply with the requirements in the preceding (4).

5. Access to gas-safe spaces

"Open weather deck" referred to in the requirements of **305. 4** of the Rules means the exposed part of the uppermost continuous deck within the cargo area.

306. Air-locks 【See Rule】

1. Location of gastight doors

For the purpose of the requirements in **306. 1** of the Rules, the steel doors for air-lock are to be verified for their gas-tightness by hose tests or other means considered appropriate by the Society, as necessary.

2. Drainage

"the Society's guidances" referred to in **306. 2** of the Rules means **IEC 60092-502:1999** or equivalent standards. *(2018)*

3. Maintenance of overpressure in the protected space

For the purpose of the requirements in **306. 4** of the Rules, maintenance of overpressure in spaces protected by air-locks is to be by the differential pressure sensing devices provided within the compartment, but alternatively, either of the following method (1) or (2) may be employed :

(1) The following means are considered acceptable alternatives to differential pressure sensing devices in spaces having a ventilation rate not less than 30 air changes per hour :
(A) monitoring of current or power in the electrical supply to the ventilation motors ; or
(B) air low sensors in the ventilation ducts.

(2) In spaces where the ventilation rate is less than 30 air changes per hour and where one of the means specified in the preceding (1) is fitted, in addition, the arrangements are to be made to de-energize electrical equipment which is not of the certified safe type, if more than one air-lock door is moved from the closed position.

4. Ventilation

(1) For the purpose of the requirements in **306. 1** of the Rules, the ventilating fans for air-lock space and their air intakes are to be provided in the gas-safe space. However, in this case, the ventilating fans may not comply with the requirements in **1201.** of the Rules. Protection screens of not more than 13 mm×13 mm square mesh are to be fitted in outside openings of ventilation ducts.

(2) For the purpose of the requirements in **306. 1** of the Rules, verification of maintenance of pressure in spaces protected by air-locks is to be by, for example, monitoring of current in electrical supply to the ventilation motors, air flow sensors in the ventilation ducts or differential pressure sensing devices. The standard ventilation rate in the air-lock space is 8 air changes per hour.

307. Bilge, ballast and fuel oil arrangements 【See Rule】

1. Drainage arrangements of hold spaces

(1) For the purpose of the requirements in **307. 1** of the Rules, the drainage arrangements of hold spaces are to be of bilge pumps and bilge pipings provided with in the cargo area to be of bilge suction system by eductors.

(2) Where eductors are provided in accordance with the preceding **1**, root valves are to be provided in driving water lines at the aft end of the cargo area, and the branch lines of the driving water line are to be fitted with screw-down check valves.

(3) For the purpose of the requirements in **307. 1** of the Rules, the means to detect gas leakage in hold spaces, when the hold spaces are not inerted, may be commonly used for sounding pipes specified in **Pt 5, Ch 6, 203.** of the Rules. In case where the sounding pipes are provided together with gas leakage detecter, an automatic closing head is to be fitted at the each of upper end of the sounding pipes. When hold spaces are inerted, the requirements in (4) are to be complied with.

(4) For the purpose of the requirements in **307. 2** of the Rules, the drainage arrangements of hold spaces are to comply with the requirements in the preceding (1) and (2). The means of detecting gas leakage in hold spaces is to be of the level alarm system of closed type complying with the requirements in **1302. 2** (3) of the Rules.

(5) Cofferdam and void spaces are also to comply with this Article.

2. Drainage system of interbarrier spaces

For the purpose of the requirements in **307. 3** and **4.** of the Rules, the drainage arrangements for dealing with any leakage into the hold or insulation spaces are to comply with the following requirements (1) through (4) :

(1) Even in the case of a partial secondary barrier which is designed on condition that the total volume of leaked cargo would evaporate, the drainage arrangements are to be provided.

(2) In case where a complete secondary barrier is provided and estimation of leakage of liquid cargo is not carried out, the capacity of the drainage arrangements is to comply with the requirements in **Pt 5, Ch 6, Sec 4** of the Rules.

(3) The drainage arrangements to deal with the leaked cargo may commonly serve as those required in **307. 2** of the Rules.

(4) The piping system of the drainage arrangements of leaked cargo is to comply with the requirements in **Sec 5** of the Rules. The water-driven eductor is not accepted as such arrangement.

3. The requirements of "Pump vents should not be open to machinery spaces" in **307. 5.** apply only to pumps in the machinery spaces serving dry duct keels through which ballast piping passes.

308. Bow or stern loading and unloading arrangements 【See Rule】

1. Arrangements of air inlets and openings

For the purpose of the requirements in **308. 4** of the Rules, the arrangements of air intakes and openings to accommodation spaces are, for example, not to be provided within the shadowed range

in Fig **7.5.15** of the Guidance.

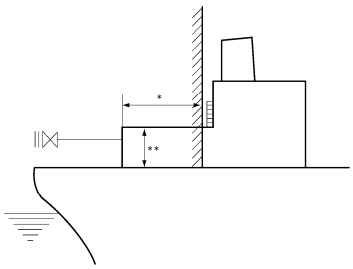

* : 0.04L_f or 3m, whichever is the greater, but need not exceed 5m.
** : To be of the standard height of superstructure prescribed in the 1966 International Load Line Convention or more.

Fig 7.5.15 Arrangement of air inlets and openings

Section 4 Cargo Containment

402. Application *(2021)* 【See Rule】

The requirements of this section of the **Rule** and **Guidance** do not cover all aspects of the design, fabrication and installation of Cargo Containment System.

403. Functional requirements 【See Rule】

1. Corrosion allowances

(1) The corrosion allowance "where there is no environmental control around the cargo tank, such as inerting" referred to in the requirements in **403. 5** of the Rules, in the case of steel, is to be 1 mm. Except for tanks carrying cargoes containing considerable amounts of impurities or corrosive substances such as chlorine and sulfur dioxide, no corrosion allowance may be required for aluminum alloys and stainless steel.

2. Environmental conditions

(1) "North Atlantic environmental conditions and relevant long-term sea state scatter diagrams" referred in the requirements in **403. 2 of the Rules** is in accordance with the wave data in **Pt 3, Annex 3-2 II 5** of the Guidance. (**IACS Rec.34 "Standard wave data"**) *(2018)*

405. Secondary barriers in relation to tank types 【See Rule】

1. Tank type and secondary barrier

The conditions for approving partial secondary barrier for the semi-membrane tanks specified in Note 2 of **Table 7.5.1** of the Rules are to be in accordance with the following (1) through (6) :

(1) Detailed stress analysis is to be carried out. Wave loads as the design load are to be assumed in details according to the requirements in **414. 1** of the Rules. The results of stress analysis are to be verified for the accuracy by measuring the stresses at time of pressure tests on a real ship or model test.
(2) The results of stress analysis under the requirements in the preceding (1) are not to exceed the allowable stress specified in the requirements in **422. 3** (1) of the Rules.
(3) The requirements in **422. 1** (6), (7) and (9) of the Guidance are to be complied with.
(4) Cargo tanks are to be subjected to buckling analysis depending on their structural type whereby it is to be verified that they have sufficient strength against buckling.
(5) Repair procedures for cargo tanks are to be established. On the fatigue strength and crack propagation analysis in case such repair procedures have been applied, assessments are to be carried out by applying the requirements in **422. 4** (6) and (7) of the Guidance correspondingly.
(6) The hull structure adjacent to cargo tanks is to be subjected to strength analysis compatible with the case of cargo tanks. In addition to carrying out detailed stress analysis by the method of which accuracy has been verified by stress measurements, etc., it is to be verified that the strength is sufficient through the fatigue strength analysis and crack propagation analysis done by applying the requirements in **418.** of the Rules correspondingly.

406. Design of secondary barriers 【See Rule】

1. Standards of secondary barrier

(1) For the purpose of the requirements in **406. 2** of the Rule, the secondary barriers of nonmetal material are to conform to the following requirements (A) to (C) :
  (A) Compatibility with the cargo is to have been verified, and to have necessary mechanical properties at the cargo temperature under the atmospheric pressure.
  (B) A model test may be required to prove that the secondary barrier has effective performance when the Society deems it necessary.
  (C) For welded joints, welding procedure tests and production test are to be conducted. The test plans for the above are to have been approved by the Society beforehand.
(2) For the purpose of the requirements in **406. 2** (1) of the Rules, no special analysis of the complete secondary barrier for verifying that "it is capable of containing any envisaged leakage of liquid cargo for a period of 15 days" may be carried out except for cases where the Society

deems it specially necessary.

(3) In principal, openings such as maahole are not to be provided in secondary barriers. *(2022)*

2. Periodical Inspection of Secondary Barrier

(1) With respect to the requirement of **406. 2** (4), it is to be verified that secondary barriers keep a specific level of tightness required in the system design in accordance with an appropriated procedures.

(2) For cargo containment system with glued secondary barriers, at the time of construction, tightness test are to be carried out in accordance with approved system designers' procedure and acceptance criteria before and after initial cool down. The values recorded are to be used as reference for future assessment of secondary barrier tightness. *(2020)*

(A) Low differential pressures tests are not considered an acceptable test.

(B) If the designer's threshold values are exceeded, an investigation is to be carried out and additional testing such as differential pressure, thermographic or acoustic emissions testing is to be carried out as necessary.

(3) For containment systems with welded metallic secondary barriers, at the time of construction, tightness test after initial cool down is not required.

(4) For the purpose of the requirements in **406. 2** (4) of the Rules, the test procedure where visual inspection of the secondary barrier is not possible is to be in accordance with the following requirements (A) to (C) :

(A) The inspection method of the secondary barrier and its criteria relating to the performance to act as the secondary barrier are to be verified for their effectiveness through model test.

(B) The secondary barrier is to be verified by model test for the required performance. This model test is to be capable of verifying that the secondary barrier can maintain the necessary performance throughout the life of the ship.

(C) When sufficient data to prove the effectiveness and reliability relative to the preceding (A) and (B) are submitted to the satisfaction of the Society, this model test may be omitted.

3. Thermal stress analysis for hull structure

(1) For the purpose of requirements in **406. 2** (2) of the Rules, thermal stress analysis is to be carried out for the calculation condition in case of cargo leakage specified in the requirements in **419. 1** of the Rules.

(2) The combined stress of the maximum membrane stress or the maximum bending stress obtained in the analysis of the preceding (1) and the static stress created by the static load specified in the requirements in **403.** of the Rules is not to exceed 90 % of the yield stress of the material.

(3) In the ship designed under the same design temperature and loading conditions of similar ships where it is verified that the thermal stress is sufficiently small, the Society may accept omission of the analysis referred to in the preceding (1).

407. Partial secondary barriers and primary barrier small leak protection system

1. Partial secondary barrier 【See Rule】

(1) For the purpose of the requirements in **407. 1** and **2** of the Rules, the protection of the inner bottom plating at the lower part of cargo tanks is to conform to the following requirements (A) and (B) :

(A) According to the requirements in **406. 1** of the Rules, the inner bottom plating is to act as the secondary barrier.

(B) In case where a drip tray is provided as a secondary barrier for example as shown in **Fig 7.5.16** of the Guidance with consideration so as not to allow the leaked liquid cargo to overflow from the secondary barrier, no protection may be required. However, where no such consideration is taken, the inner bottom plating is to be protected by insulation materials.

(2) The spray shield specified in the requirements in **407. 1** of the Rules is to have been verified by test that it has satisfactory performance to act as the shield.

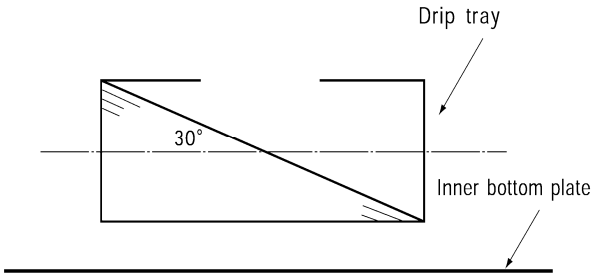

Fig 7.5.16 Drip Tray to protect the inner bottom plate

410. Insulations 【See Rule】

1. General

In spaces between the refrigerated tanks and supports, suitable insulation materials are to be provided so that hull structure might not be cooled excessively through the supporting structures according to the requirement of **419. 1** of the Rules.

413. Functional loads

1. Thermally induced loads 【See Rule】

(1) For the purpose of the requirements in **413. 4** (1) of the Rules, arrangements for cooling down are to be provided so as not to cause excessive stress on the tank structures. (*2019*)

(2) The arrangements shown in the preceding (1) are to be such that safety in cooling down using the arrangements has been proved by records of cargo tanks of similar design or cooling down operation is performed at a rate not exceeding the safe temperature reduction curve which has been proved by thermal stress analysis.

(3) The installations shown in the preceding (1) are to be also capable of performing cooling down at time when excessive thermal loads may be anticipated due to splashing of the residual cargo liquid in ballast passage of the ship under heavy weather as well as at time of cargo loading.

(4) For the purpose of the requirements in **413. 4** (2) of the Rules, no thermal stress analysis may be required for cargo tanks with design temperature of −10°C or upward, in general. In cargo tanks with design temperature at −55°C or below, the structural strength is to be verified through thermal stress analysis by taking into account the vertical temperature distribution at time of cooling down and partial cargo loading, and when necessary, the temperature distribution in the direction of the plate thickness of plating of full loaded tanks.

(5) For tanks other than those specified in the preceding (4), the Society may request thermal stress analysis of the cargo tank by taking into account the constraining condition of the cargo tank by tank supporting structure in case where the tank supporting system is special, and thermal analysis in consideration of the effect of materials with different coefficients of thermal expansion in case where such materials are used.

(6) In the cases referred to in the preceding (4) and (5) where the type of tank supporting system is special, the Society may request thermal analysis on the tank supporting structure itself.

2. Static heel loads 【See Rule】

(1) For the purpose of the requirements in **413. 9** of the Rules, the added mass due to hull damage or flooding may not be considered.

414. Environmental loads

1. Sloshing loads 【See Rule】

(1) For the purpose of the requirements in **414. 3** of the Rules, sloshing loads are to be determined in such a way that assessments are made by model experiment for each type of cargo tanks. For cargo tanks where partial filling is intended, data concerning the resonant period of the hull and natural period of the liquids are to be available on board the ship for avoiding the danger of

resonance.

(2) Notwithstanding the requirements in the preceding (1), in the type C independent tank in ships with L_f not exceeding 90 m, consideration for structural strength of cargo tanks due to sloshing loads may not be necessary. For tanks partial filling is intended, however, sufficient consideration is to be taken for the installation of equipment in cargo tanks such as cargo piping and cargo pump, against impact loads due to sloshing.

418. Design conditions

1. Fatigue design condition **【See Rule】**

(1) For the purpose of the requirements in **418. 2** of the Rules, the stress due to fatigue load may be generally determined by using the cumulative probability curve as shown in Fig **7.5.17**.

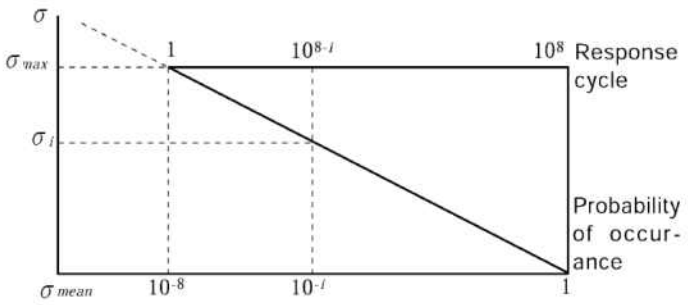

Fig 7.5.17 Cumulative probability curve

(2) When the fatigue strength analysis specified in the requirements in **422. 2** of the Rules is carried out using the frequency distribution of cyclic stress shown in the preceding (1), the number of representative stress(σ_i) is to be eight, and σ_i and its number of repetition n_i may be obtained from the following equation :

$$\sigma_i = \frac{17-2\cdot i}{16}\sigma_{\max}$$

$$n_i = 0.9\times 10^i$$

where :

i : 1, 2, ..., 8

σ_{max} : stress induced by the predicted maximum dynamic load (half amplitude)

(3) For the purpose of **418. 2** (6) (C) of the Rules, the fatigue load used in the calculation of propagation speed of fatigue cracks is, as a rule, to be the predicted maximum load value that can occur at the most severe period in the trade area specified. In case where analysis is made by using the load frequency distribution given in Fig **7.5.13** of the Rules, the number of representative stress(σ_i) is to be set at five and its number of repetition n_i may be obtained from the following equations :

$$\sigma_i = \frac{5.5-i}{5.3}\sigma_{max}$$

$$n_i = 1.8\times 10^i$$

where :

i : 1, 2, . . ., 5

σ_{max} : stress created by the predicted maximum load

(4) The "ships engaged in particular voyages." referred to in **418. 2** (7) of the Rules means those ships with notations "Coasting Service" or "Smooth Water Service" affixed. In this case, the dy-

namic load may be determined by the results of calculation of ship motions carried out on the basis of the data on sea and weather conditions at the navigating area which are considered appropriately by the Society.

419. Materials 【See Rule】

1. Calculation the temperature of hull structures

For the purpose of the requirements in **419. 1** (1) of the Rules, the calculation conditions in computing the temperature of hull structures are to be in accordance with the following (1) through (4) :

(1) The loading condition of the ship for the calculation is to be full loaded condition.

(2) At the upright cargo leakage is to be considered for the calculation in accordance with the following (A) through (D). However, no leakage may be considered for integral tanks and type C independent tanks.

(A) It is to be assumed that the failure of all cargo tanks located between transverse watertight bulkheads are caused. However, in case where the cross section of the ship is divided into more than one compartments by longitudinal bulkheads of the ship, it is to be assumed that the failure of all cargo tanks within each such compartment is caused.

(B) It is to be assumed that the locations of the failure of the cargo tank cover all conceivable ones.

(C) It is to be assumed that only the liquid cargo leaks out where the cargo tank, supports and hull remain intact without involving any deflections or fracture.

(D) For cargo tanks where the complete secondary barrier is required, it is to be assumed that the leakage of liquid cargo occurs instantaneously and the levels of residual liquid cargo in damaged cargo tank and the leaked liquid level in the hold space reach the same level instantaneously.

(3) The boundary conditions of the calculation mode1 are to be in accordance with the following requirements (A) through (K) :

(A) The temperature of the compartment adjacent to hold spaces is to be determined by heat transmission calculation. The atmosphere of the compartment which is adjacent to the compartment contiguous to hold space may be taken as a still air at 0°C. In the case of machinery space, it may be assumed as a still air at 5°C.

(B) It is to be assumed that there is no radiation of sun beam.

(C) The atmospheric air and sea water are to be assumed as still atmospheric air at 5°C and still sea water at 0°C respectively.

(D) The structures in hold space such as insulation materials and supports are to be assumed that they do not absorb liquid cargo.

(E) In compartments where gases exist other than in hold spaces, it is to be assumed that they are in natural convection.

(F) It is to be assumed that the gas and liquid within the same compartment are at the same temperature.

(G) At time of damage to the cargo tank, the gaseous phase in the cargo tank and that in hold spaces are to be assumed to have a pressure equals to the atmospheric pressure.

(H) It is to be assumed that there is no transfer of gases within the insulation materials.

(I) It is to be assumed that there is no influence of moisture.

(J) The temperature of the secondary barrier in a state of leakage is to be assumed to be the same as the cargo temperature at the atmospheric pressure, whereas the temperature of the intact cargo tank is the design temperature. The ship is to be assumed to stay upright.

(K) It is to be assumed that there is no influence of paints.

(4) The calculation conditions in heat transmission calculation are to be in accordance with the following requirements (A) through (I) :

(A) Temperature distribution and heat transmission are to be dealt with as the phenomena in a steady state. No transient condition may be considered.

(B) Sea water is to be assumed to have a density of 1,025 kg/m^3 and a coagulation point of 2.5°C with physical properties compatible with those of fresh water for other items.

(C) The liquid cargo is to be assumed to have uniform temperature distribution.

(D) The heat transfer coefficients at various boundaries can be computed by using the numeral values given in **Table 7.5.1** of the Guidance, but calculation may be carried out by using empirical equations given in the heat transfer engineering data which has been made public.

In this case, heat transfer due to radiation is also to be taken into account.

Table 7.5.1 The Heat Transfer Coefficient at Various Boundaries

Boundaries	Heat transfer coefficients ($W/m^2 \cdot °C$)
Still gas ← → Hull or liquid	5.8
Still sea water ← → Hull	116.3
Cargo vapour ← → Hull contacted to air	11.6

(E) The substance for which temperature distribution is investigated is to be assumed to be of homogeneous one without directivity.
(F) Frames may be dealt with as fins.
(G) In case where hold spaces located forward and afterward the hold space under study are in the same conditions, they may be treated as a two dimensional problem.
(H) The cooling effect by the latent heat of evaporation of the liquid cargo may not be taken into account.
(I) The temperature of structural members is to be represented by the temperature at their half thickness, and for individual members, the following requirements (a) through (d) are to be complied with :
  (a) The temperature of those frames fitted to plates is to be assumed to be the same as the temperature of the plates, but when the temperature distribution of the frame in the direction of depth is known, the area mean of the temperature distribution may be taken.
  (b) The temperature of web frames supporting frames or plates is to be the temperature at their half depth for webs, and the temperature of face plates for these.
  (c) The temperature of members connecting the inner shell and outer shell, e.g., brackets and girders is to be of the mean of the temperature of the inner shell and that of the outer shell.
  (d) The temperature of brackets is to be the temperature at their centroid.

2. Hull material not forming secondary barrier

(1) For the purpose of the requirements in **419. 1** (3) of the Rules, brackets, panel breakers on such as girders, tripping brackets and docking brackets provided to prevent buckling of structural members may be excluded from the application of the requirements.
(2) Notwithstanding the requirements in the preceding (1), for longitudinal strength members and stiffeners in deep tanks and watertight bulkheads among those shown above the requirements apply.

3. Heating system *(2019)*

(1) Heating system referred to in **1.** (6) (A) of the Rules is to be such that in case of a single failure of a mechanical or electrical component in any part of the system, heating can be maintained at not less than 100% of the theoretical heat requirement.
(2) Where the above requirements are met by duplication of the system components, i.e., heaters, glycol circulation pumps, electrical control panel, auxiliary boilers etc., all electrical components of at least one of the systems are to be supplied from the emergency source of electrical power.
(3) Where duplication of the primary source of heat, e.g., oil-fired boiler is not feasible, alternative proposals can be accepted such as an electric heater capable of providing 100% of the theoretical heat requirement provided and supplied by an individual circuit arranged separately on the emergency switchboard. Other solutions may be considered towards satisfying the requirements of **1.** (6) (A) of the Rules provided a suitable risk assessment is conducted to the satisfaction of the Administration. The requirement in (2) continues to apply to all other electrical components in the system.

4. Insulation materials

(1) For the purpose of the requirements in **419. 3** (1) of the Rules, insulation materials of independent tanks and integral tanks are to be free from generating harmful defects that degrade the insulation performance even under such conditions of service that can actually take place in

insulation structure including forced deflection and thermal expansion and contraction.

(2) The performance referred to in the preceding (1) is to be verified in the insulation procedure test specified in **8** below as necessary.

5. Protection of insulation

For the purpose of the requirements in **419. 3** (4) of the Rules, insulation materials are to be protected in accordance with the following requirements (1) to (3) :

(1) For insulation materials installed in hold spaces and tank covers, no fire protections and protections for mechanical damage may be provided except for cases where such are specially necessary. However, these insulation materials are to be applied with coating or subjected to surface treatment with aluminium foil, etc.

(2) Insulation materials provided at exposed areas are to be protected by galvanized iron sheets or to be of the non-combustible insulation materials specified in the requirements in **Pt 8, Ch 3, 201.** of the Rules applied with moisture-resistant coating. In case where the Society deems necessary, provision of steel covering may be requested as a protection against mechanical damage.

(3) The coating materials to be applied on the surface of insulation materials are to comply with the requirements in **Pt 8, Ch 4, Sec 1** of the Rules or equivalent.

6. Properties of insulation materials

(1) For the purpose of the requirements in **419. 3** (2) of the Rules, the properties of insulation materials are, in general, to be verified by the tests given in **Table 7.5.4** of the Guidance.

(2) In addition to complying with the requirements in the preceding (1), property verification test may be requested by the Society depending on the insulation system.

(3) If the material, which has been approved according to the Guidance given by the Society, satisfies the performance requirements and such performance is considered to serve the purpose, the tests referred to in the preceding (1) may be omitted.

(4) For insulation materials to which the requirements in the preceding (1) to (3) do not apply, the following requirements (A) and (B) are to be complied with :

(A) For insulation materials used for supports of independent tanks, the requirements given in the column of membrane tank and semi-membrane tank in **Table 7.5.3** of the Guidance apply.

(B) For insulation materials provided in cargo tanks to which no provision of insulation is required according to the requirements in **410.** of the Rules, data on the necessary properties of those specified in **419. 3** (2) of the Rules depending on the insulation system is to be submitted to the Society.

(5) The test method for the properties specified in **419. 3** (2) of the Rules is to be **Table 7.5.4** of the Guidance or to the satisfaction of the Society.

7. Use of low Temperature material for equipments at Low temperature area is as follows.

Table 7.5.2 Use of low Temperature material for equipments at Low temperature area

~ welded to / Equipment		Primary Barrier	Secondary Barrier and interbarrier	Back space of Secondary Barrier	Other
Pad		Low Temperature steel	Low Temperature steel	NA	NA
Equipment	without Pad	Low Temperature steel	Low Temperature steel	NA	NA
	with Pad	Low Temperature steel	NA	NA	NA
cargo hold, manhole (including cover, coaming, excluding fitting)		Low Temperature steel	Low Temperature steel	NA	NA

Table 7.5.3 Properties of Insulation Material for Cargo Tank Types *(2019)*

No.	Ensuring items		Integral tank	Membrane/ semi-membrane tank[3]	Type A/B independent tank	Type C independent tank	Note
1	Compatibility with the cargo			○[1]	○[1]		
2	Solubility in the cargo			○[1]	○[1]		
3	Absorption of the cargo		□	○[1]	○[1]		
4	Shrinkage			○[1]	○[1]		
5	Aging		□	○	○[1]	□	
6	Closed cell content		△	△	△	△	applied only to closed cell material
7	Density		○	○	○	○	
8	Mechanical properties	Bending strength	○	○	○	○	
		Compress. strength		○			
		Tensile strength	○	○	○	○	
		Shearing strength	○	○			
9	Thermal expansion		□	○	○[2]	○[2]	
10	Abrasion			○			
11	Cohesion		□	△	△[1]	□	applied to cohered material
12	Thermal conductibility		○	○	○	○	
13	Resistance to vabration		△	△	△[1]		refer to **419. 3 (7)** of the Rules
14	Resistance to fire and flame spread		○	○	○	○	
15	Resistance to fatigue failure and crack propagation			△			

Remarks
○: Items to be verified through verification test for properties.
△: Items to be verified through verification test where deemed necessary depending on the insulation material.
□: Items for which preparation of data on the properties is desirable.
Notes :
1) Necessary when the insulation material acts as spray shield specified in the requirements in **407. 1** of the Rules. In other cases, data on the properties is to be prepared.
2) Not generally required for cargo tanks where the design temperature exceeds −10°C.
3) It is necessary to verify the fatigue strength characteristics.

Table 7.5.4 Test Items for Insulation Materials *(2019)*

Test items	Test methods
1. Compatibility with the cargo	Tensile, compress., shearing, bending test after dipping in the cargo (DIN 53428)
2. Solubility in the cargo	Changes in thesize and weight of test specimen before and after dipping in the cargo (DIN 53428)
3. Absorption of the cargo	Comparison of weight of test specimen or test of water absorbing properties before and after dipping in the cargo (DIN 53428)
4. Shrinkage	ISO 2796, ASTM D 2126
5. Aging	–
6. Closed cell content	ISO 4590, ASTM D 2856, D 6226
7. Density	ISO 845, ASTM D 1622
8. Mechanical properties	Bending (ISO 1209, ASTM C 203, D 790) Compress.(ASTM D 695, D 1621) Tensile (ISO 1926, ASTM D 638, D 1623) Shearing (ISO 1922, ASTM C 273)
9. Thermal expansion	ASTM D 696, E 831
10. Abrasion	–
11. Cohesion	ASTM D1623
12. Thermal conductibility	ISO 8302, KS L 9016, ASTM C 177, C 518
13. Resistance to vibration	ISO 10055
14. Resistance to fire and flame spread	DIN 4102
15. Resistance to fatigue failure and crack propagation	_

8. Quality control of insulation materials

Control of Manufacture, storage, handling, assembly, quality control and effect from exposure of the sun is as shown in the following (1) and (2):

(1) The insulation materials are to be approved in accordance with the Guidance. In the above, tests and inspection are to be conducted according to the procedures on the manufacture, storage, handling and product quality control established by the manufacturer.

(2) The inspection for insulation work is to include the following items of tests and inspections (A) to (C):

(A) Insulation procedure test
For insulation system and insulation procedure without previous records, tests are to be conducted in accordance with the test plan approved by the Society. The test may be conducted at the manufacturer of insulation materials or shipyard as necessary.

(B) Insulation production test
In accordance with the test plan approved by the Society in advance, tests are to be conducted to verify the work control, working environment control and product quality control during insulation procedure.

(C) Completion inspection
After the insulation work is completed, inspection is to be conducted for dimensions, shape, appearance, etc. in accordance with the procedures already approved by the Society, and in addition, the insulation performance is also to be verified in the test specified in **420. 3** (5) of the Rules.

9. Materials of primary and secondary barriers

(1) The high manganese austenitic steel for cargo tank is to comply with **Annex 7A-4**. *(2023)*

420. Construction processes 【See Rule】

1. Independent tanks

(1) For the purpose of the requirements in **420. 1** (1) of the Rules, the fillet weld of the full penetration type approved for joints between cargo tank plates and dome are, at least, to conform to the following requirements (A) or (B) depending on cargo tank type :
  (A) In the case of Type A independent tank, non-destructive testing procedure is to be established.
  (B) In the case of Type B and Type C independent tank, records of production are to be kept and fatigue strength is to be ensured by fatigue strength analysis and non-destructive testing procedures established for the proposed construction.

(2) The "dome-to-shell connections" referred to in the requirements in **420. 1** (1) of the Rules are applicable to tanks with MARVS is 0.07 MPa or below, and the connections mean ordinary cargo pipes or other penetrations of equivalent size sufficiently small when compared with the size of dome.

(3) The requirements in **420. 1** (1) of the Rules is applicable to independent tanks of type A or type B, primarily constructed of plane surfaces. This includes the tank corners which are constructed using bent plating which is aligned with the tank surfaces and connected with in-plane welding.
  (A) The applicability of the expression “For dome-to-shell connections only” is clarified as follows:
    (a) Welded corners(i.e. corners made of weld metal) shall not be used in the main tank shell construction, i.e. corners between shell side(sloped plane surfaces parallel to hopper or top side inclusive if any) and bottom or top of the tank, and between tank end transverse bulkheads and bottom, top or shell sides(sloped plane surfaces inclusive if any) of the tank. Instead, tank corners which are constructed using bent plating aligned with the tank surfaces and connected with in-plane welds are to be used.
    (b) Tee welds can be accepted for other localised constructions of the shell such as suction well, sump, dome, etc. where tee welds of full penetration type shall also be used.

(4) In welding of the penetrations referred to in the preceding (2) full penetration type welding may not be required, but are to have proper grooves. In this case, all the weld lines for penetrations of pipes with outside diameter exceeding 100 mm, and the partial weld lines for those with outside diameter of 100mm or below, are to be subjected to non-destructive test as appropriate.

(5) The requirements in **420. 1** (2) of the Rules is applicable to type C independent tanks including bi-lobe tanks, primarily constructed of curved surfaces fitted a centreline bulkhead. The applicability of the expression “Other edge preparations” is clarified as follows.
  (A) Cruciform full penetration welded joints in a bi-lobe tank with centreline bulkhead can be accepted for the tank structure at tank centreline welds with bevel preparation subject to the approval of the Society, based on the results of the tests carried out at the approval of the welding procedure.(See below example)

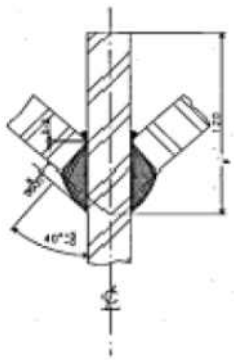

(6) The "specifically approved by the Society" referred to in the requirements in **420. 1** (2) (A) of the Rules means the case of tanks where MARVS is 1.0 MPa or below and the design temperature is higher than −10°C satisfying both of the following requirements (A) and (B). However, this is to be limited to areas where non-destructive test is possible.
  (A) Pressure vessels where removal of backing strip is operationally difficult and which are not used in an atmosphere liable to generating stress corrosion cracks.
  (B) There is no excessive stress concentration.

2. Membrane tanks

(1) For the purpose of the requirements in **420. 3** of the Rules, quality assurance procedure, welding control, design details, quality control of materials, construction method, inspection and standards of production testing of components for membrane tanks are to be developed during the prototype test specified in **424. 8** of the Rules or another prototype test separately conducted for development of production procedure, and their effectiveness is to be verified. The relevant data is to be noted in the construction procedure manual for cargo tanks including the insulation construction of membrane tanks.

(2) The construction procedure manual referred to in the preceding (1) is to be approved by the Society after being verified through prototype test.

3. Stress measurements instrumentation of type B independent tanks

For the purpose of the requirements in **420. 3.** (4) of the Rules, in case where stress measurements of the cargo tank previously built which can be regarded as the tank of the same design manufactured at the same shipyard had resulted in good agreement with design stress levels, provision of instrumentation of independent tanks stress levels for tanks subsequently built may be omitted.

4. Verification before and after the first loaded voyage *(2024)*

In accordance with the requirements in **420. 3** (5) to (7), **513. 2** (5) and **1303. 5** of the Rules, surveyor attendance is required at the first cargo loading and first cargo unloading. Surveyor attendance during new building gas trials can be considered to comply with the below applicable verifications and examinations survey requirements, with the exceptions of the survey requirements marked (**).1

(1) Verifications and examinations at first full cargo loading, as applicable to cargo containment system

Note: When attending at first full cargo loading, priority shall be given to latter stages of loading;

- verify the satisfactory functionality of the emergency shutdown system during testing;
- satisfactory operation of gas detection system;
- satisfactory operation of cargo tank pressure monitoring system;
- satisfactory operation of inter barrier space(s) and insulation space(s) pressure monitoring system, as applicable;
- satisfactory operation of cargo tank temperature monitoring system;
- satisfactory operation of cargo tank level indicating system;
- satisfactory operation of inter barrier space(s) and inner hull temperature monitoring system, as applicable;
- inert gas generator, if operating;
- nitrogen generating plant, if operating;
- nitrogen pressure control system for insulation, interbarrier, and annular spaces, as applicable;
- reliquefaction plant, if fitted;
- equipment fitted for the burning of cargo vapours such as boilers, engines, gas combustion units, etc., if operating;
- examination of on-deck cargo piping systems including expansion and supporting arrangements;
- verification and examination of all piping systems, including valves, fittings and associated equipment for handling cargo or vapours[2]
- advise Master to carry out cold spot examination of the hull and external insulation during transit voyage to unloading port and record in ship's logbook;
- advise Master to test high-level alarm(s) with liquid cargo during voyage and record in ship's logbook, when loading condition permits.
- satisfactory operation of cargo compressors;

(2) Verifications and examinations at first full cargo unloading, as applicable

Note: When attending at first full cargo unloading, priority shall be given to the commencement of unloading.

- examination of on-deck cargo piping systems including expansion and supporting arrangements;
- review logbook entry of emergency shutdown system testing prior to commencement of unloading;

- (**) review cargo logs and alarm reports for cargo tank pressure, temperature, and level indicating systems;
- satisfactory operation of cargo compressors;
- satisfactory operation of cargo pumps;
- inert gas generator, if operating;
- nitrogen generating plant, if operating;
- nitrogen pressure control system for insulation, interbarrier, and annular spaces, as applicable;
- (**) review of records for satisfactory operation of the reliquefaction plant, if fitted;
- review of records for equipment fitted for the burning of cargo vapours such as boilers, engines, gas combustion units, etc.;
- (**) on ships fitted with membrane tanks, review records of the cofferdam and inner hull temperature sensors to verify the readings are not below the allowable temperature for the selected grade of steel;
- (**) cofferdam heating system, if in operation;
- (**) review logbook entries for cold spot examination; and
- (**) review logbook entry for testing of high-level alarm(s) with liquid cargo. If cargo conditions did not permit testing, surveyor to require testing at the first occasion where cargo conditions allow for testing. Master to be advised to record testing in ship's logbook which is to be verified no later than the first annual survey.

(3) Documentation to be requested to the Master
To demonstrate satisfactory functionality of the verifications, ship's Master shall be required to arrange and provide to the surveyor print outs or screen shots showing:

- trends of cargo tanks pressure and temperature;
- trends of pressure and temperature distribution of inter-barrier space(s) and insulation space(s), and temperature distribution of inner hull, as applicable;
- trends record of performance of cofferdam heating system, when fitted;
- trends record of consumption of nitrogen gas, and whether any abnormality has been observed;
- list of any gas alarms, if occurred;
- Cargo Tanks Containment System Cold Spot Inspection Statement; and
- activation of Cargo Tanks High-Level Alarm and Overfill Protection tests.

Note 1: The symbol (**) indicates survey requirements only feasible to be carried out at the time of first full cargo loading/unloading.
Note 2: Refer to **Table 7.5.5** Test Items at the Gas Trial.

Table 7.5.5 Test Items at Gas Trial

Test item	◎ : Attendance of the Surveyor ○ : Submission of record	Inspection equipment	Survey item
1. Drying test	○	· Inert gas generator	· Dew point · Change of dryness in cargo tanks and hold spaces
2. Inerting test	○	· Inert gas generator	· Operation of the inert gas generator · Measuring of atmosphere in cargo tanks
3. Inert gas purge test using cargo vapour	○	· Cargo vapourizer · Compressor	· Change of O_2/temperature of cargo vapour in cargo tanks · Quantity of cargo vapour (or liquid) supply · Capacity of the vapourizer · Capacity of the compressor
4. Cool-down test	◎/○	· Spray pump · Compressor · Cargo piping · Temperature indicators forcargo tank · Spray piping	· Temperature curve of cargo tanks[1)] · Inspection of hold spaces/condition of insulation of tanks (after cool-down) · Cooling condition of spray piping·Cooling condition of cargo piping · Capacity of spray pump · Cargo consumption · Capacity of compressor (property of return gas) · Temperature/pressure in cargo tank · Shrinkage of cargo tank[2)]
5. Loading test of cargo liquid	◎/○	· Compressor · Cargo piping related for loading · level gauge/temperature indicator	· Temperature/pressure level in cargo tanks · Temperature/pressure in hold spaces · Temperature/pressure of cargo liquid/gas at manifolds · Service condition of cargo piping
6. Operation test of cargo pump	◎/○	· All cargo pumps	· Discharge pressure/current of cargo pumps · Liquid level/pressure in cargo tanks · Stripping
7. Operation test of pressure/temperature control system	◎/○	· Depend on the type of controls	· Depend on the type of controls

Notes :
1) The Society may approve omission in consideration of the quality control status and manufacturing records of the insulation materials.
2) To be verified only in the case of independent tanks.

5. Cold spot inspection

(1) The cold spot inspection of cargo tanks specified in **420. 3** (7) of the Rules is to be carried out during the cargo full loading test to capacity specified in **420. 4** for the membrane tank, semi-membrane tank, internal insulation tank, and when necessary, independent tank.

(2) The cold spot inspection of cargo tanks specified in the preceding (1) may be confirmed when the inspection for discharging operation is carried out.

6. Additional information on the gas-trial and cargo full loading test *(2024)*

(1) Test:

(A) Gas-trial

The tests are to be conducted to verify the performance of the cargo containment system cargo handling equipment and instrumentation using a suitable quantity of the cargo after the completion of all the construction work. Refer to **Table 7.5.5** for test items. However, for cargo tanks which do not require either cool-down operations or the cargo pressure / temperature control specified in **Section 7 701. 1 of the Rules,** the omission of this gas trials may be accepted if substitution is made by the operating test with the substituting medium at manufacturing plants or shipyards to verify the requirements given in **Table 7.5.5** of the Guidance except for the case where the tank is of the first cargo tank manufactured by the manufacturer of cargo tanks.

(B) Cargo full loading test

The tests are to be conducted after completion of all the construction work to verify that the cargo containment installations, cargo handling equipment and instrumentation satisfy the design conditions under the fully loaded condition of cargo.

(2) The kinds of real liquid cargo and gas used in the gas-trial and cargo full loading test specified in the preceding (1) are to be such that reproduction of the most severe conditions of those design conditions of the cargo containment system, the transfer installations, the reliquefaction system, etc. and consideration is to be given to the following requirements (A) and (B) :

(A) The verification relative to design temperatures is to be made by reproducing the condition that the cargo on the basis of which design temperature has been determined is cooled down as close to the design temperature as practicable.

(B) For design conditions basing on the corrosivity or extreme toxicity, omission of verification through the use of these cargoes in gas-trial may be accepted in case where experimental data and information to prove the compliance of the construction and equipment including structural materials have been submitted to the Society.

(3) The quantities of the real cargo and vapour used in the gas-trial and cargo full loading test referred to in the preceding (1) are to be sufficient to conducting the tests specified in (1) above.

421. Type A independent tanks 【See Rule】

1. Design basis

(1) "Recognized standards" of the requirements in **421. 1** (1) of the Rules means normally the requirements in **Pt 3, Ch 15** of the Rules.

2. Structural analysis

(1) For the purpose of the requirements in **421. 2** (1) of the Rules, the corrosion allowance may be reduced or may not be required in accordance with the requirements in **403. 5** of the Rules. In structures where the membrane or axial force due to internal pressure can not be neglected, the calculation equation specified in **Pt 3, Ch 15** of the Rules may be used after suitable modification.

(2) In case where no corrosion allowance specified in **403. 5** of the Rules is required in accordance with the preceding (1), stiffeners may have section modulus more than 1/1.2 of one required in **Pt 3, Ch 15, Sec 2** of the Rules.

(3) For the purpose of the requirements in **421. 2** (2) of the Rules, the following (A) to (C) are to be considered for loads and ship deflections.

(A) Ship deflections due to longitudinal bending moment in waves and longitudinal still water bending moment.

(B) Ship deflections due to horizontal bending moment in waves and twisting moment, when necessary due to type of supporting structures.

(C) Internal pressure specified in **428. 1** of the Rules.

3. Allowable stresses *(2023)*

(1) The "classical analysis procedures" referred to in the requirements in **421. 3** (1) of the Rules means the beam theory where the type of stress to be assessed is the combined stress of bending stress and axial stress.

4. Hydrostatic or hydropneumatic test for independent tank

(1) For the purpose of the requirements in **421. 5** and **422. 6** of the Rules, the hydrostatic or hydropneumatic test of cargo tanks is to be conducted by simulating the actual load conditions (static load + dynamic load) in accordance with the following requirements (A) and (B) :

(A) Test of cargo tanks
Hydrostatic-hydropneumatic test is to simulate the static pressure of cargo, acceleration by ship motions and internal pressure including the vapour pressure by water head and pneumatic pressure. (See Fig **7.5.18**, **7.5.19** and **7.5.20** of the Guidance)

(B) Load test of supporting structures
Hydraulic test is to simulate the cargo weight and the load created by the acceleration due to ship motions solely by the weight of water. (See Fig **7.5.21** of the Guidance)

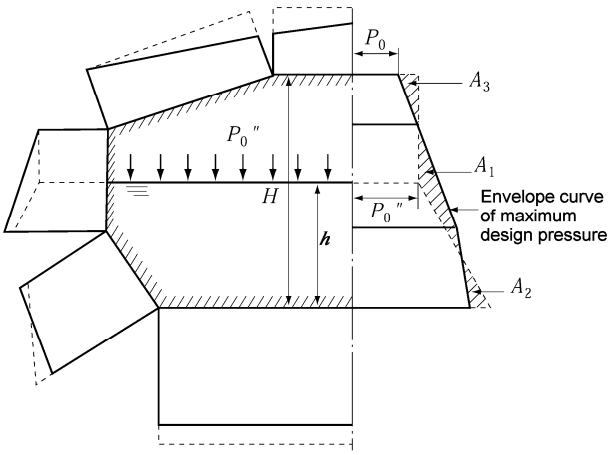

Fig 7.5.18 Simulating the Internal Pressure Distribution of Rectangular Tank

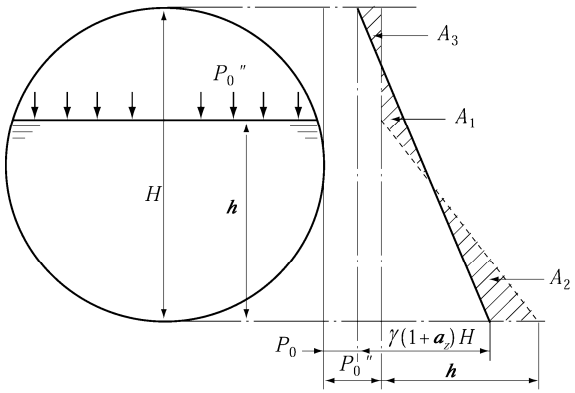

Fig 7.5.19 Simulating the Internal Pressure Distribution of Spherical Tank

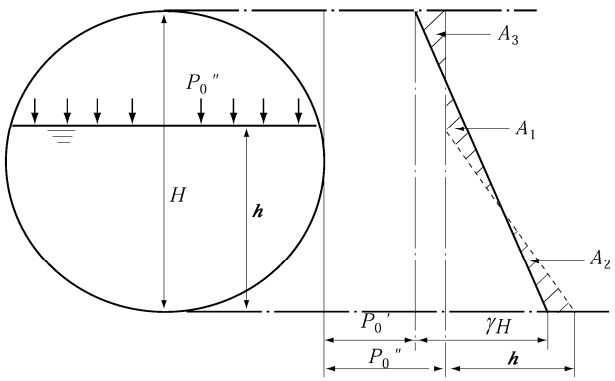

Fig 7.5.20 Simulating the Internal Pressure Distribution at Pressure Discharge

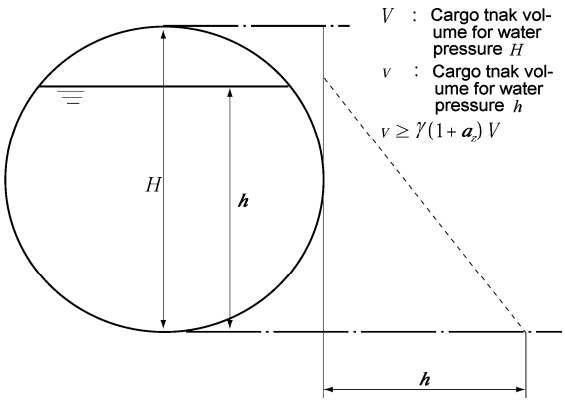

Fig 7.5.21 Simulating the Loading Condition of Support Structure

* Explanatory notes on symbols in Fig **7.5.18** to **7.5.21** of the Guidance
------ : maximum loading condition which is predicted to actually encounter
··· : pressure testing condition simulating as far as practicable (P_0'' and h are to be chosen so that $P_0'' > P_0$ or $P_0'' > P_0'$ and $A_2 + A_3 > A_1$ as far as practicable)

H : depth of tank
h : water head
γ : specific gravity of cargo
a_z : maximum vertical acceleration (non-dimensional)
P_0 : design vapour pressure at ordinary passage
P_0' : design vapour pressure during pressurized unloading in port
P_0'' : air pressure

(2) All tests specified in the preceding (1) (A) and (B) may be conducted individually.
(3) In the case of the cargo tank of supports which can be regarded as those of the same type manufactured at the same manufacturing plant, implementation of the second and subsequent tests of supports specified in the preceding (1) (B) may be omitted when deemed acceptable by the Society.

5. Structural Test and Tightness test for cargo tanks

In case where leakage of cargo tanks can not be inspected in the hydraulic test or hydrostatic-hydropneumatic test according to the requirements in **421. 5** of the Rules, the tightness test of cargo tanks is to be conducted separately. This test is to be of the airtightness test conducted at a pressure of MARVS or more of the cargo tank.

422. Type B independent tanks 【See Rule】

1. Structural analysis

In applying the requirements in **422. 2** of the Rules, the following requirements (1) through (10) are to be complied with :

(1) The cargo tank structure is to be analyzed by three dimensional frame structural analysis method or finite element method. The model for the analysis is to include concerned hull structures and support construction considering ship deflections and local deflections of hull due to vertical, horizontal and twisting moments.
(2) The strength members of cargo tanks are to be computed in details by the finite element method. In case where compatible results can be obtained, however, the frame structural analysis method may be used in replacement therewith.
(3) In the preceding (1) and (2), dynamic loads necessary for the calculation of interactions between the hull and cargo tanks specified in **422. 2** (2) of the Rules are, as a rule, to be determined by long-term distribution in accordance with the requirements in **414. 1** and **422. 2** (3) of the Rules where the most probable largest load in terms of the probability of occurrence as deemed appropriate by the Society is to be used. The dynamic stress(σ_{dyn}) due to such loads are to be evaluated for their phase difference according to the requirements in **417. 3** of the Rules, and the total stress including dynamic stress is to be the sum of such dynamic stress and static stress(σ_{st}). However, the load within cargo tanks may be considered as the internal pressure specified in the requirements in **428. 1** (2) of the Rules by using the value of long-term distribution of acceleration computed by direct calculation according to the requirements in **414. 1** and **422. 2** (3) of the Rules.
(4) The scantlings of cargo tank plates and stiffeners fitted to tank plates are to the satisfaction of the Society in consideration of the stress distribution and the mode of stress.
(5) In case where bulkheads are provided in cargo tanks, the scantlings of bulkhead plates and stiffeners fitted to the bulkhead plates are to the satisfaction of the Society.
(6) The strength members in cargo tanks are to be subjected to fatigue strength analysis for both the base metal and welded joints of high stress regions and stress concentration regions. S-N curves are to be plotted by experiment by the taking into account the following (A) through (F) :
(A) Shape and size of test specimen
(B) Stress concentration and notch sensitivity
(C) Mode of stress
(D) Mean stress
(E) Welding conditions
(F) Ambient temperature
In the experiment, the number of test specimen is to be determined statistically and S-N curves are to be plotted against non-destruction probability P = 50 %.

(7) Relative to the design standards for the secondary barrier, the crack propagation analysis specified in the requirements in **422. 2** (1) of the Rules is to be carried out to verify that the assumed initial cracks would not reach the critical crack length in a period. The rate of cargo leakage is to be computed on the basis of the crack length obtained by this analysis.
(8) It is to be verified that the cargo tank plates and associated structural members have sufficient strength against compressive buckling, tripping buckling of stiffeners, shearing buckling, and bending buckling of tripping brackets.
(9) The cargo tank plates and stiffeners are to have such scantlings as not to be caused harmful effects by resonance with the vibrations of exciting sources. The natural frequencies of the cargo tanks and stiffeners used in the above assessment are to be the minimum values in a state in contact with cargo liquid.
(10) The accuracy in stress analysis is to be verified by model tank test or pressure measurements taken at time of pressure tests on a real ship in accordance with the requirements in **420. 3** (4) of the Rules.

2. Allowable stresses

(1) For the purpose of the requirements in **422. 3** (1) (B) of the Rules, the allowable stress for the primary stress of the prismatic Type B independent tanks is to be in accordance with the requirements in **422. 3** (1) (A) of the Rules.
(2) For the purpose of the requirements in **418. 1** (3) of the Rules, the values of R_e and R_m when the strength of welds is less than that of the parent metal as in the case of 9 % nickel steel are to be of the required values of mechanical properties of the weld metal. For welded joints of aluminium alloys R5083-O and R5083/5183 and 9 % nickel steel, the values of R_e and R_m may be modified in consideration of the increase in the yield stress and tensile stress at low temperature after taking into account the welding procedure employed.
(3) For the purpose of the requirements in **422. 3** (1) (C) of the Rules, if 9% nickel steel is used for the plates of the cargo tank, the allowable stress $R_e/1.33$ is applied to the calculation of the tank plates. *(2021)*

3. Structural Test and Tightness test for cargo tanks

(1) Refer to the requirements in **421. 4** and **5**.

423. Type C independent tanks 【See Rule】

1. In applying the requirements of **423. 1** (2) of the Rules, if the carriage of products (it is only applicable to products having a relative density exceeding 1.0) not covered by the requirements in **Pt 7, Ch 5** of the Rules is intended, the following requirements (1) and (2) are to be complied with : *(2017)*

(1) The double amplitude of the primary membrane stress $\Delta\sigma_m$ created by the maximum dynamic pressure differential ΔP is not to exceed the allowable double amplitude of the dynamic membrane stress $\Delta\sigma_A$ as specified in **423. 1** (2) of the Rules, ie: $\Delta\sigma_m \leq \Delta\sigma_A$.
(2) The dynamic pressure differential ΔP is to be calculated as follows:

$$\Delta P = \rho(a_{\beta 1}Z_{\beta 1} - a_{\beta 2}Z_{\beta 2})/(1.02 \times 10^5) \quad (\mathrm{MPa})$$

ρ is maximum liquid cargo density in $\mathrm{kg/m^3}$ at the design temperature
a_β, Z_β are as defined in **428. 1** (2) of the Rules, see also **Fig 7.5.22** of the Guidance.
$a_{\beta 1}$, $Z_{\beta 2}$ are the a_β and Z_β values giving the maximum liquid pressure $(P_{gd})max$
$a_{\beta 2}$, $Z_{\beta 2}$ are the a_β andZ_β values giving the minimum liquid pressure$(P_{gd})min$

In order to evaluate the maximum pressure differential ΔP, pressure differentials is to be evaluated over the full range of the acceleration ellipse as shown in **Fig 7.5.22** of the Guidance.

2. Structural analysis

(1) For the purpose of the requirements in **423. 2** of the Rules, for the scantlings, shapes and reinforcements of openings of cargo tanks against internal pressure in cargo tanks, the requirements for Class 1 pressure vessels in **Pt 5, Ch 5** of the Rules apply.

(2) P_4 among design external pressure P_0 is to be the value computed by applying the requirements in **Pt 3 Ch 10 Sec 2, Pt 3 Ch 16 Sec 2** and **Pt 3 Ch 17 Sec 2** of the Rules corresponding to the location of the tanks.

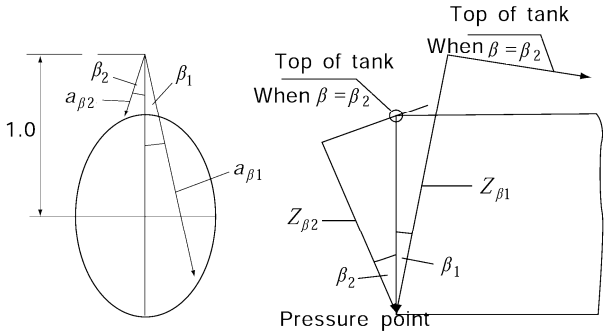

Fig 7.5.22 Acceleration Ellipse and Evaluation of Pressure Differentials

3. Allowable stresses *(2017)*

The circumferential stresses at supports shall be calculated by a procedure acceptable to the Classification Society for a sufficient number of load cases.

(1) Permissible stresses in stiffening rings:
For horizontal cylindrical tanks made of C-Mn steel supported in saddles, the equivalent stress in the stiffening rings shall not exceed the following values if calculated using finite element method:

$$\sigma_e \leq \sigma_{all}$$

where:

$$\sigma_{all} = \min(0.57R_m; 0.85R_e)$$

$$\sigma_e = \sqrt{(\sigma_n + \sigma_b)^2 + 3\tau^2}$$

σ_e : equivalent stress($\mathrm{N/mm^2}$)

σ_n : nominal stress in the circumferential direction of the stiffening ring ($\mathrm{N/mm^2}$)

σ_b : bending stress in the circumferential direction of the stiffening ring ($\mathrm{N/mm^2}$)

τ : shear stress in the stiffening ring ($\mathrm{N/mm^2}$)

0.57 R_m or 0.85 R_e

R_m and R_e as defined in **418. 1** (3) of the Rules

Equivalent stress values σ_e is to be calculated over the full extent of the stiffening ring by a procedure acceptable to this Society, for a sufficient number of load cases as defined in **413. 9**, **414. 2** and **415.** of the Rules.

(2) The following assumptions are to be made for the stiffening rings:
(A) The stiffening ring is to be considered as a circumferential beam formed by web, face plate, if any, and associated shell plating.
The effective width of the associated plating should be taken as:
(a) For cylindrical shells:
an effective width (mm) not greater than $0.78\sqrt{rt}$ on each side of the web.
A double plate, if any, may be included within that distance.
where:
r : mean radius of the cylindrical shell (mm)
t : shell thickness (mm)
(b) For longitudinal bulkheads (in the case of lobe tanks):
the effective width (mm) is to be determined according to established standards.

A value of 20 t_b on each side of the web may be taken as a guidance value.
where:
t_b : bulkhead thickness (mm)

(b) The stiffening ring is to be loaded with circumferential forces, on each side of the ring, due to the shear stress, determined by the bi-dimensional shear flow theory from the shear force of the tank.

(3) For calculation of reaction forces at the supports, the following factors are to be taken into account:
(A) Elasticity of support material (intermediate layer of wood or similar material)
(B) Change in contact surface between tank and support, and of the relevant reactions, due to:
(a) thermal shrinkage of tank
(b) elastic deformations of tank and support material
The final distribution of the reaction forces at the supports is not to show any tensile forces.

(4) The buckling strength of the stiffening rings is to be examined.

4. Hydrostatic or hydropneumatic test for independent tank

(1) The "pressure vessels other than simple cylindrical and spherical pressure vessels" referred to in the requirements in **423. 6** (1) (A) of the Rules means those cylindrical or spherical pressure vessels with supporting structures of well proved records. In tanks of special shape having supporting structures likely to cause excessive bending stress or bicylindrical shape tanks, the stress levels are to be verified by strain measurement through prototype test.

(2) "Where necessary" referred to in the requirements in **423. 6** (4) (D) of the Rules means a case in which the shipbuilding berth or hull structure can not withstand the hydrostatic load when cargo tanks are filled with water to the tank top level and another case in which a large load exceeding the design load is imposed on the structural members of the tank or adjacent structures by conducting the hydrostatic test.

(3) For the purpose of the requirements in **423. 6** (6) of the Rules, the leakage test is to be of the airtightness test conducted at a pressure of MARVS or more of the pressure vessel.

5. Tightness test for cargo tanks

(1) Refer to the requirements in **421. 4** and **5**.

424. Membrane tanks 【See Rule】

1. Design basis

In case where the design vapour pressure is made higher than 0.025 MPa in accordance with the provision to the requirements in **424. 1** (4) of the Rules, this vapour pressure is to be taken into account when model test specified in **424. 8** (1) of the Rules is conducted. In this case, special consideration is to be given to stress concentration for the welding and construction details of the adjacent hull structure.

2. Loads and load combinations

(1) The assessments of collapse of the membrane referred to in the requirements of **424. 3** of the Rules are to be made in accordance with the following requirements (A) to (C) :
(A) For overpressure and negative pressure in the interbarrier space, collapse test is to be conducted on a prototype model of the membrane to verify its ultimate strength.
(B) For sloshing loads, impact load experiment is to be carried out on a prototype model of the membrane to verify its strength when the Society considers necessary.
(C) For vibrations, the natural frequency of the membrane is to be determined whereby it is to be verified that the membrane does not undergo resonance with the vibrations excited by propeller and main engine.

3. Structural analyses

(1) For the purpose of the requirements in **424. 4** (2) of the Rules, the hull structure adjacent to membrane tanks is to comply with the requirements of relevant rules and, in addition, the stress in the hull structure is to be restricted in consideration of the structural strength of membrane tanks, if necessary. The allowable stresses of the membrane, membrane supporting structures and insulation materials are to be determined in each case according to the mechanical properties of materials, records of construction, product specifications and levels of product quality control practice.

4. Hull structure adjacent to membrane or semi-membrane tanks (*2019*)

(1) The "hydrostatically tested" referred to in the requirements in **424. 9** of the Rules means the hydraulic test according to the requirements in **Pt 1, Annex1-16.** of the Guidance. In this case, hydraulic pressure may be applied from hull structures such as ballast tanks and cofferdams.

(2) The leakage test for the "other hold structure supporting the membrane" referred to in the requirements in **424. 9** of the Rules is to be in accordance with the requirements specified in **Pt 1, Annex1-16.** of the Guidance.

425. Integral tanks 【See Rule】

1. Design basis

In case where the design vapour pressure is made higher than 0.025 MPa in accordance with the requirements in **425. 1** of the Rules, special consideration is to be given to stress concentration for the welding and detailed construction of cargo tanks.

2. Testing

For the purpose of the requirements in **425. 5** of the Rules, the hydraulic test of integral tanks is to conform to the requirements in **Pt 1, Annex 1-16.** of the Guidance. However, for tanks whose design MARVS exceeds 0.025 MPa or specific gravity of the cargo exceeds 0.6, the test may be such as to conform to the requirements specified in **421. 5** of the Rules correspondingly.

426. Semi-membrane tanks 【See Rule】

1. Structural analysis

(1) For the purpose of the requirements in **426. 1** of the Rules, stress analysis is to be carried out on the structural members of cargo tanks in consideration of the loads specified in the requirements from **412.** to **414.** of the Rules. In this case, the requirements in **422. 3** (1) of the Rules apply correspondingly to the allowable stress.

(2) For stress analysis referred to in the preceding (1), the Society may request model test to verify the accuracy in such stress analysis or stress measurements at time of pressure test of cargo tanks when the Society deems necessary.

428. Guidance notes for Sec 4 【See Rule】

1. Internal pressure

(1) As the "Equivalent calculation procedures" referred to in the requirements in **428. 1** (1) of the Rules, the following (A) to (B) may be based upon :

(A) In the case of square tanks, the water head at arbitrary point j on the tank plate is to be obtained from the following equations :

$$h_j = h_{j \cdot st} + h_{j \cdot dyn} \quad (\mathrm{MPa})$$

$$h_{j \cdot st} = P_0 + \frac{\rho \cdot z_j}{1.02 \times 10^5} \quad (\mathrm{MPa})$$

$$h_{j \cdot dyn} = \frac{\rho\sqrt{(x_j \cdot a_x)^2 + (y_j \cdot a_y)^2 + (z_j \cdot a_z)^2}}{1.02 \times 10^5} \quad (\mathrm{MPa})$$

P_0 and ρ : as specified in **428. 1** of the Rules.

a_x, a_y and a_z : as specified in Fig **7.5.23** of the Guidance and in **428. 1** of the Rules.

x_j, y_j and z_j (m) : as specified in Fig **7.5.23** of the Guidance.

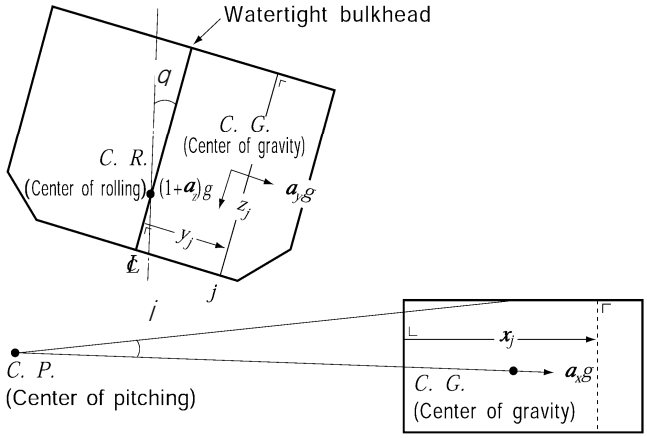

Fig 7.5.23 x_j, y_j and z_j (m) at the square tank

(B) In the case of spherical tanks, pressure $P(\phi, \theta)$, at arbitrary point on the tank plate is to be obtained from the following equations :

(a) $P(\phi,\theta) = P(\phi,\theta)_{st} + P(\phi,\theta)_{dyn}$ (MPa)

$P(\phi,\theta)_{st} = P_0 + \rho \cdot R \cdot (1-\cos\theta)/(1.02\times10^5)$ (MPa)

$P(\phi,\theta)_{dyn} = \sqrt{P_1^2+P_2^2+P_3^2}$ (MPa)

$P_1 = \rho \cdot R(\sqrt{1+a_x^2} - a_x \cdot \sin\phi \cdot \cos\theta - 1)/(1.02\times10^5)$ (MPa)

$P_2 = \rho \cdot R(\sqrt{1+a_y^2} - a_y \cdot \sin\phi \cdot \cos\theta - 1)/(1.02\times10^5)$ (MPa)

$P_3 = \rho \cdot R \cdot a_z(1-\cos\theta)/(1.02\times10^5)$ (MPa)

where ;

P_0, ρ, a_x, a_y and a_z : as specified in the preceding (A)

R : inner radius of sphere (m)

ϕ, θ : as specified in Fig **7.5.24** of the Guidance.

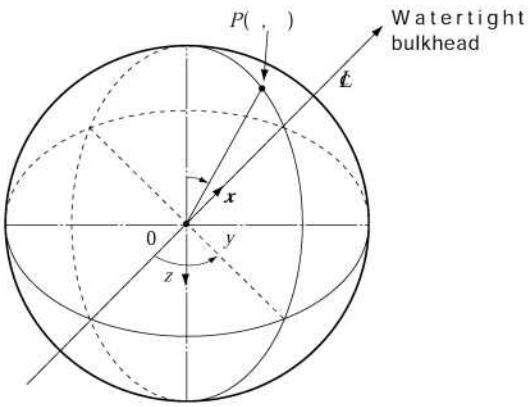

Fig 7.5.24 ϕ, θ at the spherical tank

(b) Notwithstanding the value specified in the preceding (a), the value of P is not to be less than the following value :

$$P(\phi,\theta)_{\min} = P_0 + \rho \cdot R(1+a_z) \cdot (1-\cos\phi)/(1.02\times10^5) \quad (\text{MPa})$$

where;

P_0, ρ, R and a_z : as specified in the preceding (A).

(C) In the case of cylindrical tank arranged horizontally along the longitudinal direction of the ship, pressure $P(x_j, \phi)$ at an arbitrary point on the tank plate is to be obtained from the following equation :

(a) $P(x_j,\phi) = P(x_j,\phi)_{st} + P(x_j,\phi)_{dyn}$

$$P(x_j,\phi)_{st} = P_0 + \rho R(1-\cos\phi)/(1.02\times10^5) \ (\text{MPa})$$

$$P(x_j,\phi)_{dyn} = \sqrt{P_1^2+P_2^2+P_3^2} \quad (\text{MPa})$$

$$P_1 = \rho \cdot x_j \cdot a_x/(1.02\times10^5) \quad (\text{MPa})$$

$$P_2 = \rho \cdot R(\sqrt{1+a_y^2} - a_y\sin\phi - 1)/(1.02\times10^5) \quad (\text{MPa})$$

$$P_3 = \rho \cdot R \cdot a_z(1-\cos\phi)/(1.02\times10^5) \quad (\text{MPa})$$

where;

P_0, ρ, a_x, a_y and a_z : as specified in the preceding (B)

R : inner radius of cylinder (m)

ϕ, x_j : as specified in Fig **7.5.25** of the Guidance.

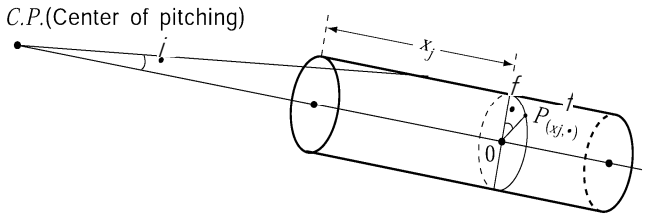

Fig 7.5.25 ϕ, x_j at the cylindrical tank

(b) Notwithstanding the value specified in the preceding (a), the value of P is not to be less than the following value :

$$P(x_j,\phi)_{\min} = P_0 + \rho \cdot R(1+a_z)(1-\cos\phi)/(1.02\times10^5) \cdots (\text{MPa})$$

Section 5 Process Pressure Vessels and Liquid, Vapour and Pressure Piping Systems

501. General 【See Rule】

1. Cargo and process piping

(1) For the purpose of the requirements in **501. 1** of the Rules, "product and process piping" means the piping used for cargo operation, cooling, heating, processing and disposing of boil-off gases having a possibility of coming to contact with the cargo. The refrigerant piping which does not directly come to contact with the cargo is not included.

(2) For product and process piping referred to in the preceding (1), in addition to the requirements in **Sec. 5** of the Rules and, the requirements **Pt 5, Ch 6** of the Rules apply where considered as necessary by the Society.

(3) For the purpose of the requirements in **Ch 5** of the Rules, approval and test requirements of cargo and process equipment are to be in accordance with **Annex 1** of **Rules for the Classification of Ships Using Low-flashpoint Fuels.** For equipment of which the requirements are specified in the Rules, relevant requirements in **Annex 1** of **Rules for the Classification of Ships Using Low-flashpoint Fuels.** are to additionally apply.

2. Process pressure vessels

(1) For the purpose of the requirements in **501. 2** of the Rules, "process pressure vessels" means the pressure vessels used for cargo operation, cooling, processing of boil-off gases and temporarily containing the cargo inside where heat exchangers are included. They, however, do not include those pressure vessels for refrigerant without containing cargo and parts of cargo pumps, compressors and valves subjected to internal pressure.

(2) Of those process pressure vessels referred to in the preceding (1), for the process pressure vessels that are not used for cargo storage, only the requirements in **403. 5, 419. 2** (1), **420. 1, 423. 2** (1) (C), (3), **3**, **6** and **7**, **604.**, **605. 6** (5) and **606. 2** (2) of the Rules apply.

502. System requirements 【See Rule】

1. Segregation of cargo piping *(2022)*

(1) "Vertical trunk-way" referred to in the requirements in **502. 2** (1) (C) of the Rules is to comply with the following requirements (A) through (G) :

(A) The access opening in the vertical trunk-way is to comply with the requirements in **305. 3** of the Rules.

(B) The bilge discharge system in the vertical trunk-way is to comply with the requirements in **307. 2, 3** and **4** of the Rules.

(C) Pressure relief system complying with the requirements in **802. 2** of the Rules is to be provided.

(D) Inerting system complying with the requirements in **902.** of the Rules is to be provided.

(E) The electrical installations within the vertical trunk-way are to comply with the requirements in **Sec. 10** of the Rules.

(F) Ventilation system complying with the requirements in **1202.** of the Rules is to be provided.

(G) Gas detecting system complying with the requirements in **1306. 2** of the Rules is to be provided.

2. The "suitable means" referred to in the requirements in **502. 2** (2) of the Rules means the residual liquid discharging piping led to cargo tank, liquid cargo line or other drain tank.

3. The "means to detect and dispose of any liquid cargo which may flow into the vent system" referred to in the requirements in **502. 2** (4) of the Rules means the fol1owing (See Fig **7.5.26** of the Guidance) :

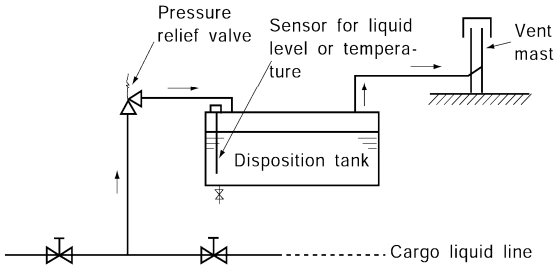

Fig 7.5.26 Example means to detect and dispose of any liquid cargo which may flow into the vent system

(1) As a means to dispose of the liquid cargo, a tank with a capacity larger than those determined in the followings are to be provided. The material of the disposition tank is to be of equivalent to the liquid cargo piping or higher grade, and in the case of pressurized cargo tanks, consideration is to be given to the temperature drop due to expansion and evaporation.
   (A) By assuming possible state of liquid full condition that may actually take place, the quantity of liquid cargo to be covered is to be determined.
   (B) Due to heat input from the fire, the quantity of expansion for the quantity of liquid indicated in (A) above to rise from the initial temperature (normally, the minimum design temperature of the pipeline) to the temperature of vapour saturation at the set pressure of the relief valve is to be obtained and on the basis of which the quantity of the liquid to the disposition tank is to be determined.
   (C) By giving consideration to the back pressure of the vent pipeline, the liquid phase quantity in the disposition tank of the inflow quantity obtained in the preceding (B) is to be computed to obtain the capacity.

(2) As a means for detecting liquid cargo, a high level alarm sensor or low temperature alarm sensor in case of low temperature cargo tanks, and a high level alarm sensor in case of pressure cargo tanks, are to be provided in the disposition tank and to issue alarm when the sensor functions.

503. Arrangements for cargo piping outside the cargo area 【See Rule】

1. Emergency cargo jettisoning

For the purpose of the requirements in **503. 1** of the Rules, the emergency cargo jettisoning piping system is to comply with the requirements in **308. 6** and **510. 1** of the Rules. The Society may give additional requirements according to details of arrangement.

504. Design pressure 【See Rule】

1. For the purpose of the requirements in **504. 2** of the Rules, where design vapour temperature higher or lower than 45°C is employed, the requirements in **401. 2** of the Rules apply.

2. The expression "duct" in **504. 4** of the Rules means to include the equipment enclosure required in **1604. 3 (1)** and **(2)** of the Rules (e.g. GVU enclosure) as well as the structural pipe duct intended to contain any release of gas from inner pipe or equipment. The term "structural pipe duct" means an outer duct forming part of a structure such as a hull structure or superstructure or deck house, where permitted, other than gas valve unit rooms. The gas valve unit rooms are to be: *(2023)*
   (1) gastight toward other enclosed spaces;
   (2) equipped with mechanical exhaust ventilation having a capacity of at least 30 air changes per hour and arranged to maintain a pressure less than the atmospheric pressure; and
   (3) able to withstand the maximum built-up pressure arising in the room in case of a gas pipe rupture, as documented by suitable calculations taking into account the ventilation arrangements.

3. For the purpose of the requirements in **504. 4** of the Rules, the expression "design pressure of the outer pipe or duct" is either of the following: *(2021)*

(1) the maximum pressure that can act on the outer pipe or equipment enclosure after the inner pipe rupture as documented by suitable calculations taking into account the venting arrangements; or

(2) for gas fuel systems with inner pipe working pressure greater than 1 MPa, the "maximum built-up pressure arising in the annular space", after the inner pipe rupture, which is to be calculated in accordance with **Ch 9, 802. of Rules for the Classification of Ships Using Low-flash-point Fuels.**

505. Cargo system valve requirements

1. Stop valves fitted to the cargo tank 【See Rule】

(1) For the purpose of the requirements in **505. 2** of the Rules, no expansion joints are to be provided between the cargo tank and stop valves fitted to the cargo tank. "To provide full closure and are to be capable of local manual operation" referred to in the requirements means that the stop valve is fitted with manual operated closing means.

(2) For the purpose of the requirements in **505. 2** (2) of the Rules, the duplicated provisions of manual stop valve and emergency shutdown valve may be made in such a way as shown in Fig **7.5.27** of the Guidance.

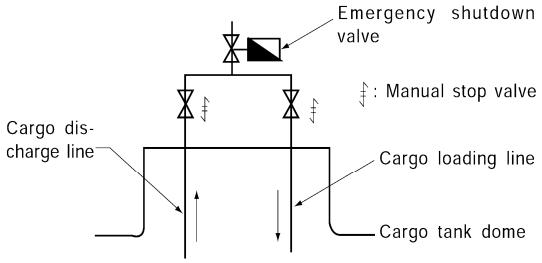

Fig 7.5.27 Duplicate provisions of stop valve and emergency shutdown valve

2. Cargo hose connection 【See Rule】

(1) The "Transfer connections not in use" referred to in the requirements in **505. 3** of the Rules means those not used for cargo operation, for example, hose connection used for gas free operation. In this case, stop valve and blind flange are to be provided at the connection.

(2) For the purpose of the requirements in **505. 3** of the Rules, the connection between the cargo hose connection and shore line is to be electrically bonded.

3. "All pipelines or components which may be isolated in a liquid full condition" referred to in the requirements in **505. 6** of the Rules means, for example, those pipelines given in the following: **【See Rule】**

(1) Pipeline between two adjacent stop valves.

(2) Pipeline between stop valve and compressor or pump likely to be liquid full. However, where the relief valve mounted on the compressor or pump is in effective condition, this requirement may be dispensed with.

(3) For the pipeline indicated in the preceding **3**, a relief valve is to be provided irrespective of its design pressure. However for the pipelines or components which may be isolated with a liquid volume of less than 0.05 m^3 entrapped, where installation of a relief valve is impractical due to small space between stop valves or stop valve are normal open with caution plate, a relief valve may not be provided. *(2022)*

506. Cargo transfer arrangements 【See Rule】

1. The cargo pumps specified in the requirements in **506. 1** of the Rules are to be approved in accordance with the requirements of the Guidance.

2. For the purpose of the requirements in **506. 1** of the Rules, when the cargo transfer methods are of the submerged pumps or by deep well pumps, standby cargo pump or the cargo transfer installations according to the requirements in **506. 2** of the Rules are to be provided.

3. The standby cargo pump referred to in the preceding **2** may be such as to conform to the following requirements :

(1) Where two sets or more cargo pumps are provided in one cargo tank, the provision of standby cargo pump may be omitted even when both of them are normally subjected to simultaneous operation. Where cargo tank of such a construction that it is separated by a bulkhead and connecting holes or bulkhead valve with remote control are not provided, each such tank separated by the bulkhead is to be regarded as one cargo tank.

(2) The stripping pump may be regarded as a standby cargo pump.

(3) The eductor may be regarded as a standby cargo pump. In this case, however, care is to be taken so that even when cargoes of different kinds are carried simultaneously, the driving fluid is available at all times.

4. The "gas pressurization" referred to in the requirements in **506. 2** of the Rules means, for example, to pressurize the cargo tank with cargo vapour pressurized by cargo compressor or cargo heater.

5. **506. 5** of the Rules is only applicable if such a sampling system is fitted on board. Connections used for control of atmosphere in cargo tanks during inerting or gassing up are not considered as cargo sampling connections. *(2021)*

6. For the purpose of the requirements in **506. 6** of the Rules, means to indicate that filters are becoming blocked and filter maintenance is required is to be provided for fixed in-line filter arrangement and portable filter installations where dedicated filter housing piping is provided.

Where portable filters for fitting to manifold presentation flanges are used without dedicated filter housing, and these can be visually inspected after each loading and discharging operation, no additional arrangements for indicating blockage or facilitating drainage are required. *(2021)*

507. Installation requirements 【See Rule】

1. For the purpose of the requirements in **507. 2** of the Rules, for piping with design temperature lower than − 5°C, the following requirements (1) to (3) are to be complied with to protect the hull structure.

(1) The branches of the piping are to be insulated for thermally separating them from the hull structure. However, in case where the materials of hull structures comply with the requirements given in **Table 7.5.8** of the Rules against the temperature obtained by heat transmission calculation in consideration of the design temperature of the piping, these requirements may be dispensed with.

(2) As a means of protection for hull structures against cargo leakage from the piping, drain pans or equivalent manufactured from the materials specified in **Table 7.5.5, Table 7.5.6** and **Table 7.5.7** of the Guidance having sufficient capacity are to be arranged according to the design temperature of the piping at all locations where liquid leakage is likely.

2. The materials of drain pans referred to in the preceding **1** (2) and (3) may be made such that they comply with the requirements of Korean Industrial Standards or recognized standards and are suitable for the design temperature of the piping system.

3. For the purpose of the requirements in **507. 4** of the Rules, the electrical bonding is to conform to the requirements of **Pt 6, Ch 1, 201. 3** of the Rules. In case where the gasketed flange joint are used, the flange bolts only are not considered as an earthing, and the connections and earthing are to be provided with earthing conductors. Also, in case where electrical bondings are necessary for cargo tanks and secondary barriers, such bondings are to be provided at readily accessible places. 【See Rule】

508. Piping fabrication and joining details

1. Application

According to the requirements in **508. 1** of the Rules, the requirements specified in **508. 2** to 5 and 509. of the Rules may be modified in accordance with the following (1) and (3) :【See Rule】

(1) For pipes provided inside the cargo tanks with open end excluding pump discharging pipings, the following requirements (A) to (C) apply :

(A) Butt welded joints with backing strips, sleeve joints and screw joints may be used in all cases.

(B) Slip-on and socket welded joints may be used in all cases.
(C) Non-destructive testing for butt welded joints may be omitted.

(2) For pipes with open ends provided outside the cargo tanks are to conform to the requirements specified in the preceding (1) (A) and (B), and in addition, the non-destructive testing for butt welded joints may be reduced to 10% sampling.

2. Connection of pipes without flanges

The "screwed couplings" referred to in the requirements in **508. 2** (3) of the Rules are to conform to the requirements of KS B 0222 or equivalent. **【See Rule】**

3. Flange connection

For the purpose of the requirements in **508. 3** (2) of the Rules, type and size of flange connections are to comply with the **Pt 5, Ch 6, Fig 5.6.1** of the Rules for the welded neck, slip-on and socket welded type as following requirements (1) to (3) : **【See Rule】**

The others except welding connection are to comply with the requirements of recognized standards for their type and size.

(1) Welded neck type : Type A in **Pt 5, Ch 6, Fig 5.6.1** of the Rules
(2) Slip-on welded type : Type B1 in **Pt 5, Ch 6, Fig 5.6.1** of the Rules
(3) Socket welded type : Type B2, B3 in **Pt 5, Ch 6, Fig 5.6.1** of the Rules

4. In application to **508. 5** of the Rules, the term “the Society may consider alternative arrangementse" means the acceptance in accordance with **Pt 1, Ch 1, 105.** of the Rules. **【See Rule】**

509. Welding, post-weld heat treatment and non-destructive testing

1. For the purpose of the requirements in **509. 2** of the Rules, the post-weld heat treatment of pipes with thickness less than 10 mm may be omitted except for those required in the requirements in **Pt 5, Ch 6, 105. 5** of the Rules. **【See Rule】**

2. For the purpose of the requirements in **509. 3** of the Rules, the radiographic inspection method and the judgement for acceptance are to conform to the requirements in **Pt 5, Ch 6, 1404.** of the Rules. **【See Rule】**

3. The "other non-destructive inspection" referred to in **509. 3** (3) of the Rules means the ultrasonic inspection, and depending on use of pipes, magnetic particle inspection or liquid penetrant inspection, and the inspection procedures are to conform to the requirements in KS D 0250, KS D 0213, KS B 0816. **【See Rule】**

511. Piping system component requirements

1. Scantlings based on internal pressure

For the purpose of the requirements in **511. 2** of the Rules, the following requirements are to be complied with :

(1) The joint efficiency of electric-resistance welded pipes where non-destructive testing for full length of weld lines is not conducted is to be 0.85.
(2) For methane, propane, butane, butadiene and propylene cargoes, the corrosion allowance is to be 0.3 mm for carbon-manganese steel and 0 mm for stainless steel and aluminium alloys. Where effective corrosion control are taken for the interior of carbon-manganese steel pipes, the corrosion allowance may be 0.15 mm.
(3) In addition to the preceding (2), for carbon-manganese steel pipes arranged on open deck without any effective external corrosion control means, 1.2 mm is to be added to the required corrosion allowance.
(4) The negative manufacturing dimensional deviation in pipe thickness is, except for expressly provided otherwise, to be in accordance with the requirements in **Pt 2, Ch 1, 401. 7, 402. 7** and **404. 7** of the Rules.

2. The "minimum wall thickness is to be in accordance with recognized standards" referred to in the requirements in **511. 2** (2) of the Rules means the value corresponding to Schedule 40 of KS SPPS for carbon-manganese steel, and the value corresponding to Schedule 10 S for stainless steel. However, for steel pipes provided with effective corrosion control or those not arranged under cor-

rosive environment, the value may be reduced to the extent acceptable to the Society with a limitation of 1 mm. Further, the value for pipes in cargo tanks and pipes having open ends may also be reduced to the extent acceptable to the Society.

3. The cases where increase in pipe size is required according to the requirements in **511. 2** (3) of the Rules are the cases in which such becomes necessary on the basis of the results of stress analysis specified in the requirements in **511. 5** of the Rules, and in which suitable supports and means to absorb structural expansion and contraction can not be arranged due to convenience of on-deck piping, etc. 【See Rule】

4. As a presumption for the condition indicated in the preceding 3, the supports for piping are to be so arranged as to prevent exertion of the own weight of the pipe on valves or other fittings and to prevent generation of excessive vibration.

5. Stress analysis

(1) For the purpose of the requirements in **511. 5** of the Rules, the calculation conditions and allowable stress in the stress analysis are to be in accordance with the following requirements (A) through (E) as standard :

(A) As temperature condition, a state uniformly cooled down to the design temperature is to be considered. As the reference temperature (thermal stress = 0), 15°C is to be regarded as standard.

(B) Loading conditions are to be in accordance with the following requirements (a) through (d):

(a) As internal pressure, the design pressure specified in the requirements in **504. 2** of the Rules is to be considered.

(b) The own weight of pipelines, when can not be neglected, is to be considered including its acceleration.

(c) As forced displacement, the forced strains corresponding to allowable sagging moment and hogging moment for the hull are to be considered.

(d) As thermal load, one which can be determined according to the condition indicated in the preceding (A) is to be considered.

(C) Support conditions are to be as deemed appropriate by the Society depending on the construction, arrangement and materials of the pipe supports.

(D) Allowable stresses are to be as deemed appropriate by the Society depending on the calculation method and materials of pipelines.

(E) Insulation materials are to be considered to give no contribution at all to the strength of the pipeline.

(2) According to the requirements in **511. 5** of the Rules, stress analysis may be required for pipings with the design temperature higher than −110°C where the following (A) to (C) are relevant :

(A) Where suitable supports or means to absorb structural expansion and contraction can not be arranged due to convenience of on-deck piping arrangement.

(B) Where new supporting method or new means to absorb expansion and contraction are used.

(C) Other cases where the Society deems necessary.

6. For the purpose of the requirements in **511. 6** (1) of the Rules, fittings are to comply with the following requirements: 【See Rule】

(1) Valves, flanges and other fittings are to comply with the requirements of recognized standards for their type and size, and the requirements in **Pt 5, Ch 6, 104.** of the Rules for flanges.

(2) The design pressure of bellows type expansion joints to be used in vapour piping may be taken 0.2 MPa for those provided on pipelines with open ends, and 0.5 MPa for those provided on other pipelines.

7. In application to **511. 6** (2) of the Rules, the term "the satisfaction of the Society" means the case where the temperature, the pressure and the size of the flange have values above certain limits and the complete calculation of bolts and flanges is to be carried out.

512. Materials 【See Rule】

1. For the purpose of the requirements in **512. 1** of the Rules, the materials of pipings, valves and fittings are to comply with the relevant requirements in **Sec 6** of the Rules, and at the same time, to conform to the relevant requirements in **Pt 2, Ch 1** of the Rules. However, for materials used in pipings as specified in the following (1) through (2), those conforming to **Pt 5, Ch 6, Sec 1** of the

Rules may be used. *(2019)*

(1) Pipes, valves and pipe fittings used for cargo piping and process piping with the design temperature of 0°C or more.

(2) Pipes, valves and pipe fittings used for accessory piping or instrumentation piping with diameter not exceeding 25 mm with the design temperature below 0°C. The materials are to comply with the relevant requirements in **Sec 6** of the Rules,

2. Notwithstanding the requirements in the preceding 1, piping with the design temperature of -55 °C or more may comply with the followings.

(1) The piping having open ends not coming to contact with the liquid cargo led from the pressure relieving valves of cargo tanks and cargo piping or process piping with the design temperature of -55°C or higher may not be made of the steel for low temperature services specified in **Table 7.5.7** of the Rules. Further, its material may be such as to comply with recognized standards as deemed appropriate by the Society.

(2) Work's certificate with manufacturing process approved by the Society may be accepted for material of valve and fittings. Where, however, it is deemed to be necessary by the Society, the attendance of the Surveyor is required for material tests.

3. For the purpose of the requirements in **512. 2** of the Rules, the insulation applied on the short pipes with a melting point lower than 925°C fitted to the cargo tank, except for the minimum range of area necessary for inspection and maintenance of pipe flanges, is to be protected according to the requirements specified in **419. 5** (2) of the Guidance. Further, the insulation materials for cargo piping and other piping are to conform to the requirements in **419. 6** (4) (B) of the Guidance.

4. With reference to **3.** (1) of the Rules, the expression 'a thermal insulation system as required to minimize heat leak into the cargo during transfer operations' means that properties of the piping insulation are to be taken into consideration when calculating the heat balance of the containment system and capacity of the pressure/temperature control system.

The expression 'cargo piping systems are to be provided with a thermal insulation system as required ... to protect personnel from direct contact with cold surfaces' means that surfaces of cargo piping systems with which personnel is likely to contact under normal conditions are to be protected by a thermal insulation, with the exception of the following examples; *(2020)*

(1) surfaces of cargo piping systems which are protected by physical screening measures to prevent such direct contact;

(2) surfaces of manual valves, having extended spindles that protect the operator from the cargo temperature; and

(3) surfaces of cargo piping systems whose design temperature (to be determined from inner fluid temperature) is above minus 10 °C.

513. Testing requirements *(2025)*

1. Requirements of type tests 【See Rule】

(1) In application to **513. 1** (1) (B) of the Rules, for valves used for isolation of instrumentation in piping not greater than 25 mm, unit production testing need not be witnessed by the surveyor. Records of testing are to be submitted for review.

(2) For the purpose of the requirements in **513. 1** (2) of the Rules, all bellows type expansion joints provided on all cargo piping including the cargo liquid/vapour piping provided both inside and outside the tanks, and vent piping with open ends are to be of the approved ones in accordance with open ends are to be type approved.

(3) The "procedure as deemed appropriate by the Society" referred to in **513. 1** (1), (2) and (3) of the Rules means the procedure required in **Ch 3, Sec 15** of "Guidance for approval of Manufacturing Process and Type approval, Etc.". In application to this requirement, prototype test in accordance with Ch 3, Sec 15 of the "Guidance for Approval of Manufacturing Process and Type Approval, Etc." may be accepted instead of type approval. *(2022)*

(4) For the purpose of the requirements in **513. 1** of the Rules, relevant requirements in **Annex 1** of **Rules for the Classification of Ships Using Low-flashpoint Fuels.** are to additionally apply.

(5) For the purpose of the requirements in 513. 1 (3) (A) and 513. 1 (4) (A) of the Rules, the following requirements are to be considered.

(A) Compressors and pumps are to be suitable for their intended purpose. All equipment and machinery are to be adequately designed to ensure suitability within a marine environment

with due consideration to **Ch 3, Sec 23** of the "**Guidance for Approval of Manufacturing Process and Type Approval, Etc.**" and **Pt 5, Ch 1, 103. of the Rules**. Such items to be considered would include, but not be limited to:

(a) environmental;
(b) shipboard vibrations and accelerations;
(c) effects of pitch, heave and roll motions, etc.; and
(d) physical and chemical properties of product

The manufacturer is to submit documentation indicating the equipment has been designed to comply with the above criteria.

(B) For the design assessment of the pumps, ISO 13709:2009 and ISO 24490:2016, as applicable, can be used. For the design assessment of the gas compressors, API standards. 617:2014 (w. Errata 1:2016), 618:2016 or 619:2010, as applicable, can be used. Other applicable recognized standards acceptable to the Society may be considered

(C) Material tests for pump and compressor materials of the boundary components, which are in direct contact with the medium, and those with a design temperature below -55°C are to be witnessed by the Surveyor. In addition, the scope of the main structural components to which these material tests apply and the corresponding requirements are to be in accordance with the applicable requirements in **Annex 1** of **Rules for the Classification of Ships Using Low-flashpoint Fuels**.

(D) When the manufacturer requests the Society to waive the production test, the relevant material testing requirements in required in above (C) are to be applied in addition to the requirements in **513. 1** (3) (C) and **513. 1** (4) (C).

2. Application 【See Rule】

For the purpose of the requirements in **513. 2** (1) of the Rules, for pipes within the cargo tank and pipes with open ends, the hydraulic test and leak test specified in the requirements in **513. 2** (2) and (3) of the Rules may be omitted. However, the hydraulic test specified in the requirements in **513. 2** (2) of the Rules is to be conducted for pipes without open ends and discharging pipes provided inside the cargo tanks.

3. Pressure test

For the purpose of the requirements in **513. 2** (4) of the Rules, the expression "maximum pressure at gas pipe rupture" is the maximum pressure to which the outer pipe or duct is subjected after the inner pipe rupture and for testing purposes it is the same as the design pressure used in **504. 4** of the Rules. The expression "duct" in **513. 2 (4)** of the Rules means to comply **504. 2.** *(2023)*

4. Test under operating condition

For the purpose of the requirements in **513. 2** (5) of the Rules, the test is to be conducted according to the requirements in **420. 4** of the Guidance.

5. Leak test For the purpose of the requirements in **513. 2** (3) of the Rules, the leak test after installing the complete compressor assembly connected to the vessel systems is to be performed in a same manner in the presence of the Surveyor and considered satisfactory when no joint leaks are observed.

Section 6 Materials of Construction and Quality Control

603. General test requirements and specifications 【See Rule】

1. Mechanical properties

For the purpose of the requirements in **603. 1** of the Rules, the required values of tensile strength, yield stress and elongation of a material are to be in accordance with the requirements in **Pt 2, Ch 1** of the Rules applicable to the material.

2. Alternative materials

The design temperature of a material may falls under the higher temperature range than the specified one for the material from **Table 7.5.4** to **Table 7.5.7** of the Rules. In this case, the impact test temperature correspondingly to the design temperature may be used instead of the impact test temperature depending on the material. For example, in the case of 2.25 % nickel steel pipes used at the design temperature of -45°C, the impact test temperature may be -50°C, while in the case of 3.5 % nickel steel plates used at the design temperature of -61°C, the impact test temperature may be -70°C. The impact test of austenitic stainless steel may be omitted, subject to agreement with the Society.

3. Properties after post-weld heat treatment

When post-weld heat treatment is carried out, the properties of the base material are to be in accordance with the requirements given in **Table 7.5.4** to **Table 7.5.7** of the Rules in the heat treated condition or equivalent condition whether such post-weld heat treatment is regarded in **606.** or **504. 6** (2) of the Rules or not. The welds properties at welding procedure qualification tests and production weld tests specified in the requirements in **605.** of the Rules are to satisfy the requirements in **605. 3** and **5** of the Rules in the heat treated condition.

4. Toughness test

(1) For the purpose of the requirements in **603. 2** (2) of the Rules, in the case where the material thickness is 40mm or below, the Charpy V-notch impact test specimens are to be cut with their edge within 2 mm from the "as rolled" surface with their longitudinal axes either parallel or transverse to the final direction of rolling of the material.

(2) In application to **603. 2** (4) of the Rules, the re-testing of Charpy V-notch impact test specimens is to be in accordance with **Pt 2, Ch 1, 109.** of the Rules.

604. Requirements for metallic materials

1. For the purpose of the requirements in **Table 7.5.4** of the Rules, the following requirements are to be complied with : **【See Rule】**

(1) The use of the longitudinally or spirally welded pipes given in the Note (1) of the Table is to be in accordance with the relevant requirements in **Pt 2, Ch 1, Sec 4** of the Rules.

(2) Fittings of type C independent tanks and process pressure vessels with the design pressure not exceeding 3.0MPa and design temperature of 0°C or more and nominal diameter less than 100A given in Note (1) may comply with the requirements of KS or other standards as deemed appropriate by the Society.

(3) The controlled rolling as a substitution for normalizing given in Note (4) may be of the temperature controlled rolling or Thermo-Mechanical Controlled Processing (TMCP). Also, the controlled rolling as a substitution for tempering and quenching may be of TMCP.

2. The controlled rolling as a substitution for normalizing or tempering and quenching given in Note (4) of **Table 7.5.5** of the Rules may be of TMCP. **【See Rule】**

3. For the purpose of the requirements in **Table 7.5.6** of the Rules, the following requirements are to be complied with : **【See Rule】**

(1) For the purpose of the requirements in Note (2) of the Table, aluminium alloy of 5083, austenitic stainless steel, 36 % nickel steel and 9 % nickel steel may be used at the design temperature up to 196°C.

(2) For the purpose of the requirements in Note (4) of the Table, 9 % nickel steel greater than 25 mm and up to 40mm in thickness is to be in accordance with the requirements for 9 % nickel

steel not greater than 25mm. *(2018)*

(3) For the purpose of the requirements in Note (5) of the Table, the chemical composition limit of a material, if the material specified in **Pt 2** of the Rules, is to be in accordance with the relevant requirements in **Pt 2, Ch 1** of the Rules.

(4) For the purpose of the requirements in Note (9) of the Table, the omission of the impact test given in Note (9) of the Table may generally be accepted for the austenitic steel of the type referred to in the Table.

4. For the purpose of the requirements in **Table 7.5.7** of the Rules, the following requirements are to be complied with : **【See Rule】**

(1) The use of longitudinally or spirally welded pipes given in Note (1) of the Table is to be in accordance with the requirements in the preceding (1) (A).

(2) The requirements for forgings and castings given in Note (2) of the Table are to be in accordance with the relevant requirements in **Pt 2, Ch 1** of the Rules if specified.

(3) For the design temperature given in Note (3) of the Table lower than −165°C, the provision in the preceding **3.** (1) are to apply.

(4) The chemical composition limit given in Note (5) of the Table is to be in accordance with the requirements in the preceding **3.** (3)

(5) The omission of the impact test given in Note (8) of this Table are to be in accordance with the requirements in the preceding **3.** (4)

5. For the purpose of the requirements in **604. 1** of the Rules. *(2017)*

(1) The requirements for castings and forgings intended for cargo and process piping for design temperature above 0°C are to be accordance with **Pt 2, Ch 1** of the Rules.

(2) Materials with alternative chemical composition or mechanical properties may be accepted by special agreement with the Society.

(3) Where post-weld heat treatment is specified or required, the properties of the base materials are to be determined in the heat treated condition in accordance with the applicable table and the weld properties are to be determined in the heat treated condition in accordance with **605.**. In cases where a post-weld heat treatment is applied, the test requirements may be modified at the discretion of the Society.

(4) Where reference is made to hull structural steels, the requirements of **Pt 2, Ch 1, 301.** of the Rules for appropriate grades apply.

605. Welding of metallic materials and non-destructive testing 【See Rule】

1. General

(1) The requirements in **605.** of the Rules apply to independent tanks, semi-membrane tanks, process pressure vessels, integral tanks and piping. The requirements on membrane tanks, are to the satisfaction of the Society depending on the structural type of the tank.

(2) For the purpose of the requirements in **605. 5** of the Rules, the following requirements (A) and (B) are to be complied with.

(A) The impact test may generally be omitted for austenitic stainless steels of types given in **Table 7.5.6** and **Table 7.5.7** of the Rules.

(B) The impact test may generally be omitted for aluminum alloys of 5083 and welding material of 5183.

(3) Welding procedure tests for secondary barriers are to be in accordance with **Pt 2, Ch 2, Sec 4** of the Rules. *(2017)*

2. Welding procedure qualification tests of cargo tanks and process pressure vessels

(1) Longitudinal bend tests which are required in lieu of transverse bend tests in the case where the base material and weld metal have different strength level specified in **605. 3** (4) (C) of the Rules, such as 9 % nickel steel, are to be in accordance with the requirements in **Pt 2, Ch 2, 402.** of the Rules.

(2) For the purpose of the requirements in **605. 3** (4) (E) of the Rules, for type C independent tanks and process pressure vessels, macroscopic and microscopic examinations and hardness tests are to be carried out according to the requirements of the Rules. For other independent tanks, integral tank and semi-membrane tanks, macroscopic examinations are to be carried out according to the requirements in **Pt 2, Ch 2, Sec 4** of the Rules.

(3) For the purpose of the requirements in **605. 3** (5) of the Rules, the welding procedure qualification test are also to comply with the relevant requirements in **Pt 2, Ch 2, Sec 4.** and **Pt 5,**

Ch 5, Sec 4 of the Rules.

(4) For the purpose of the requirements in **605. 3** (5) (B) of the Rules, bend tests are also to comply with the requirements in **Pt 2, Ch 2, 404. 5** of the Rules. In case where the base metal is of RLP9 specified in **Pt 2, Ch 1** of the Rules, bend tests may be omitted.

(5) For the purpose of the requirements in **605. 3** (5) of the Rules, the test temperature of impact tests may be determined in accordance with the requirements in **603. 2** of the Guidance.

(6) In application to **605. 3** (3) of the Rules, radiographic or ultrasonic testing may be performed at the option of the Society. *(2017)*

(7) In application to **605. 3** (5) of the Rules, besides aluminium alloys, it may also be accepted subject to agreement with the Society that the transverse weld tensile strength is not to be less than the specified minimum tensile strength for the deposited metal, where the weld metal has lower tensile strength than that of the parent metal. *(2017)*

3. Welding procedure qualification tests for piping

For the purpose of the requirements in **605. 4** of the Rules, welding procedure qualification tests for pipes are also to be in accordance with the relevant requirements in **Pt 2, Ch 1** and **Pt 2, Ch 2, Sec 4** of the Rules.

4. Production weld tests

(1) For the purpose of the requirements in **605. 5** of the Rules, production weld tests are also to be in accordance with the relevant requirements in **Pt 2, Ch 2, Sec 3** of the Rules and **Pt 5, Ch 5, 405.** of the Rules.

(2) For the purpose of the requirements in **605. 5** (1) of the Rules, the number of test specimens for production weld tests of secondary barriers may be reduced to the extent as deemed appropriate by the Society considering the experience of same welding procedures in past, workmanship and quality control. In general, intervals of production weld tests for secondary barriers may be approximately 200 m of butt weld joints and the tests are to be representative of each welding position. Test requirements are to be in accordance with **605. 3** (5). of Rules. *(2017)*

(3) For the purpose of the requirements in **605. 5** (5) of the Rules, number of test specimens for the production weld tests for integral tanks may be reduced to the same level as in the case of secondary barrier given in the preceding (2). Production weld tests for membrane tanks are left to the discretion of the Society depending on the construction system of the tank.

5. Non-destructive testing

(1) For the purpose of the requirements in **605. 6** (2) of the Rules, the following requirements are to be complied with.

(A) For the non-destructive tests specified in the requirements in **605. 6** (4) of the Rules for the remaining welds of tank plates of type A and B independent tanks and semi-membrane tanks other than butt welds, fillet welds of highly stressed parts of main structural members of cargo tanks are to be examined magnetic particle or dye penetrant tests given in the following (B). Butt welds of highly stressed parts of main structural members such as face plates of girders are to be subjected to radiographic test given in the following (B).

(B) Non-destructive tests refered to in the requirements in **605. 6** (5) of the Rules are to be in accordance with **Pt 2. Annex 2-7** of the Rules. *(2024)*

(a) For radiographic tests, the quality level and acceptance levels are provided in **table 7.5.7-1** below. When If the requirements in table 7.5.7-1 are not met, the acceptance is left to the discretion of the Society in consideration of the importancy of the structural members and nature of defects, etc.

Table 7.5.7-1 The acceptance levels and required quality levels for Radiographic Testing

Quality Levels (ISO 5817:2014 applies)(1)	Testing Techniques/ levels (ISO 17636-1:2022 applies)(1)	Acceptance levels (ISO 10675-1:2021 applies)(1)
B	B(class)	1

Note:
(1) Or any recognized standard agreed with the Society and demonstrated to be acceptable

(b) For ultrasonic tests, the quality level and acceptance levels are provided in **table 7.5.7-2** below.

Table 7.5.7-2 The acceptance levels and required quality levels for Ultrasonic Testing

Quality Levels (ISO 5817:2014 applies)(1)	Testing Techniques/Levels (ISO 17640:2018 applies)(1)	Acceptance Levels (ISO 11666:2018 applies)(1)
B	at least B	2
Note: (1) Or any recognized standard agreed with the Society and demonstrated to be acceptable		

(c) For magnetic particle tests, the quality level and acceptance levels are provided in **table 7.5.7-3** below.

Table 7.5.7-3 The acceptance levels and required quality levels for Magnetic Partcile Testing

Quality Levels (ISO 5817:2014 applies)(1)	Acceptance Levels (ISO 11666:2018 applies)(1)
B	2X
Note: (1) Or any recognized standard agreed with the Society and demonstrated to be acceptable	

(d) For dye penetrant tests, the quality level and acceptance levels are provided in **table 7.5.7-4** below.

Table 7.5.7-4 The acceptance levels and required quality levels for Dye Panetrant Testing

Quality Levels (ISO 5817:2014 applies)(1)	Acceptance Levels (ISO 11666:2018 applies)(1)
B	2X
Note: (1) Or any recognized standard agreed with the Society and demonstrated to be acceptable	

(C) Where ultrasonic tests are performed as a substitution for radio-graphic tests according to the requirements in **605. 6** (5) of the Rules, at least 10 % of the whole testing objects are to be subjected to radiographic tests.

(2) The welding inspection procedures and acceptance criteria for integral tanks are to comply with the requirements in **605. 6** (3) of the Rules correspondingly. The procedures and criteria for membrane tanks are to be to the satisfaction of the Society, depending on the structural type of the tanks.

(3) For the purpose of the requirements in **605. 6** (8) of the Rules, the radio-graphic tests of secondary barriers where the hull structure acts as the secondary barrier are to be performed for the double bottom tank top platings and bulkhead platings in accordance with the requirements for shell platings of ordinary ships specified in **Pt 2, Ch 2, 309.** of the Rules.

606. Other requirements for construction in metallic materials 【See Rule】

1. Stress relieving by post-weld heat treatment

For the purpose of the requirements in **606. 2** (2) of the Rules, the stress relieving is to be in accordance with the following requirements (1) to (3) :

(1) The post-weld heat treatment is to comply with the requirements in **Pt 5, Ch 5, 403.** of the Rules.

(2) For 9 % nickel steel, 5 % nickel steel and aluminium alloy 5083-O, post-weld heat treatment may, in general, be omitted.

(3) For cargo tanks made of carbon steel and carbon manganese steel with the design temperature of −10°C or more, the requirements in **Pt 5, Ch 5, 403.** of the Rules may be based upon except for cargo tanks anticipated to carry chlorine, ammonia and toxic cargoes.

Section 7 Cargo Pressure/Temperature Control

701. Methods of control 【See Rule】

1. Gas Combustion Units(GCU)

For the purpose of the requirements in **701. 1** of the Rules, a gas combustion unit for disposal of cargo vapour is to be comply with the followings. *(2022)*

(1) For ships carrying liquified gas in bulk fitted with a gas combustion unit, the an additional installation notation of GCU may be assigned. *(2022)*

(2) A gas combustion unit is consist of the following systems.
  (A) Gas supply system
    (a) Compressor
    (b) Heat exchanger
    (c) Automatic gas shut-off valves
    (d) Piping
    (e) Gas valve unit and venting system
  (B) Gas burner system
    (a) Gas burner unit
    (b) Combustion chamber
    (c) Forced draft fans
    (d) Exhaust gas duct

(3) The compressors are to be designed in accordance with **506. 5** of the Guidance, except that the compressors are to be capable of being stopped locally and remotely from the cargo control room and from the bridge.

(4) The heat exchangers are to be in accordance with **Pt 5, Ch 5, Sec 3** of the Rules.

(5) Gas fuel supply piping is to be in accordance with **1604.** of the Rules. However, where the fuel gas supply piping system is a single wall design and the associated valves including the burner gas fuel connection at the gas combustion unit are located inside a gas tight compartment inside an engine room or other gas safe spaces, the arrangements are to be as follows:
  (A) The pressure in the fuel gas supply line is not to exceed 1.0 MPa.
  (B) The pipes are to be of all-welded construction with flange connections only at connections to equipment.
  (C) This compartment is to have access to the open deck. Where this is not possible, entrance and exits to this compartment from a gas safe space are to be through a self-closing gas-tight door.
  (D) The compartment is to be fitted with a mechanical exhaust ventilation system complying with (11).
  (E) The compartment is to be fitted with a gas detection system complying with (12).

(6) The gas burner unit is to be as follows:
  (A) Gas nozzles are to be fitted in such a way that gas fuel is ignited by the flame of the oil pilot burner or by an electrical ignition system.
  (B) The gas burner is to be fitted with a flame scanner. The flame scanner is to be dual scanners or a scanner of the self-checking type. The flame is to be surely established in within period of not more than 10 seconds. If the flame is not established within 10 seconds, the gas fuel supply to the burner is to be immediately shut off automatically. In the case of flame failure, shut-off is to be achieved within four 4 seconds following flame extinguishment. In the case of failure of the flame scanner, the gas fuel is to be shut off automatically.
  (C) An installation is to be provided for purging the gas supply piping and combustion chamber in accordnace with 1606. 2 and 3 of the Rules after the extinguishing of the gas burner.
  (D) The burner management system is to be arranged such that the gas burner cannot be ignited until forced draft and dilution air fan flow is established.
  (E) The gas burner unit is to have the capability of automatic operation with manual local controls.
  (F) A manually operated shut-off valve is to be fitted on the pipe of each gas burner.

(7) Each gas fuel burner unit is to be fitted with an oil pilot burner or electrical igniter. The oil pilot burner is to be designed to automatically shut off the fuel supply to the burner within 6 seconds in the event of flame failure. In the case of failure of the flame scanner, the fuel to the oil pilot burner is to be shut off automatically.

(8) Each gas combustion unit is to be fitted with minimum of two forced draft fans and two dilution fans as follows. Forced draft fans and dilution fans can be combinedly used. *(2017)*
  (A) Each fan is to be sized such that the total capacity is not less than 100 % of the total capacity required to support the full rated capacity of the GCU with one fan kept in reserve. Forced draft fan motors are to be located in a gas-safe space. Where it is impossible to install the motors in the gas-safe space, the motors are to be of increased safety type or pressurized protected type.
  (B) Each dilution fan is to be sized such that the total capacity is not less than 100 % of the total capacity required to support the full rated capacity of the GCU with one fan kept in reserve.
  (C) Means are to be provided for measuring and monitoring of air flow in the forced draft and the dilution air flow on the discharge side.

(9) Equivalent means(e.g. direct/indirect cooling device using fresh water and sea water, etc) may be accepted in lieu of dilution fans specified in (8) where data to demonstrate their equivalence to dilution fans are submitted to the Society. *(2017)*

(10) The combustion chamber is to be as follows: *(2017)*
  (A) The combustion chamber walls are to be protected with insulated fire bricks and/or a cooling system. Hot surfaces likely to come in contact with the crew during operation are to be suitably guarded or insulated.
  (B) The combustion chamber and the insulated fire bricks are to be designed to ensure that in the event of failure of the dilution fans or the equivalent means, the temperature of the casing does not exceed 230°C.
  (C) Where the casing of the combustion chambers is required to be cooled due to temperature limitation of the material used, this may be achieved by dilution fans or equivalent means, as per (8) or (9).
  (D) The combustion chamber is to be of suitable form such as not to present pockets where gas may accumulate.

(11) Exhaust gas temperature at the discharge from the gas combustion unit is not to exceed 535°C during operation.

(12) Ventilation arrangements are to comply with of the **1604.** of the Rules, except that where the gas fuel supply pipe is a single wall design, as described in **1** (5), the ventilation of the spaces containing the gas combustion unit is to be in accordance with the followings:
  (A) The gas combustion unit compartment is to be fitted with a mechanical ventilation system having a capacity of at least 30 air changes per hour based on the gross volume of the compartment. The ventilation system is to be provided with at least two fans. The capacity of each fan is to be not less than 100% of the total capacity required.
  (B) Ventilation ducting is to be situated in the gas combustion unit compartment in such a manner as to ensure immediate evacuation of the leaked gas from the entire compartment without the possibility of pockets of gas. Either a gas dispersion analysis or a physical smoke test is to be conducted in order to prove that the inlets in the ducting are positioned for the effective removal of the leaked gas from the compartment.
  (C) The ventilation system in the gas combustion unit compartment is to be separate from those intended for other spaces. The ventilation inlet and discharge are to be respectively from and to a safe location.
  (D) The ventilation fans are to be of non-sparking construction in accordance with **Pt 8, Ch 3, 104.** of the Rules and electric motors for these fans are to be located outside of the duct.

(13) Gas detection arrangements are to comply with **1604.** of the Rules, except that where the gas fuel supply pipe is a single wall design as described in **1** (5), the gas detection arrangements are to be in accordance with the followings:
  (A) At least two independent fixed gas detection systems are to be installed in the gas combustion unit compartment for continuous monitoring of the presence of leaked gas.
  (B) Each gas detection system is to be of the self-monitoring type.
  (C) In the case that a detection system fault is detected by the self-monitoring functions, the output of the detection system is to be automatically disconnected such that the detector fault will not cause false emergency shutdown.
  (D) Each gas detection system is to be so arranged that it provides functional redundancy when either one of the systems fails.
  (F) Gas detection equipment is to be so designed that it may be readily tested.

(14) Alarm and safety systems are to be provided as given in **Table 7.5.8.**

Table 7.5.8 Alarm and Safety Systems for Gas Combustion Units

Monitored parameters [H=High L=Low HH=High High O=Abnormal status]		Alarm Activation	Automatic shutdown of GCU	Automatic shutdown of master gas valve	Other safety systems
Gas supply – pressure	L	●	●		
Gas supply – temperature	H L	●	●		
Combustion fans, dilution fans or combinedly used fans – failure	O	●			Auto start of the stand-by fan
Flame-loss	O	●	●		
Flame monitoring device – failure	O	●			
Flue gas – temperature	H HH	● ●	●		
GCU stop	O	●	●		
Control power supply – failure	O	●			
Double wall gas piping system – gas detection	30% LEL	●			
	60% LEL	●	●	●	
Double wall piping systems – loss of exhaust ventilation	O	●	●	●	
Single wall piping systems – gas detection in gas combustion unit compartment	30% LEL	●			
	60% LEL	●	●	●	disconnect of non-explosion protected electrical equipment
Single wall piping systems – gas detection in GCU compartment	O	●	●	●	

(15) Automatic shutdown systems are to comply with **1604.** of the Rules.

(16) Where gas combustion units are integrated with inert gas generator, appropriate means such as the followings are to be provided to prevent pilot fuel from being discharged overboard due to misfiring;

(A) providing a water seal in overboard discharge piping of the scrubber,

(B) using not pilot oil but spark as ignition medium, or

(C) submitting documentation demonstrate that it is not possible to discharged pilot oil overboard.

2. Means of control

The "pressure accumulation" referred to in the requirements in **701. 1** (3) of the Rules means the pressurized cargo tanks which are, in general, accepted for ships with limited area of service. The ambient design temperature and period of voyage as the design conditions of the system are to be to the satisfaction of the Society in consideration of the sea and weather conditions of the service area, and where necessary, possible extension of voyage for sheltering from heavy weather.

3. Design requirement for dangerous cargoes

The "certain highly dangerous cargoes specified in **Sec 17**" referred to in **701. 2** of the Rules means the cargoes to which **1703. 2** of the Rules applies as required in column i in Table of **Sec 19** of the Rules.

703. Reliquefaction of cargo vapours 【See Rule】

1. Design requirement of the system

(1) For the purpose of the requirements in **703.** of the Rules, the cooling system is to comply with the following requirements (A) to (C) :

(A) For the refrigerating plant, the following requirements (a) and (b) are to be complied with :

(a) In the case of indirect system, the relevant requirements in **Pt 9, Ch 1** of the Rules are to be complied with.

(b) In the case of the direct system, the following requirements (i) through (vii) are to be complied with :

(i) The construction of compressors is to be such that causes only a small amount of gas leakage and without sparks.

(ii) A relief valve or overpressure preventing device is to be provided on the discharge from the compressor. However, when overpressure is unlikely, this requirement may be dispensed with. The vent pipe of the relief valve of the compressor is to be led to the vent system specified in the requirements in **802. 10** of the Rules.

(iii) A pressure gauge is to be provided on the discharge side of the compressor.

(iv) Means to avoid the entry of cargo liquid into the compressor are to be provided.

(v) The requirements in **Pt 9, Ch 1, 401.** and **404. 1** of the Rules apply correspondingly.

(vi) The temperature of the cooling sea water used in the calculation of capacity of the refrigeration plant is to be the ambient sea water temperature specified in **702.** of the Rules.

(vii) The compressors and heat exchangers are to be approved in accordance with **Annex 1** of **Rules for the Classification of Ships Using Low-flashpoint Fuels.**

(B) For pressure vessels and pipings, the relevant requirements in **Sec 5** of the Rules are to be complied with.

(C) For pressure relief valves, level gauges and other fittings, the relevant requirements in **Sec 5**, **8** and **13** of the Rules apply correspondingly as necessary.

(2) The increments/decrements of design ambient temperature specified in the requirements in **702.** of the Rules are to be in accordance with **413. 2** (2) of the Rules.

(3) The maximum temperature of steam and heating media within the cargo area is to be adjusted to take into account the temperature class of the cargoes.

2. Reliquefaction plant of methane(LNG)

For the purpose of the requirements in **703.** of the Rules, a reliquefaction plant of methane is to be comply with the followings. But, the cargoes other than methane may comply with following requirements taking into account the character of the products :

(1) For ships carrying liquefied gases in bulk fitted with a reliquefaction plant, the an additional installation notation of Reliquefaction may be assigned.

(2) The capacity is to be as follows:

(A) Mechanical refrigeration fitted as the primary system for cargo pressure control

(a) **703.** of the Rules is based on the assumption that **701. 1** of the Rules is being compiled with by using means defined in **701. 1** (1). That is to say, a mechanical refrigeration system is fitted as the primary means of maintaining the cargo tank pressure below MARVS.

(b) **703**. of the Rules is to apply to refrigeration systems when fitted on ships carrying liquefied gases in bulk, ie standby capacity will be required as detailed in **708.** A stand-by LNG/refrigerant heat exchanger need not be provided and the fitted LNG/refrigerant heat exchanger will not be required to have 25% excess capacity over that for normal requirements. Other heat exchangers utilizing water cooling should have a stand-by or have at least 25 per cent excess capacity.

(B) Mechanical refrigeration fitted as secondary system for cargo pressure control

(a) Where a refrigeration plant is fitted as a means of disposing of excess energy, no stand-by unit will be required for the refrigeration plant.

(3) The reliquefaction system consists of the followings.

(A) Boil off gas circuit which is vapor from the cargo tanks and LNG return to the cargo tanks.

(B) Refrigeration circuit for cooling down and re-liquefying the boil off gas.

(4) The LNG returned to cargo tanks is to be distributed in such a way so as not to exceed filling limits for cargo tanks. Where it is proposed that LNG from the re-liquefaction system is re-

turned by way of a gravity return or pressure return system, pressure drop calculations for the asfitted system are to be submitted.

(5) Equipment composing boil off gas circuit is to be comply with the followings.

(A) Gas compressors is to be comply with the followings.

(a) Compressors for pressurizing the boil-off gas in are to be independent of all other gas duties associated with the cargo system.

(b) The compressors are to be designed in accordance with **506. 5** of the Guidance, except that the compressors are to be capable of being stopped locally and remotely from the cargo control room and from the bridge.

(B) Pumps for reliquefaction systems are to be entirely independent of all other cargo pumps and Material used in the pumps for reliquefaction systems are to be in accordance with **Sec 6** of the Rules.

(C) If necessary the separation system, the separation system is to be provided to remove impurities in the boil-off gas, as well as nitrogen, and details of the separation system are to be submitted.

(6) Equipment composing refrigeration circuit is to be comply with the followings.

(A) The use of ozone depleting refrigerants and those refrigerants contributing to the global warming potential is not acceptable.

(B) Where nitrogen is used as the refrigerant supplied by the vessel's nitrogen generation system, there is to be a minimum of two independent units fitted, so that with any one unit inoperative, 100% of the required capacity will be available.

(C) Refrigerant compressors are to be in accordance with **Pt 9, Ch 1, Sec 3** of the Rules.

(D) Heat Exchangers are to be comply with the followings.

(a) The heat exchangers are to be in accordance with **Ch 5, Sec 5** of the Rules. If nitrogen refrigerant compressors are to be located in gas-safe spaces, the pressure in the refrigerant circuit is to be maintained greater than the pressure in the boil-off gas circuit at all times to mitigate the risks of boil-off gas returning to the refrigeration compressors through the refrigerant system.

(b) Where the cold box is provided, following requirements are to comply with.

(i) Piping inside the cold box is to be of all-welded construction. Where flanged connections are essential, details indicating the necessity for this connection are to be submitted for approval on a case-by-case basis.

(ii) Where the heat exchanger is enclosed in a cold box, the following requirements apply:

① The cold box is to be designed to withstand nitrogen purge pressures likely to be encountered in service and is to be fitted with pressure and vacuum relief devices to prevent over- and under pressurization.

② To prevent overpressuring of the cold box by leaking nitrogen or BOG/LNG, a safety relief valve is to be provided. The vent from the cold box safety relief valve is to be led to the weather deck.

③ Means of detecting boil-off gas leakage within the cold box is to be provided. The detection system is to give an audible and visual alarm at the cargo control station and the bridge upon detection of gas leakage.

④ Where the cold box is insulated, means are to be provided for continuous purging of the insulation spaces with nitrogen or other suitable inert gas.

(7) Safety systems are to comply with the followings.

(A) The temperature and pressures in the re-liquefaction unit are to be controlled as follows:

(a) A control and monitoring system is to be provided in the cargo control room. Additionally, a motor control panel is to be provided in the vicinity of the boil-off gas compressor and the refrigerant compressor motors.

(b) The design of the control system is to be such as to ensure identification of faults in the equipment, as well as the process system.

(c) All electrical control systems are to have two means of power supply and each is to be individually monitored for faults.

(B) An independent shutdown system is to be provided as follows:

(a) Means are to be provided to indicate the parameters causing shutdown.

(b) Upon activation of the safety shutdown system, alarms are to be given at the normal control position and at the local control position.
(c) The safety shutdown system is to be supplied by two sources of power.
(d) Means are to be provided to evacuate cargoes remaining in the system after a shutdown.

(C) Alarm and safety systems are to be provided as given in **Table 7.5.9.**

Table 7.5.9 Cargoes Which may React Chemically in a Dangerous Manner

Monitored parameters [H=High L=Low HH=High-high, LL=Low-low O=Abnormal status]				Alarm Activation	Automatic shutdown
BOG compressor	Flow rate		L LL	● ●	●
	Driving motors		O	●	
	LO temperatures		H	●	
	Suction side	Pressure	H L HH	● ●	●
		Temperature	H HH	● ●	●
	Discharge side	Pressure	L LL	● ●	●
		Temperature	H L HH	● ●	●
	Gas detection in cold box		30% LEL 60% LEL	● ●	●
	heat exchanger inlet temperature		H	●	●
Refrigerant compressor	Driving motors		O	●	
	Lubricating oil temperature		H HH	● ●	●
	Suction side	Pressure	L LL	● ●	●
		Temperature	H L HH	● ●	●
	Discharge side	Pressure	H HH	● ●	●
		Temperature	H L	●	
	Seal gas pressure		L LL	● ●	●

3. Heat Exchange

For the purpose of the requirements in **703. 2** of the Rules, the compressors for the refrigerant and other equipment that directly handle the refrigerant are, as a rule, to be installed within the cargo area. However, in case where proper means of detecting the leakage of the cargo into the refrigerant and shutting-off the inflow of the leaked cargo to the spaces outside the cargo area after the detection of leakage is established depending on the possibility of cargo leakage into the refrigerant pipes within the heat exchangers, this requirement may be dispensed with.

707. Segregation 【See Rule】

1. Requirement for carrying simultaneously cargoes or chemical reaction

The "cargoes which may react chemically in a dangerous manner" referred to in **707.** of the Rules means those cargoes in combination as given in **Table 7.5.10** of the Guidance. For other cargoes

not given in this Table, except for those given in the notes of the Table, decision is to be taken in each case upon investigating the physical properties.

Table 7.5.10 Cargoes Which may React Chemically in a Dangerous Manner

Group No.	Groups	Product name	6	7	16	19	30	31	35	36
6	Ammonia	Ammonia, anhydrous								
7	Aliphatic amines	Dimenthylamine Monoethylamine								
16	Alkylene oxides	Propylene oxide	H	H						
19	Aldehydes	Acetaldehyde	H	H						
30	Olefines	Butadiene Ethylene Propylene Butylene Methyl acetylene -propadiene alxtures								
31	Paraffins	Butane Ethane Methane (LNG) Propane								
35	Vinyl halides	Vinyl chloride								
36	Halogenated hydrocarbons	Ethyl chloride Methyl bromide Methyl chloride								

Notes:
1. [H] in Table denotes possibility of dangerous reaction whereas blank column signifies no possibility of such reaction.
2. In general, chlorine and ethylene oxide are to be individually refrigerated or not carried together with other cargo.
3. Nitrogen has no danger of reacting with other cargo.

708. Availability 【See Rule】

1. Stand-by unit and heat exchanger

For the purpose of the requirements in **708.** of the Rules, the stand-by unit of the refrigeration system and stand-by heat exchangers are to comply with the following requirements :

(1) The stand-by refrigeration system referred to in the requirements of the Rules does not include heat exchanger.

(2) Where the whole necessary capacity is shared by multiple sets of units, the capacity of the stand-by unit may be made in such a way that it compensates the capacity of one unit having the largest capacity among others.

(3) Where the refrigeration plants are all driven by electric motors, electrical supply to the motors is to be fed from two or more generators.

(4) The piping of the stand-by heat exchangers may, for example, be made as given in Fig **7.5.30** of the Guidance. In this case, the total capacity of the heat exchangers including stand-by unit is to be 125 % or more of the maximum requirement.

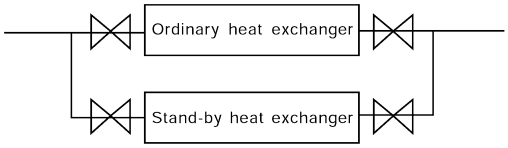

Fig 7.5.30 The example piping of the stand-by heat exchanger

2. Cooling water

(1) "Other essential service" referred to in the requirements in **708. 1** of the Rules means water supply to equipment necessary for propulsion, discharge of bilges, ballasting/deballasting and fire services specified in **Pt 5, Ch 1, 102. 1** of the Guidance. The service for the water spray system specified in the requirements in **1103.** of the Rules is to be included therein.

(2) In case where the stand-by cooling pump is used for service common to that given in the preceding (1), the capacity of this pump is not to be less than the total capacity of the maximum cooling requirement and the necessary capacity for the particular service.

Section 8 Vent System for Cargo Containment

801. General 【See Rule】

1. For the purpose of the requirements in **801.** of the Rules, the pressure relief system of hold spaces is to be in accordance with the following requirements :

(1) In hold spaces not regarded as the interbarrier space and in case where environmental control within the space is required in accordance with the provisions in **902.** and **903.** of the Rules, one or more pressure relief systems of sufficient capacity are to be provided. The set pressure of those pressure relief systems is to be so set as not to exceed the design pressure of the cargo containment system and hull construction under the condition of dry air sealing, inerting or voyaging. The location of the vent discharge outlet to which the exhaust from the pressure relief systems is to be in accordance with the requirements in **Pt 5, Ch 6, 201. 5** of the Rules, and in addition, consideration is to be given so as not to cause the inert gas to accumulate on deck.

(2) The pressure relief system of hold spaces regarded as the interbarrier space or part thereof is to conform to the requirements in **802. 1** of the Guidance.

(3) The evaluation of the adequacy of type C independent tank vent system is to be in accordance with requirements in **I MO Res. A. 829(19)**.

2. For the purpose of the requirements in **801.** of the Rules, the pressure relief system of interbarrier spaces is to be in accordance with **802. 1**.

802. Pressure relief systems 【See Rule】

1. Pressure relief system for interbarrier spaces

(1) The "pressure relief devices referred to in the requirements in **802. 2** of the Rules means pressure relief valves, rupture discs or equivalent. Two or more of them in combination are to be provided in each space to be covered.

(2) When only pressure relief valves are provided as the pressure relief devices given in the preceding (1), the following requirements (A) and (B) are to be complied with :

(A) In case where the cargo tank is of the type A independent tank, semi-membrane tank provided with complete secondary barrier, membrane tank or integral tank, the following requirements (a) and (b) are to be complied with :

(a) The capacity of the pressure relief system is to be sufficient to relieve the greater of the maximum supply capacity of the inerting system and dry air supply system or the estimated volume of cargo evaporation in an event of failure of the cargo tank.

(b) Pressure relief valves are to be in accordance with the requirements in **802. 5** of the Rules.

(B) In case where the cargo tank is of the type B independent tank or semi-membrane tank provided with partial secondary barrier, the following requirements (a) and (b) are to be complied with :

(a) The capacity of pressure relief device is to be in accordance with the preceding (A) (a).

(b) Pressure relief valves may not be such as being approved in accordance with the requirements in **802. 5** (1) of the Rules. However, they are to be equivalent to those complying with the requirements for PV valves in **Pt 8, Ch 9, 501.** of the Guidance.

(3) When, as a pressure relief device referred to in the preceding (1), pressure relief valve and rupture disc are provided in combination, they are to conform to the following requirements (A) to (C) for the cargo tank types indicated in the preceding (2) (A) : *(2022)*

(A) Pressure relief valves are to be in accordance with the requirements in the preceding (2) (B) (b).

(B) The total capacity of rupture disc and the pressure relief valve is to be sufficient to relieve the volume of cargo evaporation in an event of failure of the cargo tank, and the construction is to be as deemed appropriate by the Society.

(4) The relieving capacity of pressure relief devices for interbarrier spaces is to be determined as followings :

(A) The combined relieving capacity of the pressure relief devices for interbarrier spaces surrounding type A independent cargo tanks where the insulation is fitted to the cargo tanks may be determined by the following formula :

$$Q_{sa} = 3.4 A_c \frac{\rho}{\rho_v} \sqrt{h} \quad (\mathrm{m^3/s})$$

where:

Q_{sa} : minimum required discharge rate of air at standard conditions of 273K and 0.1013 MPa

A_c : design crack opening area ($\mathrm{m^2}$), $\pi \delta \, l/4$

δ : maximum crack opening width (m), 0.2 t

t : thickness of tank bottom plating (m)

l : design crack length equal to the diagonal of the largest plate panel of the tank bottom (m), see Fig **7.5.31** of the Guidance

h : maximum liquid height above tank bottom plus 10·MARVS (m)

ρ : density of product liquid phase at the set pressure of the interbarrier space relief device ($\mathrm{kg/m^3}$)

ρ_v : density of product vapour phase at the set pressure of the interbarrier space relief device and a temperature of 273 K ($\mathrm{kg/m^3}$)

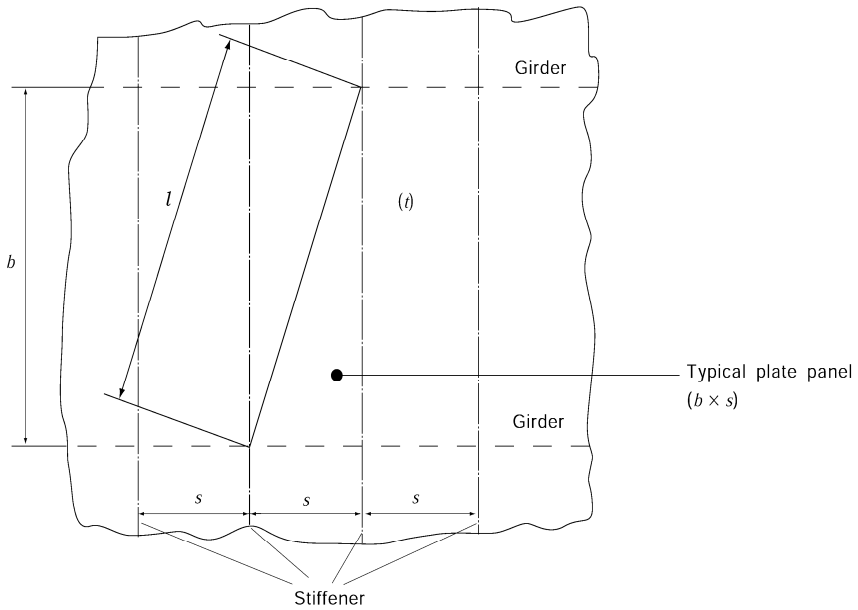

Fig 7.5.31 The example size of tank bottom plate

(B) The relieving capacity of pressure relief devices of interbarrier spaces surrounding type B independent cargo tanks may be determined on the basis of the preceding (A). However, the leakage rate is to be determined in accordance with **407. 2** of the Rules.

(C) The relieving capacity of pressure relief devices of interbarrier spaces of membrane and semi-membrane tanks is to be evaluated on the basis of specific membrane or semi-membrane tank design.

(D) The relieving capacity of pressure relief devices of interbarrier spaces adjacent to integral type cargo tanks may, if applicable, be determined as for type A independent cargo tanks.

2. Arrangement of pressure relief valves

For the purpose of the requirements in **802. 4** of the Rules, for the cargo tank with the design temperature lower than 0°C, it is to be verified through temperature distribution calculation, etc. that the valve would not freeze or it is provided with anti-freezing construction. In ships where the requirements in **Guidance for Ships for Navigation in ICE** apply or ships regularly navigate through the sea of cold zone, the pressure relief valves are to have satisfactory proved function under freezing condition or to be provided with heating system to prevent functional inability due to freezing.

3. Changing of set pressure of relief valves

The means as "necessary for isolating the valves not in use from the cargo tank" referred to in **802. 7** of the Rules means, for example, the arrangement as shown in Fig **7.5.32** of the Guidance.

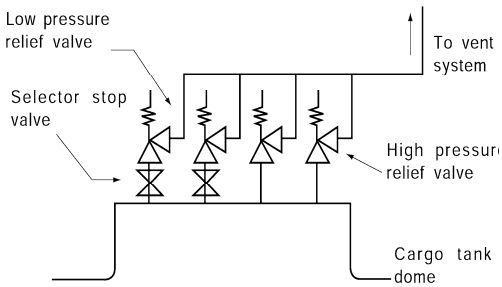

Fig 7.5.32

4. Safe means of emergency isolation of pressure relief valves

The "safe means of emergency isolation", as required by **803. 9** of the Rules, is to be provided so that a PRV can be isolated on a temporary basis to reseat or repair the valve before putting the PRV back into service. Such means of emergency isolation is to be installed in a manner that does not allow their inadvertent operation.

5. Venting system

(1) To "be so constructed that the discharge of gas will be directed upwards and so arranged as to minimize the possibility of water or snow entering the vent system" referred to in the requirements in **802. 10** of the Rules means for example, as shown in Fig **7.5.34** of the Guidance.

(2) For the purpose of the requirements in **802. 10** (3) of the Rules, the height of the vent discharge outlet is to be measured from the exposed deck at the place where the vent mast is provided.

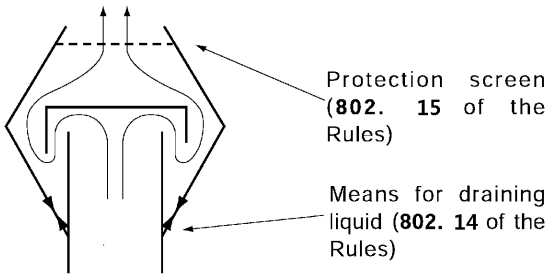

Fig 7.5.34 Example of Construction of Vent Discharge Outlet

6. Arrangement of vent exits

For the purpose of the requirements in **802. 11** of the Rules, the distance to the vent discharge outlet is to be measured horizontally.

7. Arrangement of all other cargo vent exits

For the purpose of the requirements in **802. 12** of the Rules, vent discharge outlets from pressure relief valves or rupture discs of interbarrier spaces are to be installed in gas dangerous zones.

8. Pressure relief system for carrying incompatible cargoes simultaneously

The "separate pressure relief system" referred to in the requirements in **802. 13** of the Rules means the independent vent system including an independently provided pressure relief valve. In this case, no specific requirement is provided on the distance between vent discharge outlets.

9. Means for draining of vent piping system

For the purpose of the requirements in **802. 14** of the Rules, drain plugs or drain cocks are to be provided at places, such as vent post bottoms and bend parts of vent pipes, where drains are likely to accumulate.

10. The "**IMO Res. A. 829(19)**" referred to in **802. 18** of the Rules means **Annex 7A-2.**

803. Vacuum protection systems

1. Fitting of vacuum protection systems 【See Rule】

(1) For the purpose of the requirements in **803. 1** (5) of the Rules, the means to stop all suction of the cargo liquid or cargo vapour may be by shutting off valves or stopping the equipment provided that they are automatically operated.

(2) For the purpose of the requirements in **803. 1** (6) of the Rules, the vacuum relief valve is to conform to the requirements in **802. 5** of the Rules and to be approved in accordance with the Guidance. However, means as specified in the requirements in **803. 1** (5) of the Rules are to be provided, and where vacuum relief valve adjusted to function at a pressure lower than such means is provided as an additional device, the requirements may be dispensed with for this vacuum relief valve as an additional means.

2. Requirement of vacuum protection systems 【See Rule】

For the purpose of the requirements in **803. 2** of the Rules, vacuum relief valves are to be in accordance with the following requirements (1) and (2) :

(1) Only for cases where vacuum relief valves adjusted to a set pressure lower than the operating pressure of the device specified in the requirements in **803. 1** (5) of the Rules, are provided for additional means of the devices, it may be accepted to admit the air to be introduced into the tank even in case of flammable cargoes except for the cases specified in the relevant requirements in **Sec 17** of the Rules.

(2) The air suction opening for the vacuum relief valve as an additional device indicated in the preceding (1) may be made in such a way that the requirements in **802. 10** and **11** of the Rules do not apply. However, the requirements in **Pt 5, Ch 6, 201. 5** of the Rules are to be complied with, and the construction of the suction opening is, for example, to be as shown in Fig **7.5.34** of the Guidance.

804. Size of pressure relieving system

1. Size of valves 【See Rule】

For the purpose of the requirements in **804. 1** (2) of the Rules, the fire exposure factor is to be in accordance with the following requirements (1) through (4) :

(1) The insulation materials used at exposed spaces when F = 0.5 are to conform to the requirements in **419. 5** (2) of the Guidance.

(2) In the case of integral tanks, F = 0.1.

(3) The fire exposure factor of the tank which partially protrudes beyond the tank cover having the fire integrity equivalent to the deck and deck structure is to be of such a value as obtained by proportional distribution of cargo tank surface areas above and below the deck or tank cover.

(4) In case where hold spaces filled with dry air is accepted for semi-membrane tanks provided with partial secondary barriers in accordance with the requirements in **902. 2** of the Rules, F = 0.2.

2. External surface area of the tank for determining sizing of pressure relief valve

In application to **Fig 7.5.19** of the Rules, external surface area for prismatic tanks is to be in accordance with followings;

(1) Lmin, for non-tapered tanks, is the smaller of the horizontal dimensions of the flat bottom of the tank. For tapered tanks, as would be used for the forward tank, Lmin is the smaller of the length and the average width.

(2) For prismatic tanks whose distance between the flat bottom of the tank and bottom of the hold space is equal to or less than Lmin/10:
A = external surface area minus flat bottom surface area.

(3) For prismatic tanks whose distance between the flat bottom of the tank and bottom of the hold space is greater than Lmin/10:
A = external surface area.

Section 9 Cargo Containment System Atmosphere Control

901. Atmosphere control within cargo containment system 【See Rule】

1. Gas-free and purge systems of cargo tanks

For the purpose of the requirements in **901. 1** of the Rules, the design and arrangement of gas-freeing and purging piping systems of cargo tanks are to be in accordance with the following requirements (1) and (2) :

(1) For installation of piping and fixing of pipe fittings in cargo tanks, sufficient consideration is to be taken for possible transient temperature differential.

(2) The effectiveness of replacement of cargo tank atmosphere is to be verified at time of gas trial given in **420. 4** of the Guidance.

2. Inerting of cargo tanks

For the purpose of the requirements in **901. 2** of the Rules, for cargo tanks carrying petroleum products, etc. the requirements in this Chapter apply, and in addition, the requirements specified in **Pt 8, Ch 1, 103. 9** (2) of the Guidance are to be complied with.

3. Monitoring of purging and gas-freeing

For the purpose of the requirements in **901. 4** of the Rules, the arrangement of gas sampling points in cargo tanks is to be determined according to the cargo properties, cargo tank construction and capacity and the abilities of gas-freeing and purging systems, and where appropriate, the adequacy of the arrangement of gas sampling points is to be verified by the performance test. The locations of gas sampling points are, as standard, to be at the upper, middle and lower space of the cargo tank.

902. Atmosphere control within the hold spaces (cargo containment systems other than type C independent tanks) 【See Rule】

1. Environmental control, requiring full secondary barriers

(1) For the purpose of the requirements in **902. 1** of the Rules, even in cases where full secondary barrier is not required according to the requirements in **405.** of the Rules, if flammable gases are carried in type A independent tank, integral tank, membrane tank and semi-membrane tank, the requirements in **902. 1** of the Rules apply correspondingly.

(2) The "suitable dry inert gas" referred to in the requirements in **902. 1** of the Rules means the inert gas of which dew point is controlled in accordance with **904. 1** (4) of the Guidance. Further, the "normal consumption for at least 30 days" referred to in the requirements in **902. 1** of the Rules is to be given consideration for the effects of atmospheric pressure and temperature variations during the passage and additional consumption by gas detection, etc.

2. Environmental control, requiring partial secondary barriers

(1) For the purpose of the requirements in **902. 1 and 2** of the Rules, even in cases where the provision of partial secondary barriers is not required according to the requirements in **405.** of the Rules, when flammable gases are carried by type B independent tank, the requirements in **902. 1 and 2** of the Rules apply.

(2) In cases where dry air is introduced into the interbarrier spaces and hold spaces, at least the following requirements (A) to (C) are to be complied with :

(A) Dew point of dry air is to be controlled according to **904. 1** (4) of the Guidance.

(B) On the supply piping of dry air, one stop valve is to be provided at the inlet into the space which is filled with dry air, and two non-return valves are to be provided within the cargo area side near the forward or aft end of the cargo area. However, one of the two non-return valves may be substituted by 3-in one set as Fig **7.5.35** of the Guidance.

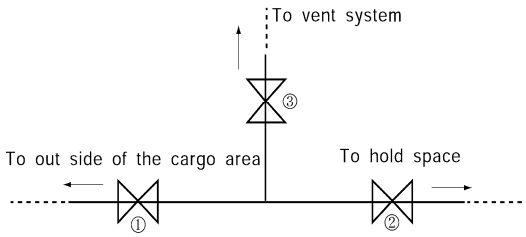

1) When dry air is being supplied, stop valves ① and ② are to be opened, and stop valves ③ is to be closed.
2) When dry air supply is stopped, stop valve ③ is to be opened, and stop valves ① and ② are to be closed.

Fig 7.5.35

(C) Instrumentation is to be provided in accordance with the following requirements (a) to (c) :
(a) At the outlet of the dry air supply system, pressure gauge and thermometer are to be provided.
(b) One or more dew point meters as deemed appropriate by the Society are to be provided. However, in case where only one dew point meter is provided, a spare cell unit is to be provided.
(c) At the outlet of the dry air supply system, interbarrier spaces and hold spaces, connections for dew point meter are to be provided.

3. Environmental control for non-flammable gases

(1) The "suitable dry air or inert atmosphere" referred to in the requirements in **902. 3** of the Rules means a state in which spaces are filled with the air with controlled dew point or inert gas according to the requirements in **904. 1** (4) of the Guidance. This inert gas system may not conform to the requirements in **904.** and **905.** of the Rules, but is to be provided with a storage system or generating system capable of making up a consumption for at least 30 days.
(2) In case where dry air is introduced according to the preceding (1), the requirements in **902. 2** (2) of the Guidance are to be complied with.

4. Environmental control for doble hull and double bottom spaces

Ventilation, inerting and gas measurements for double hull and double bottom spaces are to comply with the requirements in **Pt 8, Ch 2, 405. 1** (3), **407. 2** and **408.** of the Rules.

903. Environmental control of spaces surrounding type C independent tanks 【See Rule】

1. Environmental control of spaces surrounding type C independent tanks

For the purpose of the requirements in **903.** of the Rules, the environmental control of the compartment is to be in accordance with **902. 3** (1) and (2) of the Guidance.

904. Inerting 【See Rule】

1. Properties of inert-gas and its supply

For the purpose of the requirements in **904. 1** of the Rules, the following requirements (1) through (4) are to be complied with :

(1) For the inert gas supply piping, evaporator and heater, if necessary, are to be provided so that the compartment supplied with inert gas can be maintained at proper temperature and pressure and further, thermometer and pressure gauges are to be provided for monitoring.
(2) Where the inert gas is stored in inert gas bottles, the following requirements (A) through (D) are to be complied with :
(A) The inert gas bottles and piping are to be dealt with according to the following requirements (a) to (c) :
(a) The material of the piping may be according to the requirements of the standard as deemed appropriate by the Society.

(b) The gas bottle may be according to the requirements of the National Standards notwithstanding the requirements in **Pt 5, Ch 5, Sec 3** of the Rules.
(c) The hydraulic tests for pipes, valves and pipe fittings may be omitted.

(B) The location of installation of the bottles is to be as given in the following (a) and (b) :
(a) The inert gas bottles are, as a rule, to be located in the storage room within the cargo area.
(b) The storage room of inert gas bottles is to be well ventilated so as not to allow leaked gas accumulate the room and be capable of being accessed from the exposed deck.

(C) The inert gas bottles are to be so arranged to be safe against ship motions and vibrations, and are to be stored upright as far as practicable.

(D) The piping system, after assembly of board, is to be subjected to airtightness test at a pressure 1.25 times the maximum working pressure or more, and free flow test at a suitable pressure.

(3) Where the permanent storage tank installed on deck is used as the inert gas storage container, the requirements for the design, tests and inspection of the tank and the piping are to be in accordance with the relevant requirements specified for process pressure vessels and piping systems in **Sec 4** and **Sec 5** of the Rules. However, consideration may be given as appropriate depending on their service conditions.

(4) The dew point of dry inert gas is, in general, not exceed the minimum design temperature of the exposed surface of the insulation material of the cargo tank into the hold space and hul1 structural members of the space being inerted in normal condition.

2. Storage of inert gas at low temperature

For the purpose of the requirements in **904. 3** of the Rules, the thermal isolation between the hull structure and the storage tank, and where necessary, the inert gas supply piping is to be in accordance with **507. 1** of the Guidance.

3. Prevention of the back flow of cargo vapour

For the purpose of the requirements in **904. 4** of the Rules, the arrangement to prevent the back flow of cargo vapour from entering the inert gas system is to be in accordance with **502. 1** (1) of the Guidance. (See **Fig 7.5.36** of the Guidance)

4. Isolation of spaces being inerted

(1) For the purpose of the requirements in **904. 5** of the Rules, the isolation of the spaces being inerted such as cargo tanks, cargo piping system, process pressure vessels and their piping system from the inert gas system are to be in accordance with the preceding **Par 3.**

(2) The isolation of the interbarrier spaces, hold spaces where the cargo vapour does not exist in normal condition and the outer side of double wall gas fuel piping specified in the requirements in **1604. 3** (1) of the Rules may be by a stop valve.

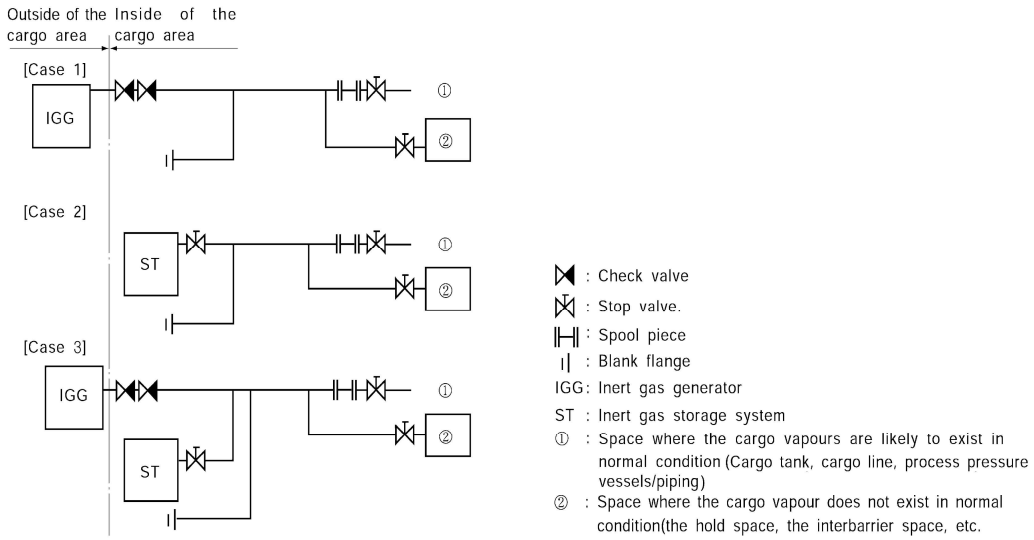

Fig 7.5.36

905. Inert gas production on board

1. Inert gas production equipment 【See Rule】

(1) For the purpose of the requirements in **905. 1** of the Rules, the combustion type inerting systems are to be in accordance with the relevant requirements of **Pt 8, Annex 8-5, 5** (1) to (5) of the Guidance and the following requirements (A) to (C). *(2020)*

(A) Inerting gas production equipment is to be provided with sufficient amount of suitable fuel oil.

(B) Where two sets or more inerting gas production equipments are provided, the stop valve is to be installed on the supply outlets of each equipment.

(C) Where the volumetric blower is provided in inerting gas production equipment, the pressure relief valves are to be installed on discharge outlets of blowers to prevent generating the over pressure.

(2) In addition to the preceding (1), nitrogen generating system is to be complied with the relevant requirements in **Pt 8, Annex 8-5, 5** (1) to (5) of the Guidance.

(3) The components of inerting gas production equipment given in the preceding (1) and (2) are to be approved by the Society.

Section 10 Electrical Installations

1002. General 【See Rule】

1. Certified safe type equipment

(1) Electrical equipment installed in hazardous areas is to be the explosion protected electrical equipment required by **Pt 6, Ch 1, Sec 9** of the Rules and having the performance classified by Gases and Vapours Group and Temperature Class according to **Table 7.5.11** of the Guidance by the type of vapour or equivalent.

(2) The words "recognized standards by the Society or equivalent thereto" referred to in **1002. 4** of the Rules mean **IEC 60079** series or equivalent thereto.

(3) In application to **1002. 4** of the Rules, if there is IECEx, ATEX, KC or equivalent explosion-proof certificate, type approval may be exempted.

Table 7.5.11 Gases and Vapours Groups and Temperature Class *(2020)*

Product name	UN number	Gases and vapours groups	Temperature class
Acetic aldehyde	1089	II A	T4
Ammonia, anhydrous	1005	II A	T1
Butadiene	1010	II B	T2
Butane	1011	II A	T2
Butane – propane mixtures	1011/1978	II A	T2
Butylenes	1012	※	※
Chlorine	1017	–	–
Diethyl ether	1155	II B	T4
Dimethylamine	1032	II A	T2
Ethane	1961	II A	T1
Ethyl chloride	1037	II A	T1
Ethylene	1038	II B	T2
Ethylene oxide	1040	II B	T2
Ethylene oxide – propylene oxide mixtures with ethylene oxide content of not more than 30 % by weight	2983	※	※
Isoprene	1218	II B	T3
Isopropylamine	1221	II A	T2
Methane (LNG)	1972	II A	T1
Methyl acetylene–propadiene mixtrues	1060	※	※
Methyl bromide	1062	※	※
Methyl chloride	1063	II A	T1
Monoethylamine	1036	II A	T2
Nitrogen	2040	–	–
Propane	1978	II A	T2
Propylene	1077	II A	T2
Propylene oxide	1280	II B	T2
Refrigerant gases (see notes)	–	–	–
Sulphur dioxide	1079	–	–
Vinyl chloride	1086	II A	T3
Vinyl ethyl ether	1302	II B	T3
Vinylidene chloride	1303	II A	T2

Notes:
1. Temperature classes and gases and vapours groups are as defined in IEC 60079.
2. 「—」 indicates that the product is non-flammable, and * is to be to satisfaction of the Societ

Section 11 Fire Protection and Fire Extinction

1101. Fire safety requirements 【See Rule】

1. Exclusion of ignition source

For the purpose of the requirements in **1101. 2** of the Rules, in the gas-dangerous zones or areas specified in the requirements in **105. 23** of the Rules, for ships carrying flammable substances, electrical equipment, windlasses, openings of chain lockers which are regarded as sources of ignition are not to be provided except for those approved under the relevant requirements in **Sec 10** of the Rules.

1102. Fire main and hydrants

1. Fire pump and fire main 【See Rule】

For the purpose of the requirements in **1102. 1** of the Rules, the minimum pressure at fire hydrant of the fire main is to be not less than 0.5 MPa gauge irrespective whether the fire pump and water main as used as part of water spray system or not.

2. Fire pump and fire main *(2022)* 【See Rule】

For the purpose of the requirements in **1102. 3** of the Rules, the complete interpretation of the phrase "Stop valves are to be fitted in a protected location" would be that the valve should be located within an accommodation space, service spaces or control station. However, the valve may be located on the open deck aft of the cargo area provided that the valve is located:

(1) at least 5 m aft of the aft end of the aftermost cargo tank or
(2) if the above (1) is not practical, within 5 m aft of the aft end of the aftermost cargo tank provided the valve is protected by a permanent steel obstruction.

3. Nozzles 【See Rule】

For the purpose of the requirements in **1102. 4** of the Rules, all nozzles provided for fire-fighting are to be in accordance with the relevant requirements of **Pt 8, Ch 8** of the Rules.

1103. Water spray system

1. Area to be covered *(2024)* 【See Rule】

(1) For the purpose of the requirements in **1103. 1** (1) of the Rules, the area to be covered at the exposed tank dome is to include the areas where stop valves for cargo tanks and emergency shutdown valves specified in the requirements in **505. 2** of the Rules are fitted.
(2) T(2) For the purpose of the requirements in 1103.1 (4) and (5) of Rules, where vessels is provided with additional cargo transfer equipment including transfer loading arms, bunkering booms, transfer hoses, reducers, spool pieces and transfer hoses reels, this additional cargo transfer equipment is to comply with Annex 7A-3, 701.3.(2024)
(3) For the purpose of the requirements in 1103.1 (4) and (5) of Rules, where vessels is provided with additional cargo transfer quipment including transfer loading arms, bunkering booms, transfer hoses, reducers, spool pieces and transfer hoses reels, this dditional cargo transfer equipment is to comply with Annex 7A-3, 701.3.(2024)
(4) The "high fire risk items" referred to in the requirements in 1103. 1 (6) of the Rules are not to include the hydraulic machinery and electric motors.
(5) Survival crafts protection *(2019)*
With reference to 1103. 1 (7) of Rules, the survival crafts on board including remote survival crafts (ref. SOLAS III/Reg. 31.1.4) facing the cargo area are to be protected by a water-spray system taking into consideration cargo area extension for fire-fighting purposes as stated in 1101. 4 of Rules. Remote liferafts located in areas covered by water-spray protection as required in 1103. 1 (6) of Rules may be considered as adequately protected.

2. Arrangement and capacity *(2024)* 【See Rule】

For the purpose of the requirements in **1103. 2** of the Rules, the following requirements (1) to (2) are to be complied with :

(1) The nozzles for protecting vertical surfaces are to be arranged per every two tiers for the end walls of the accommodation spaces, as standard.

3. Tank groups in cargo area *(2019)*

In applying the requirement in **1103. 3.** (1) of the Rules, "two complete athwartship tank groupings" means any two groups of tanks where one group is defined as tanks located in transverse direction from ship side to ship side. Where there is only one cargo tank occupying a hold space from ship side to ship side, it will be considered as a "grouping" for the purpose of this interpretation. "Any two complete athwartship tank groupings" represents an area equal to the combined area of the two largest tank groupings including any gas process units within these areas.

4. Fire pumps used as spray pumps 【See Rule】

In cases where the emergency fire pump is used to meet **1103. 4** of Rules, its capacity, in addition to being capable of maintaining two jets of water as required by paragraph 12.2.2.1.1 of the FSS Code, is to be increased taking into account the spray application rates stated in **1103. 2** of Rules, but limiting coverage to boundaries of normally manned superstructures and deckhouses, survival crafts and their muster areas. For the purpose of **1103. 4** of Rules:

(1) the expression "one of the fire pumps or emergency fire pump" is related to fire pumps required by SOLAS regulation II-2/10.2.2 installed outside the space where spray pump(s) are located and
(2) the expression "fire in one compartment" means a compartment provided with Aclass boundaries in which is located the fire pump(s), or the source of power of the fire pump(s), serving the water-spray system in accordance with **1103. 3** of Rules.

5. Fire pumps used as spray pumps 【See Rule】

(1) For the purpose of the requirements in **1103. 4** of Rules the term "fire pumps" where not qualified by the word "emergency" refers to the fire pumps required in accordance with SOLAS Reg.II-2/10.2.2.2.2.
(2) If all the fire pumps mentioned in (1) above supplying the water spray system (for covering the superstructures and deckhouses) are disabled due to a fire in any one compartment; then the emergency fire pump is to be sized to cover:
  (A) the water spray system for the boundaries of the superstructures and deckhouses, and lifeboats, liferafts and muster areas facing the cargo area, (as per **1103. 4** of Rules) and
  (B) two fire hydrants (as per **1102** of Rules).
(3) When the ship is also fitted with a total flooding high expansion foam system protecting the engine-room (to comply with SOLAS II-2/10.4.1.1.2 and 10.5.1.1) and the emergency fire pump is intended to supply sea water to this system, then, the emergency fire pump is to also be sized to cover the foam system for dealing with an engine-room fire, when the main fire pumps are disabled.
(4) On the basis of the principle of dealing with one single fire incident at a time, the emergency fire pump does not need to be sized to cover all three systems in (2) and (3) above (i.e. water spray, hydrants and foam) at the same time and is to need only be sized to cover the most demanding area and required systems, as follows:
  (A) the foam system + two hydrants or
  (B) the water spray system + two hydrants; whichever is greater.

6. Use for other services 【See Rule】

For the purpose of the requirements in **1103. 5** of the Rules, the ballast pump and bilge pump may be used commonly for the water spray system.

7. Back-flushing of the water-spray system

In application to **1103. 6** of the Rules, The last sentence i.e. "In addition, means shall be provided to back-flush the system with fresh water", is to be understood to mean that arrangements should be provided so that the water-spray system as a whole (i.e. piping, nozzles and in-line filters) can be flushed or back-flushed, as appropriate, with fresh water to prevent the blockage of pipes, nozzles and filters. (*2018*)

8. Extension of cargo area

Where "F.O. tanks" are installed at the after end of the aftermost hold space or at the forward end of the forwardmost hold space instead of cofferdams as allowed for in paragraphs **301. 2** and **3** of

the Rules, the weather deck area above these tanks is to be regarded as a "cargo area" for the purpose of applying **1103. 6** of the Rules. *(2020)*

1104. Dry chemical powder fire-extinguishing systems 【See Rule】

1. Component of the systems

For the purpose of the requirements in **1104. 2** of the Rules, dry chemical powder fire-extinguishing systems may be accepted to be approved by flag administration in lieu of the Society. *(2017)*

2. For the purpose of the requirements in **1104.1** and **3** of Rules, where vessels is provided with additional cargo transfer equipment including transfer loading arms, bunkering booms, transfer hoses, reducers, spool pieces and transfer hoses reels, this additional cargo transfer equipment is to comply with **Annex 7A-3, 701.3**.*(2024)*

3. Monitors and hand hose lines

For the purpose of the requirements in **1104. 3** of the Rules, the manifold areas may be protected by only one monitor provided that it can be so fixed to protect the manifold area used for cargo operation even if there are manifolds on both sides of the ship.

4. Capacity of dry chemical powder

For the purpose of the requirements in **1104. 5** of the Rules, when the areas to be covered are located higher than the installed positions of monitors and manual hose reels, the Society may request increase in the capacity of these monitors and manual hose reels depending on their arrangement.

5. Testing of systems

For the purpose of the requirements in **1104. 8** of the Rules, testing arrangements are to involve the discharge using dry chemical powder from all monitors and hand hose lines on board but it is not required that there is a full discharge of the installed quantity of dry powder. This testing can also be used to satisfy the requirement that the piping is free of obstructions, in lieu of blowing through with dry air all the distribution piping. However, after the completion of this testing, the system, including all monitors and hand hose lines, is to be blown through with dry air but only for the purpose of the system subsequently being clear from any residues of dry chemical powder. (*2020*)

1105. Cargo compressor and pump rooms

1. Fixed fire-extinguishing installation for cargo compressor and pump rooms 【See Rule】

For the purpose of the requirements in **1105. 1** of the Rules, the fixed gas fire-extinguishing systems for cargo compressor and pump rooms are to be in accordance with the requirements following (1) through (6). Independent inert gas system is to be provided, if the fire-extinguishing medium is not compatible with inerting.

(1) The fixed gas fire-extinguishing system is to conform to the relevant requirements in **Pt 8, Ch 8** of the Rules correspondingly.

(2) In the case of carbon dioxide hydro-carbon fire-extinguishing systems, the requirements in **Ch 6, 1102. 1** of the Rules are to be complied with.

(3) In the case of the nitrogen gas fire-extinguishing system, the volume of nitrogen gas is to be not less than that multiply following values by total volume of the relevant spaces and also to be in accordance with national requirements.

$$\frac{21 - O_2}{21} \times 1.2$$

where :

O_2 : limit volume of carbon (Vol%)

(4) The storage containers and pipings for nitrogen gas fire-extinguishing system are to be such that nitrogen gas equal to 85 % of the volume of preceding (3) can be discharged into the space within 2 minutes.

(5) The boundaries of cargo compressor and pump rooms in relation to the requirements in **1105.** of the Rules is to remain in a state corresponding to "A-0" class fire integrity including doors, etc. of the boundaries. Packing provided for doors is, as a rule, to be of non-combustible material defined in the relevant requirements in **Pt 8, Ch 1, 103.** of the Rules. However, in case where special consideration is taken for structural details in way of openings, materials and quantity of the packing, the packing need not be of non-combustible one.

(6) Notwithstanding the requirements in the preceding (5), when steel blind covers are provided for the windows fitted on the boundary of the compartment and the exposed area, these windows may not be "A-0" class. Further, at the boundary to electric motor room, no windows are to be provided unless they correspond to "A-0" class.

Section 12 Mechanical Ventilation in the Cargo Area

1201. Spaces required to be entered during normal cargo handling operations *(2019)*

1. Arrangement of ventilation intakes

For the purpose of the requirements in **1201. 2** of the Rules, ventilation intakes are, at least, to be located in the gas-safe areas.

2. Construction of ventilation fans 【See Rule】

For the purpose of the requirements in **1201. 7** of the Rules, the following requirements (1) and (2) are to be complied with :

(1) Ventilation fans are to be approved in accordance with the Guidance.

(2) The ventilation fans for motor rooms where electric motors to drive cargo compressors and cargo pumps are installed are to conform to the requirements in **1201. 7** of the Rules, and in addition, to the following requirements (A) and (B) :

(A) To have a ventilation capacity of not less then 30 air changes of the total volume of the motor room per hour.

(B) Electric motors driving ventilation fans are to conform to the relevant requirements in **Ch 5, Sec 10** of the Rules depending on the location of motors, and in addition, to the requirements for exterior-mounted type specified in **Pt 8, Ch 12, 201. 4** (2) of the Guidance when motors are installed in exposed spaces.

3. In application to **1201. 7** of the Rules, where electric motors for ventilation fans are certified for the same hazard zone as the space served, the motors may be located in ventilation ducts for hazardous space. *(2017)*

1202. Spaces not normally entered 【See Rule】

1. Ventilation of hold spaces

(1) Natural ventilation alone is not acceptable.

(2) In application to **1202.** of the Rules, portable mechanical ventilation systems approved by the Society.

Section 13 Instrumentation and Automation Systems

1301. General

1. Centralization of controls equipments and indicators 【See Rule】

For the purpose of the requirements in **1301. 2** of the Rules, in case where control equipment and indicators are unable to be centralized in the cargo control room or other suitable places, they are to be provided in the wheelhouse.

2. Calibration and test of measuring instruments 【See Rule】

For the purpose of the requirements in **1301. 3** of the Rules, tests and inspections of measuring instruments are to be in accordance with the following requirements (1) to (3) :

(1) Tests and inspections of measuring instruments during manufacture of each are to conform to the following requirements (A) to (C) :
  (A) Gas detection equipment are to be in accordance with the requirements in the Guidance.
  (B) Level gauges are to be in accordance with the requirements in the Guidance for Approval of Manufacturing Process and Type Approval, Etc.
  (C) Pressure gauges and temperature indicating devices are to be in accordance with the requirements of the standards recognized by the Society or are to be manufactured under effective quality control system and to be ensured for their reliability.

(2) After installation on board the ship, the instrument is to be subjected to operation test to verify that it has the specified performance. This test is not necessarily conducted with the actual cargo, but for gas detection equipment, suitable test gases are to be used in the test.

(3) For retests and testing procedures of instrumentation after installation on board the ship, at least the following items are to be noted in the Operation Manual specified in the requirements in **1803. 1** of the Rules :
  (A) Check method and testing procedure before use
  (B) Check method and testing procedure during use
  (C) Periodical check method and intervals specified by the manufacturer
  (D) Service life of equipment (excluding those permanent system components)
  (E) Periodical inspection procedure specified in the requirements in **Pt 1, Ch 2, 204.** (4) of the Rules
  (F) Other precautions

1302. Level indicators for cargo tanks 【See Rule】

1. General

For the purpose of the requirements **1302. 1** of the Rules, the following requirements (1) and (2) are to be complied with :

(1) The performance and construction of level gauges are to be approved according to the Guidance for Approval of Manufacturing Process and Type Approval, Etc.

(2) The effectiveness and number of units of level gauges are to be in accordance with the following requirements (A) and (B) :
  (A) Where only one level gauge is fitted, it is to be arranged so that any necessary maintenance can be carried out while the cargo tank is in service.
  (B) For example, in case where gauging of levels is limited at high level and low level, such level is considered effective on condition that cargo is loaded within such range.

2. For the purpose of the requirements in **1302. 2** of the Rules, in order to assess whether or not only one level gauge is acceptable in relation to the aforesaid sentence, the expression "can be maintained" means that any part of the level gauge other than passive parts can be overhauled while the cargo tank is in service. However, passive parts are those parts assumed not subject to failures under normal service conditions. *(2020)*

3. Type of level indicators

For the purpose of the requirements in **1302. 3** of the Rules, in case where the prospective cargoes are plural and the type of level gauges required in column g in Table of **Sec 19** of the Rules is also plural where two or more level gauges are provided for each requirement (in the case

shown in **1** (2) (A) above, may be one), they may be multiplicate. However, for the type of level gauge for less severe requirements, warning sign stating that the level gauge is not to be used for other cargoes than the specified cargoes is to be posted.

1303. Overflow control 【See Rule】

1. General

For the purpose of the requirements in **1303. 1** of the Rules, the following requirements are to be complied with :

(1) High level alarm systems are to be in accordance with **Pt 8, Ch 9, 503. 1** of the Rules.
(2) The sensor for automatic closing of the loading valve for overflow control may be combined with those of level gauges required in **1302. 1** of the Rules.

2. Omission of automatic shutoff

The "maximum possible pressure during the loading operation" referred to in the requirements in **1303. 4** (2) of the Rules is to be considered as the maximum pressure generated by the discharge pressure of shore-based transfer pump and cargo vapour pressure.

3. Test for cargo tank's high level alarm *(2018)*

For the purpose of the requirements in **1303. 2** and **5** of the Rules, the following requirements are to be complied with :

(1) The expression "each dry-docking" is considered to be the survey of the outside of the ship's bottom required for the renewal of the Cargo Ship Safety Construction Certificate and/or the Cargo Ship Safety Certificate.

1304. Pressure gauges

1. Pressure gauges and alarms of cargo tanks

(1) The low pressure alarm provided on the navigation bridge under the requirements in **1304. 2** of the Rules, when the provision of vacuum relief valve is required by the provision in **803. 1** of the Rules, is to be capable of issuing alarm at a suitable differential pressure between inside and outside of cargo tank, which is lower than the maximum design external pressure of the cargo tank. 【See Rule】
(2) The alarm system specified in the requirements in **1304. 2** and **3** of the Rules is to issue visible and audible alarms. 【See Rule】

1306. Gas detection

1. For the purpose of the requirements in **1306. 4** of the Rules, two oxygen sensors are to be positioned at appropriate locations in the space or spaces containing the inert gas system, in accordance with paragraph 15.2.2.4.5.4 of the FSS Code, for all gas carriers, irrespective of the carriage of cargo indicated by an "A" in column "f" in the table in chapter 19 of the Code. *(2021)*

2. Gas detection equipment for toxic products 【See Rule】

For the purpose of the requirements in **1306. 5** of the Rules, the use of portable gas detecting equipment is to be in accordance with the following requirements :

(1) At least two sets of portable gas detecting equipments are to be provided on board.
(2) In the case of the cargo expressed in "$F+T$" in column f in Table of **Sec 19** of the Rules, the fixed type flammable gas detecting device specified in the requirements in **1306. 14** of the Rules is to be provided additionally.
(3) In case where the equipments are composed of consumables such as detecting tubes, suitable spare parts such as detecting tubes are to be provided on board in addition to the equipments specified in the preceding (1) by taking into account the shipboard work and the frequency of carriage of the cargo. In the case of the detecting tube type, detecting tubes are to be provided for each kind of loadings cargos as above requirement, but two suction pumps for each type of the portable detection equipments may be enough.

3. Gas detection for cargo containment systems other than independent tanks 【See Rule】

For the purpose of the requirements in **1306. 14** of the Rules, the gas detection equipment for hold spaces and interbarrier spaces of cargo tanks other than independent tanks are to be in accordance with the following requirements :

(1) In the case of integral tanks, the requirements in **1306. 14** of the Rules do not apply. However, the requirements in **1306. 2** (2) of the Rules apply to the hold space of this cargo containment system.

(2) The available measuring range of gas detector is to be ordinarily made under the graduation where the lower explosive limit is taken as 100% but the range may be changeable to measure gas concentration between 0 % and 100 % in volumetric percent if necessary.

4. Instruments for measurement of oxygen levels 【See Rule】

The "suitable instrument for the measurement of oxygen levels" referred to in the requirements in **1306. 20** of the Rules means the one that can measure oxygen concentration in an inert atmosphere and is adequate to international/national standards recognized by the Society or SOLAS Reg. XI-1/7. *(2024)*

1307. Additional requirements for containment systems requiring a secondary barrier

1. Temperature indicating devices of hull structure when a cargo is carried at a temperature lower than -55°C 【See Rule】

The word, "where applicable" referred to in the requirements in **1307. 2** (2) of the Rules means the case where provision is made for heating the structural hull members as specified in the requirements in **419. 1** (5) of the Rules. At four points, at least, on double bottom tank top platings, the temperature sensors are to be provided.

2. Temperature indicating devices of cargo tanks when a cargo is carried at a temperature lower than -55°C

For the purpose of the requirements in **1307. 2** (3) of the Rules, the temperature indicating devices for cases of carrying the cargo at a temperature lower than -55°C are to be in accordance with the following requirements :

(1) In order to verify the cooling down or loading procedures according to the requirements in **413. 4** (1) of the Guidance, temperature indicating devices required in the provisions in **1307. 2** (3) of the Rules are to be provided.

(2) The temperature sensors provided for verifying the cooling down procedure specified in the requirements in **1307. 2** (4) of the Rules are to be arranged under considering the arrangement of spray nozzles and construction of cargo containment system. For the other cargo tanks which can be regarded as having the same construction and arrangements as the cargo tanks provided with above sensors, the temperature indicating devices specified in the requirements in preceding **1305. 1** and **1307. 2** (3) of the Rules may only be provided.

1309. System integration *(2020)* 【See Rule】

1. For the purpose of the requirements in **1309. 3** of the Rules, the expression “integrated system” means a combination of computer-based systems which are used for the control, monitoring/alarm and safety functions required for the carriage, handling and conditioning of cargo liquid and vapours and are interconnected in order to allow communication between computer-based systems and to allow centralized access to monitoring/alarm and safety information and/or command/control.

Section 15 Filling Limits for Cargo Tanks

1504. Determination of increased filling limit (IGC Code 15.4) 【See Rule】

1. Determining PRV inlet remains in vapour space

For the purpose of the requirements in **1504. 1** (2) of the Rules, the PRV inlet shall remain in the vapour space under conditions of 15° list and 0.015L trim.

2. Calculation of Allowances

For the purpose of the requirements in **1504. 1** (3) of the Rules, The following method may be used to determine the allowance. The Society may accept other methods to determine the allowance provided the method meets an equivalent level of safety.

The parameters specified under **1504. 1** (3) of the Rules may be expressed by the expansion factors α_1 through α_4 as follows:

α_1 : relative increase in liquid volume due to tolerance of level gauges
α_2 : relative increase in liquid volume due to the tolerance of temperature gauges
α_3 : expansion of cargo volume due to pressure rise when pressure relief valves are relieving at maximum flow rate
α_4 : operational margin of 0.1%

The factors α_1 through α_4 are to be determined as follows:

$$\alpha_1 = \frac{dV}{dh}\left(\frac{\Delta h}{V}\right) \cdot 100 \ (\%)$$

where:
dV/dh : variation of tank volume per metre filling height at the filling height h (m^3/m).
h : filling height (m) at the filling limit FL to be investigated (FL 〉 98%) (m).
V : accepted total tank volume (m^3)
Δh : max. total tolerance of level gauges (m).

$$\alpha_2 = \beta \times \Delta T(\%)$$

where:
β : volumetric thermal expansion coefficient at reference temperature (%/K)
ΔT : max. tolerance of temperature gauge (K).

$$\alpha_3 = \left(\frac{\rho_{PRV}}{\rho_{PRV \cdot 1.2}} - 1\right) \cdot 100\,(\%)$$

where:
ρ_{PRV} : ρ_R cargo density at reference conditions, i.e. corresponding to the temperature of the cargo at set opening pressure of the pressure relief valve
$\rho_{PRV \cdot 1.2}$: cargo density corresponding to the temperature of the cargo at 1.2 times the set opening pressure of the pressure relief valve

α_4 : 0.1% operational margin

Based on the factors α_1 through α_4 the following total expansion factor αt is to be determined.

$$\alpha_l = \sqrt{\alpha_1^2 + \alpha_2^2} + \alpha_3 + \alpha_4 \quad (\%)$$

1505. Maximum loading limit 【See Rule】

1. For ships constructed before 1 July 2016 and subject to **IMO Res. MSC.5(48)**, type C cargo tanks can be loaded in accordance with **1505. 2** of the Rules or alternatively, to **1505. 1**.

Section 16 Use of Cargo as Fuel

1601. General

1. In the application of 1601. 1, the Annex 7C applies to ships which are prepared for conversion with the design or the partial installation for use of cargo as fuel during the new building phase(hereafter referred to as "Cargo fuel ready ships" in the Guidance) for the purpose of a conversion from a ship using conventional marine fuels to cargo fuel after delivery.

1606. Special requirements for main boilers 【See Rule】

1. The "on the pipe of each gas burner, a manually operated shut-off valve is to be fitted" referred to the requirements in **1606. 3** of the Rules is to be in accordance with Fig **7.5.39** of the Guidance.

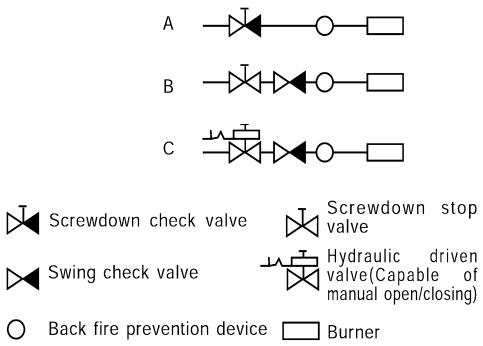

Fig 7.5.39

1607. Special requirements for gas-fired internal combustion engines 【See Rule】

1. For the purpose of the requirements in **1607.** of the Rules, dual-fuel diesel engines utilizing Methane gas as fuel(hereinafter referred to as DFD engines) are to comply with the followings.

(1) For LNG carriers fitted with DFD engines, the an additional installation notation of DFDE(LNG) may be assigned. *(2021)*

(2) Control and safety systems of DFD engines are to comply with **Pt 5**, **Annex 5-7** of the Guidance.

2. A suitable pressure relief system for air inlet manifolds, scavenge spaces and exhaust system is to be provided unless designed to accommodate the worst-case overpressure due to ignited gas leaks or justified by the safety concept of the engine. A detailed evaluation regarding the hazard potential of overpressure in air inlet manifolds, scavenge spaces and exhaust system is to be carried out and reflected in the safety concept of the engine.

In the case of crankcases, the explosion relief valves, as required by **1607. 1** (4) of the Rules, are to be considered suitable for the gas operation of the engine. For engines not covered by said Regulation, a detailed evaluation regarding the hazard potential of fuel gas accumulation in the crankcase is to be carried out. *(2021)*

3. For the purpose of the requirements in **1607. 3** (3) of the Rules, gas detection for crankcases may be installed in crankcase vent.

Section 17 Special Requirements

1705. Cargoes requiring type 1G ship 【See Rule】

1. In application to **1705. 5** of the Rules, the term "the satisfaction of the Society" means a space designed and equipped to protect crew members considering designated number of occupants and prevention from ingress of cargo.

1718. Propylene oxide and mixtures of ethylene oxide-propylene oxide with ethylene oxide (content of not more than 30 % by weight)

1. **Valves, flanges and fittings** 【See Rule】

   For the purpose of the requirements in **1718. 10** of the Rules, the materials for insulation and packing with neoprene, natural rubber, asbestos and binders used with asbestos are not to be used. The materials containing oxides of magnesium, also are not to be used.

2. **Padding of nitrogen gas** 【See Rule】

   For the purpose of the requirements in **1718. 27** of the Rules, the nitrogen gas generator of membrane type capable of ensuring a purity not less than 99% in volume may be used.

Section 18 Operating Requirements

1809. Cargo sampling

1. 1809. of the Rules is only applicable if such a sampling system is fitted on board. Connections used for control of atmosphere in cargo tanks during inerting or gassing up are not considered as cargo sampling connections.

1810. Cargo emergency shutdown (ESD) system

1. Emergency shutdown valves 【See Rule】

The emergency shutdown valves specified in **1810. 2** (1) of the Rules are to be in accordance with the following requirements (1) to (4) :

(1) When ESD valve is actuated by hydraulic or pneumatic system, the following is to complied with *(2024)*

(A) Audible and visible alarm is to be given in the event of loss of pressure that causes activation of fail-close action. The alarm is to be provided in a normally manned control station (e.g. Cargo Control Room and/or the navigation bridge, etc.).

(B) The following conditions are to also be complied to ensure the fail-close action:

(a) Failure of hydraulic or pneumatic system is not to lead to loss of fail-close functionality (i.e. activated by spring or weight); or

(b) Hydraulic or pneumatic system for fail-close action is to be arranged with stored power and separated from normal valve operation.

(2) To "be capable of local manual closing operation" referred to in the requirements of the Rules means the one which can be directly manually closed, and in addition those shutdown by manual release of hydraulic pressure or pneumatic pressure or shutdown by manual pump.

(3) To "fully close under all service conditions within 30 s of actuation" referred to in the requirements of the Rules means that the emergency shutdown valve assumes the completely closed within 30 s from the issuance of closing signals of the valve. This provision may not apply to the manual emergency shutdown valves given in the preceding (3).

(4) No stop valve is to be provided on the hydraulic or pneumatic line for closing the emergency shutdown valve.

2. In applying “operation of cargo pumps and the opening of manifold ESD valves is to be inhibited” of **note 4** of **Table 7.5.12**, a hardware system such as an electric or mechanical interlocking device is to be provided to prevent inadvertent operation of cargo pumps and inadvertent opening of manifold ESD valves. *(2021)*

3. For the purpose of the requirements in **1801.3** (2) of Rules, where vessels is provided with additional cargo transfer equipment including transfer loading arms, bunkering booms, transfer hoses, reducers, spool pieces and transfer hoses reels, this additional cargo transfer equipment is to comply with **Annex 7A-3, 701.3**.*(2024)*

Section 19 Summary of Minimum Requirements

The requirements for the construction and equipment of the ship when the cargo recognized to have equivalent danger of the liquefied gas or other cargo indicated in **Sec 19** of the Rules is carried are to be determined according to the physical properties (vapour pressure, liquid density, latent heat of evaporation, etc.) of the cargo as far as the basic design of the construction and equipment are concerned unless otherwise required by the Administration. Further, each item of the minimum requirements and special requirements of **Sec 19** of the Rules are to be determined individually. **【See Rule】** ⚓

CHAPTER 6 SHIPS CARRYING DANGEROUS CHEMICALS IN BULK

Section 1 General

101. General

1. Application 【See Rule】

(1) Where the products specified in Table of **Sec 17** of the Rules are added to the cargo carried in bulk to maintain the properties of the cargo, the requirements in **Ch 6** of the Rules may not apply to such additive cargoes. However, in consideration of the properties and quantity of such additive cargoes, additional requirements for tank vent system, electrical installations, instrumentation, safety equipment, etc. may be applied.

(2) Where the mixed products not reacting with each other such as polymer, etc. are carried, all requirements for the product separated each other are to apply.

106. Definitions 【See Rule】

1. Definitions

(1) For the purpose of **Ch 6** of the Rules and the Guidance, the term "adjacent" means all cases of facial contact, linear contact and point contact unless otherwise specified.

(2) The term "cargo area" referred to in **106. 6** of the Rules excludes the fuel oil tanks adjacent to the cargo tanks or slop tanks of the arrangement as given in Fig **7.6.1** of the Guidance. However, the requirements specified in **Ch 6, 304.** of the Rules apply.

(3) Regarding the cargo spaces in **106. 6** of the Rules, the following interpretation is provided: (refer to **Fig. 8.1.1** of the **Rule Pt 8 Ch 1**) *(2026)* **[See Rule]**

- A non-hazardous space in the forecastle area which is protected from the cargo tanks by cofferdam, void space or other compartments, will not be defined as part of cargo area.
- Compartments located above the Cofferdam, void or other compartments protecting the non-hazardous spaces will be defined as part of the cargo area.

(4) The piping system "separated" from each other as referred to in **106. 32** of the Rules mean either of the following : **【See Rule】**

(A) Piping system completely independent from each other.

(B) The piping system that come through with the tank carrying other cargo, but can be separated by the means as exemplified in [Acceptable] in Fig **7.6.2** of the Guidance when cargoes likely to cause dangerous reaction with each other are carried may be regarded as those completely independent from each other. In case where separation can be achieved by this method, operational precautions are to be noted in the Operation Manual.

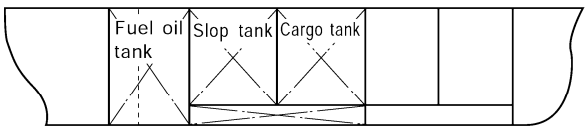

Fuel oil tank(port and starboard side)

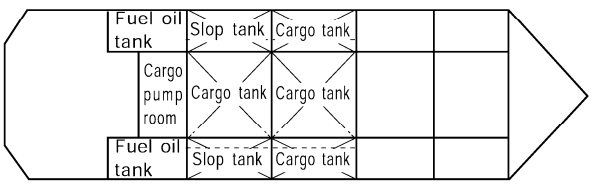

Fig. 7.6.1

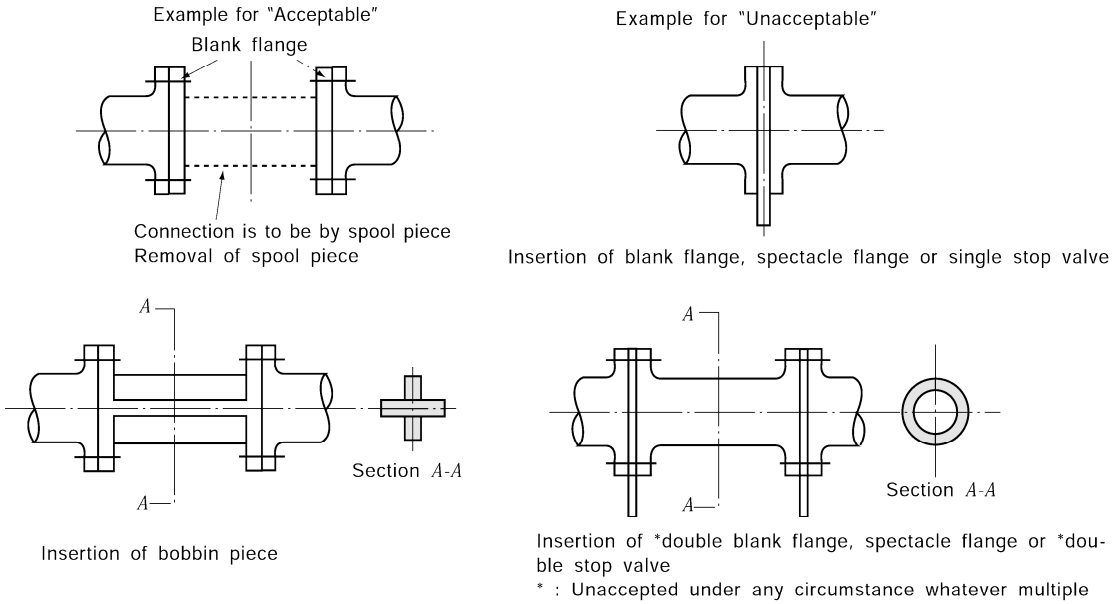
Example for "Acceptable"
Blank flange
Connection is to be by spool piece
Removal of spool piece
Example for "Unacceptable"
Insertion of blank flange, spectacle flange or single stop valve
A
A
Section A-A
Insertion of bobbin piece
A
A
Section A-A
Insertion of *double blank flange, spectacle flange or *double stop valve
* : Unaccepted under any circumstance whatever multiple

Fig. 7.6.2

Section 2 Ship Survival Capability and Location of Cargo Tanks

202. Freeboard and intact stability 【See Rule】

1. Solid ballast

Where the requirements for the initial stability are not satisfied, use of solid ballast may be approved. When solid ballast is provided directly below the tank, the distance between the top of solid ballast and cargo tank bottom is to be not less than the vertical extent of damage(V_s) as given Fig **7.6.3** of the Guidance.

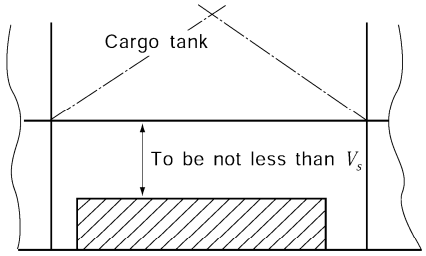

Shaded section : Solid ballast
V_s: Vertical extent of damage given in **205.** of the Rules

Fig. 7.6.3

2. In applying the requirement in **202. 2** of the Rules, for the ships assigned tropical loadline, 'all seagoing conditions' is to be included loading condition relating to tropical loadline.

3. In applying the requirements in **202. 6** of the Rules, the performance standards recommended by the Organization refer to following: 【See Rule】

- part B, chapter 4, of the International Code on Intact Stability, 2008 (2008 IS Code)
- the Guidelines for the Approval of Stability Instruments (MSC. 1/Circ.1229), annex, section 4
- the technical standards defined in part 1 of the Guidelines for verification of damage stability requirements for tankers (MSC.1/Circ.1461)

4. In applying the requirements in **202. 6** (3) of the Rules, "where deemed appropriate by the Society" means that the following ships provided the procedures employed for intact and damage stability verification maintain the same degree of safety, as being loaded in accordance with the approved conditions.

(1) ships which are on a dedicated service, with a limited number of permutations of loading such that all anticipated conditions have been approved in the stability information provided to the master in accordance with the requirements of paragraph **202. 5** of the Rules
(2) ships where stability verification is made remotely by a means approved by the Society
(3) ships which are loaded within an approved range of loading conditions or
(4) ships constructed before 1 July 2016 provided with approved limiting KG/GM curves covering all applicable intact and damage stability requirements.

5. In applying the requirements in **4** "the approved conditions" refer to following:

- Operational guidance provided in part 2 of the Guidelines for verification of damage stability requirements for tankers (MSC.1/Circ.1461).

203. Shipside discharges below the freeboard deck 【See Rule】

1. For the purpose of the requirements in **203. 1** of the Rules, the following requirements (1) and (2) are to be complied with.

(1) The scupper pipes within the superstructure are to be in accordance with the requirements in **Pt 5, Ch 6, 303. 1** of the Guidance.
(2) The inboard open ends of scupper pipes are to be in accordance with the requirements in **Pt 5, Ch 6, 303. 2** (1) (A) of the Guidance.

2. The requirements of **203. 1** of the Rules do not apply to the overboard discharges led through the shell from the superstructure and deckhouse located on or above the second deck on freeboard deck.

3. The scupper pipe in hazardous area is not to pass through the safety area or engine room.

205. Damage assumption 【See Rule】

1. Assumed maximum extent of damage

For the purpose of the standard of damage specified in **205. 1** (2) of the Rules, damage assumed to have sustained within 0.3 L_f from the forward perpendicular of the ship are to be in accordance with the following requirements (1) and (2) :

(1) For bottom damage for 0.3 L_f from the forward perpendicular and forward (according to **205. 1** (2) of the Rules), such damage may not be considered beyond the point of 0.3 L_f from the forward perpendicular.

(2) For cases of bottom damage which is applied to damage sustained in areas after the point of 0.3 L_f from the forward perpendicular (according to **205. 1** (2) of the Rules), such damage is to be considered up to the point corresponding to 0.3 L_f − 5.0 m from the forward perpendicular.

206. Location of cargo tanks 【See Rule】

1. Location of cargo tanks

Notwithstanding the requirements for the location of cargo tanks in **206.** of the Rules, cargo pump room bilges or tank washings may be thrown into any cargo tanks.

2. Suction well installed in cargo tanks

It is desirable that the area of suction well is not larger than the area necessary for the installation of cargo pumps, suction pipes, valves, heating coils, etc. added with the area necessary for sufficient suction, cleaning and maintenance.

207. Flooding assumptions

1. Equalization arrangements 【See Rule】

The "cross-levelling pipes" specified in **207. 6** of the Rules are to comply with the following requirements :

(1) Use of this equalization arrangement is to be accepted only for obtaining the GZ area of 0.0175 m.rad for the righting lever of 0.1 m and the range between the state of equilibrium and 20°. Without the use of this equalization arrangement, the requirements for heel angle and positive stability range are to be satisfied. (See Fig **7.6.4** of the Guidance)

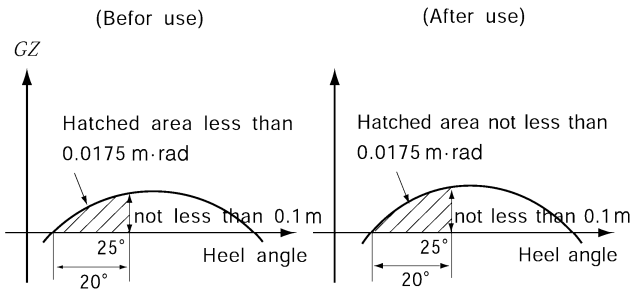

Fig 7.6.4

(2) When righting lever curves before use of this equalization arrangements are determined, the following assumptions are to be made :
  (A) The cargo or consumable liquid in the damaged space has completely spilled out.
  (B) The damaged space is filled with sea water to the water level outside the ship.
  (C) The cross-levelling pipes are closed.

(3) The time required for horizontal adjustment is to be not more than 15 minutes.

(4) The cross sectional area A of piping used for horizontal adjustment is to be as follows :

$$A \geq 7.5\,V/\sqrt{H} \quad (\mathrm{cm}^2)$$

where:

V : Quantity of water expected to enter the flooded space (m^3)

H : Height from the draught line before flooding to the centre line of the pipe (m)

(5) It is not desirable to connect spaces on both sides of the ship with a large diameter duct to ensure the same rate of flooding as this aggravates the heeling moment of the ship in turning motion.

2. Buoyancy of superstructure 【See Rule】

(1) In the case of the side damage where the machinery space is regarded as one-space flooding in **207. 8** of the Rules, damage extent applicable to spaces other than the machinery space is applied to poop. With this reason, therefore, the space within poop surrounding the machinery space and enveloped by watertight bulkheads can not be treated as a reserve buoyancy unless watertight bulkheads are arranged as given in Fig **7.6.5** of the Guidance. However, in case where such treatment is accepted under the special requirements for small ships in accordance with **208. 2** of the Rules as a special relaxation by the Society, the above requirements may not be applied. Where the engine room bulkhead is knuckled, the space between the foremost end and the aftermost end is to be taken as the damaged space of the superstructure as given in Fig **7.6.6** of the Guidance.

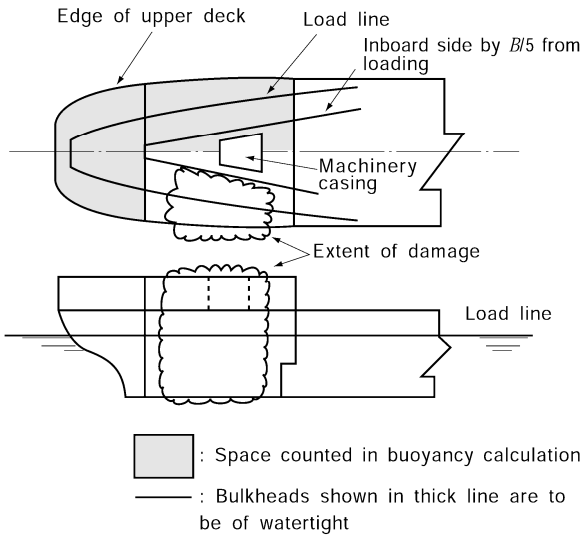

Fig 7.6.5

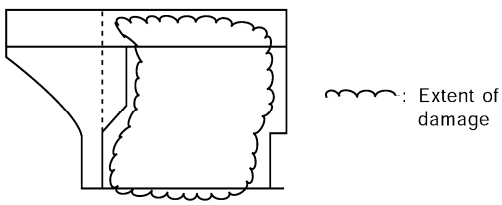

Fig 7.6.6

(2) In **207. 8** (2) of the Rules, the remotely operated sliding watertight doors are to be capable of being controlled from a safe and readily accessible place. Weathertight openings submerge in water under the minimum range of residual stability are to be capable of closing securely in a state of equilibrium.

208. Standard of damage 【See Rule】

1. Assumed extent of damage

(1) In **208. 1** (3) and (5) of the Rules, the treatment of the stairway cases located forward or aft end bulkheads of the machinery space is to be in accordance with Fig **7.6.7** of the Guidance.

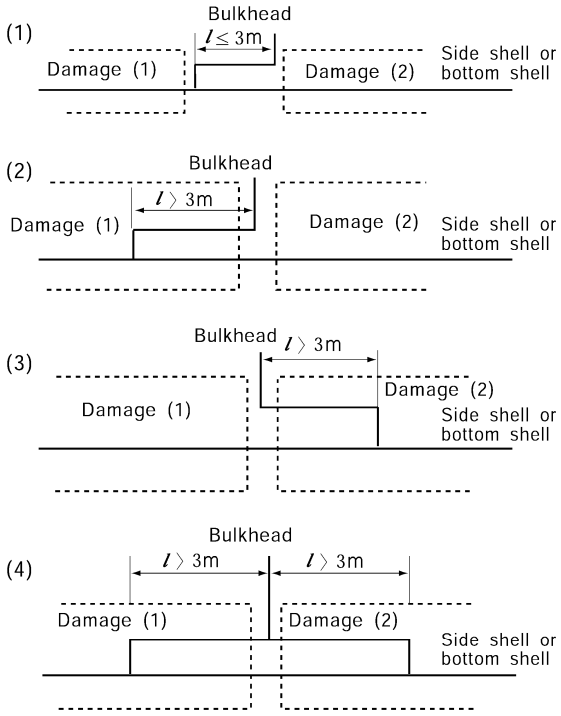

Fig 7.6.7

(2) In **208. 1** (6) of the Rules, the expression "should be considered by the Society" means that the survival requirements specified in 209. of the Rules under a condition of flooding only in the machinery space are satisfied, or the following requirements are satisfied (See Fig **7.6.8** of the Guidance) :

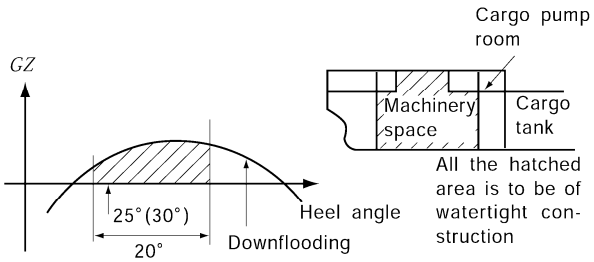

Fig. 7.6.8

(A) The area with positive sign of the righting lever curve within the range from an arbitrary point between the final state of equilibrium after flooding and 25° (or 30° when the deck side line is not submerged) to 20° is to be :
(a) $70\,\mathrm{m} \leq L_f < 125\,\mathrm{m}$: 0.0175 m·rad or more.
(b) $L_f < 70\,\mathrm{m}$: 0.0088 m · rad or more
(B) The position of down flooding is to be in accordance with **209. 3** (1) of the Rules.
(C) The angle of heel is to be in accordance with **209. 2** (2) of the Rules. Where the machinery casing is of the watertight construction, the space in poop surrounding the machinery space may be treated as a reserve buoyancy. When a door is provided, it is to be of the water-tight sliding door remotely operated from the poop deck.

2. Alternative measures

The "special dispensations" in **208. 2** of the Rules are to be in accordance with the following. (See Fig **7.6.9** of the Guidance)

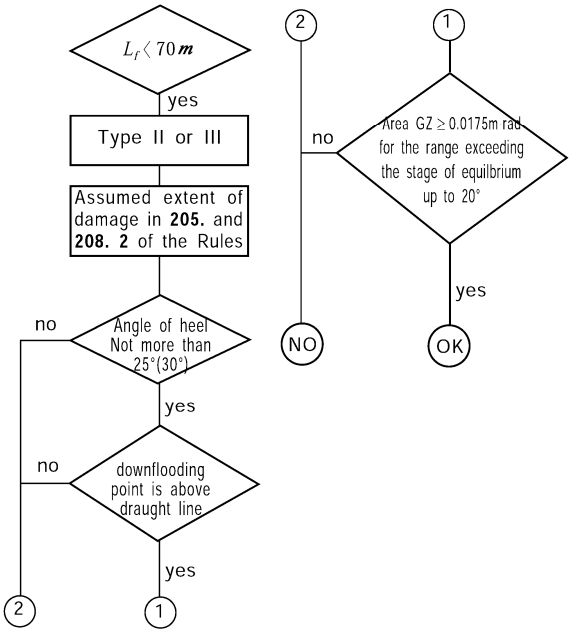

Fig. 7.6.9

(1) No dispensations are to be accepted for Type I ships.
(2) Small ships mean as those whose $L_f < 70$ m.
(3) Except for the case of flooding of machinery space of Type III ships(**208. 1** (6) of the Rules), it is to be in accordance with the following :
  (A) Assumed extent of damage is to be in accordance with **205., 208. 1** (3) and (6) of the Rules.
  (B) Down flooding point and angle of heel are to be in accordance with **209. 2** and **3** of the Rules.
  (C) The area with positive sign of the righting lever curve within the range from an arbitrary point between the final stage of equilibrium after flooding and 25° (or 30° when the deck side line is not submerged) to 20° is to be 0.0175 m.rad or more.
  (D) The maximum value of GZ is not specified.

209. Survival requirements [See Rule]

1. Stability criteria at any stage of flooding

The words "to the satisfaction of the Society" in **209. 2** (3) of the Rules mean as follows :

In ordinary cases, the final stage of flooding is considered most severe, but the most severe condition may be encountered during intermediate stages of flooding involving replacement of sea water in the damaged space. In this connection, stability during such intermediate stages of flooding are to be considered when specifically requested by the Society.

2. Stability criteria at final equilibrium after flooding *(2017)*

(1) In **209. 3** of the Rules, floodable weathertight openings within the minimum stability range (20°) are to be capable of being securely closed at the final stage of equilibrium after flooding. Where safe access thereto is impracticable due to submersion of deck or large angle of heel, such weathertight openings may not be accepted.
(2) The survival requirements at the final stage of equilibrium after flooding are to be in accordance with Fig **7.6.10** of the Guidance.
(3) Other openings capable of being closed weathertight do not include ventilators (complying with ILLC 19(4)) that for operational reasons have to remain open to supply air to the engine room or emergency generator room (if the same is considered buoyant in the stability calculation or protecting openings leading below) for the effective operation of the ship.

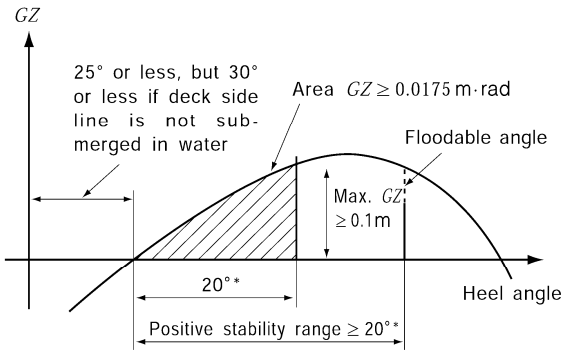

Note * : The initial point of calculation of the stability range at an angle of heel of 20° may be taken arbitrarily at any intermediate point between the angle of heel at the final stage of equilibrium and the maximum angle of heel.

Fig 7.6.10

Section 3 Ship Arrangements

301. Cargo segregation 【See Rule】

1. Segregation of tank containing cargo or residues of cargo

For cargo tanks and slop tanks, neither linear contacts nor point contacts with accommodation spaces, service spaces, machinery space, etc. are to be accepted. Further, no segregation of spaces in contact by means of slanting plates is to be accepted.

2. Segregation of cargoes which react with other cargoes

Where cargoes which react with other cargoes in a hazardous manner are loaded simultaneously, the ship arrangement as given in Fig **7.6.11** of the Guidance is not to be accepted. Only in the requirements for segregation of cargoes which react with each other, the linear contacts and point contacts as given in Fig **7.6.12** of the Guidance may be accepted. Where the cargo pipes are of common pipes, they are not to pass through cargo tanks carrying cargoes which react with each other in a hazardous manner except for the cases where pipe arrangement is provided a tunnel or made as given in Fig **7.6.13** of the Guidance.

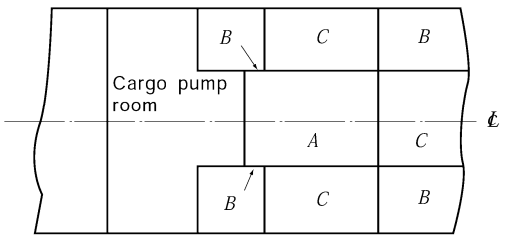

A and *B* react with each other in a hazardous manner. (Arrowhead of *B* indicates facial contacts.)
A and *C*, and *B* and *C* do not react with each other in a hazardous manner.

Fig. 7.6.11

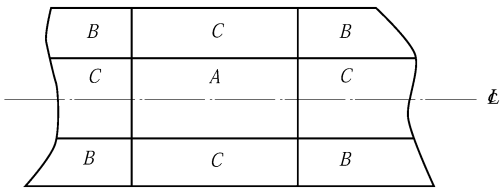

A and *B* react with each other in a hazardous manner.
A and *C*, and *B* and *C* do not react with each other in a hazardous manner.

Fig. 7.6.12

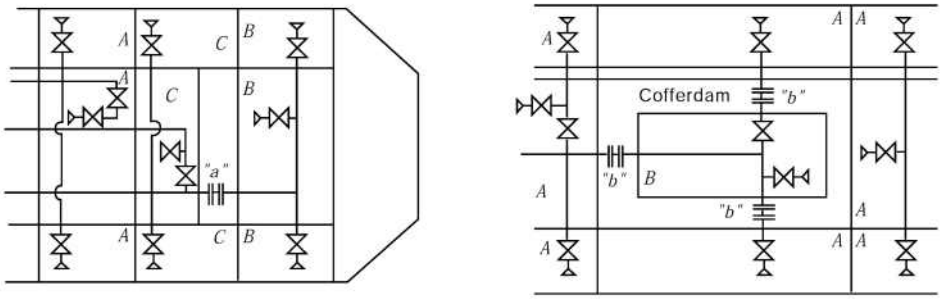

Fig. 7.6.13

Notes :
1. "a" and "b" are to be separated within cofferdam or void spaces in the method specified in **301. 5** of the Rules. No separation in tanks is to be accepted.
2. A and B are cargoes which react with each other in a hazardous manner.
3. A and C, and B and C are safe cargoes which do not react with each other in a hazardous manner. In this case, however, cargo operation of cargo B by connecting the spool pieces of "a" and "b: after discharging cargo A is unacceptable, and therefore provisions of independent cargo pumps may be required for cargo operation on tanks segregated under the method given above.

3. Cargo piping

Cargo piping is not to pass through the spaces specified in **301. 3** of the Rules and, in addition,

spaces such as fuel oil tanks, fresh water tanks and control stations.

302. Accommodation, service and machinery spaces and control stations 【See Rule】

1. Arrangements

When segregated by a gastight deck and well ventilated, such a space is not electrically hazardous space, and in this case, arrangement of accommodation spaces, service spaces or control stations above fuel oil tanks adjacent to cargo tanks in the poop as given in **Fig 7.6.14** of the Guidance may be accepted. Paint lockers, regardless of their use, should not be located above the cargo area.

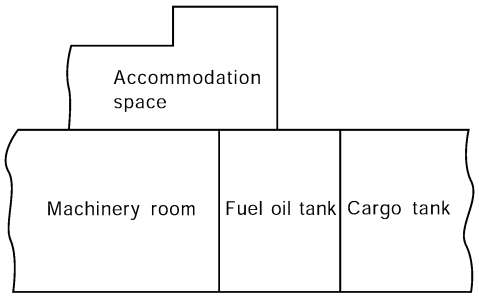

Fig 7.6.14

2. Void space or ballast water tank protecting fuel oil tank as shown in **Fig. 8.2.2** of the **Guidance Pt 8 Ch 1**, need not be considered as "cargo area" defined in **106. 6** of **the Rules** even though they have a cruciform contact with the cargo oil tank or slop tank. The void space protecting fuel oil tank is not considered as a cofferdam. There is no objection to the locations of the void space shown in **Fig. 8.2.2** of the **Guidance Pt 8 Ch 1**, even though they have a cruciform contact with the slop tank. *(2026)*

3. Location of air intakes and openings

The locations of air intakes and openings are to comply with the requirements in **302. 3, 307. 4, 803. 2, 1201. 5** and **1512.** of the Rules.

4. Entrances, air inlets and openings to accommodation, service and machinery spaces and control stations

(1) For exhaust air outlets of the mechanical ventilation system of accommodation, service and machinery spaces and exhaust air outlets specified in **302. 2, 307. 4, 803. 3** and **1512. 1** of the Rules the requirements in this Chapter also apply.

(2) Spaces where doors can be provided are to be restricted to lockers containing cargo gears and safety equipment, cargo control room and decontamination shower room. As given in **Fig 7.6.15** of the Guidance, these spaces are not provided with passageways led to accommodation spaces and service spaces and control station, and the casings, floors and ceilings adjacent to the accommodation spaces are to be insulated to "A-60" standard. However for ships carrying cargoes having a flash point above 60℃, the requirements for boundaries with cargo areas may apply to the provisions of **Pt.8 Ch. 7 103. of the Rule.** *(2020)*

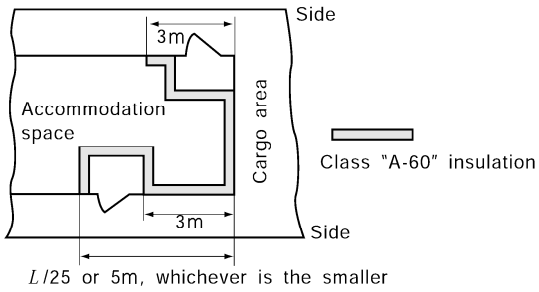

Fig 7.6.15

〈Note〉
Insulation for ships carrying cargoes having a flash point above 60℃. *(2020)*

(3) The gastight wheelhouse doors and windows are to be fitted with packing and dog bolts. These windows, doors and clear view screens are to be hose-tested at a pressure of 0.2MPa. To ensure gastightness of the clear view screen, an additional window fitted with dog bolts or other means of gastight capable of tightening the window pane when the screen is not rotating are to be provided.

(4) For ships carrying dangerous chemicals in bulk, irrespective of the kind of cargo, coaming is to be provided at the forward end of the deckhouse to prevent the ingress of the cargo overflown on the deck into the deckhouse including the accommodation and service spaces and control stations as given in Fig **7.6.16** of the Guidance. The height of coaming is to be 300 mm from the deck, 50 mm above the upper edge of the sheer strake or 50 mm above the upper face of the deck longitudinals, whichever is the greatest.

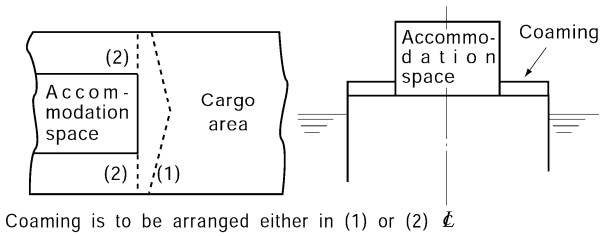

Fig. 7.6.16

(5) In application of **302. 3** of the Rules, access to forecastle spaces containing sources of ignition may be permitted through doors facing the cargo area, provided the doors are located outside hazardous areas as defined in **Ch 5 Sec 10**. *(2024)*

303. Cargo pump rooms 【See Rule】

1. Arrangement of cargo pump rooms

Where cargo pump rooms are normally manned, or in case where cargo pump rooms are specially large, an additional escape trunk is to be provided. In this case, it is desirable that two escape routes led to the weather deck are available.

2. Permanent arrangement for hoisting an injured person

The permanent arrangement for hoisting an injured person from cargo pump room is to be in accordance with the following requirements :

(1) To be capable of being one-man-operated from the weather deck.
(2) To be capable of lifting an injured person up to the place on the weather deck.
(3) To be capable of lifting a weight of not less than 255 kg.

3. Access ladders

The angle of normal access ladders provided in cargo pump room to a horizontal plane is to be not more than 60°.

4. Means for discharging cargoes and bilges

(1) For pumps and valves dealing with cargoes likely to cause corrosions of structural members or contamination with other bilges within the cargo pump room due to leakage of corrosive cargoes, interactive cargoes or water prohibitive cargoes, proper bilge processing systems are to be provided according to degree of hazard. For instance, as the bilge processing systems for pumps dealing with interactive cargoes, provisions of independent bilge processing systems may be considered. In case where interactive cargoes are handled in the same cargo pump room, simultaneous cargo operations are to be avoided whereby the next cargo operation is to be carried out after complete bilge processing for the first cargo.

(2) Slop tanks specified in **303. 5** of the Rules are to comply with the following requirements (A) through (D) :

(A) In case of using the tank both as cargo tank and slop tank, the same requirements applicable to cargo tanks apply.

(B) Where no cargo is carried and only bilges or tank washings are contained, no requirements for ship type (only concerning the cargo tank arrangement) apply, notwithstanding kind of cargoes contained in bilges or tank washings. However, for the minimum requirements other than ship type, the following (a), (b) and (c) are to be complied with :

(a) For ventilation system, electrical installation and instrumentation, the severest of the requirements applicable to the cargoes contained in the slops is to apply.

(b) For tank environmental control and its special requirements, all the requirements for all cargoes contained in the slops are to be satisfied.

(c) For tank type, the requirements for the cargo contained in the slops are to be satisfied.

(C) For tank washings of tanks that carried the dangerous cargoes subjected to **1512.** of the Rules, slop tanks containing bilges of the cargo pump room used for the cargo operation of these cargoes and pipes serving them, the requirements of **1512.** of the Rules apply without exceptions.

(D) In case where two or more cargoes which react in a hazardous manner are carried, the tank washings and bilges containing these cargoes are not to be contained in the same slop tank. Therefore, slop tanks equal in number to that of cargoes which react in a hazardous manner carried at the same time are to be provided. In this case, when cargo tanks are used as slop tanks, these cargo tanks are to be provided with the pumps and pipelines to serve as the slop tanks.

(E) For ships carried the oil subjected to MARPOL 73/78 Annex 1, the capacity of slop tanks is to be complied with MARPOL 73/78 Annex 1.

5. Cargo pump discharge pressure gauges

"Cargo pumps" specified in **303. 6** of the Rules are the cargo pumps, tank cleaning pumps, bilge pumps, etc. used for handling cargoes and liquids containing cargoes in general.

6. Gas tightness of shafting passing through bulkhead or deck

The shaft seals of a type for periodical feeding of grease are not acceptable. Only continuous gas-tight sealing type is acceptable. These shaft seals are to be provided outside the cargo pump room. (See Fig **7.6.17** of the Guidance)

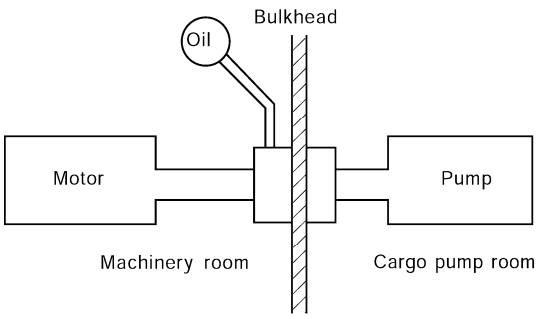

Fig. 7.6.17

304. Access to spaces in the cargo area 【See Rule】

1. General

(1) Spaces having direct openings to hold spaces containing independent tanks are to be to the requirements in **304.** of the Rules irrespective of the definition of the cargo area. Fuel oil tanks which have face contacts, linear contacts or point contacts with cargo tanks and those arranged directly below cargo pump room are not included in the cargo area, but subject to the following requirements.

(A) Fuel oil tank adjacent to cargo tank or in linear or point contact therewith. (See Fig **7.6.18** of the Guidance) Access holes are to be to the requirements in this Paragraph, and access is to be from the cargo area.

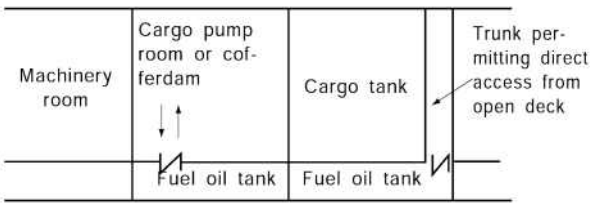

Fig. 7.6.18

(B) Fuel oil tank directly below cargo pump room. (See **Fig 7.6.19** of the Guidance) Access holes are to be to the requirements in this Paragraph, and in consideration of possible cargo leakage, access is to be from the cargo area.

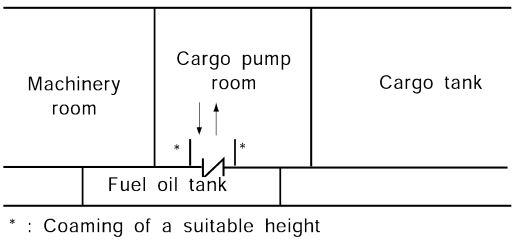

Fig. 7.6.19

(C) For fuel oil tanks given in Fig **7.6.20,** the requirements in this Paragraph do not apply. Access from the cargo area is desirable.

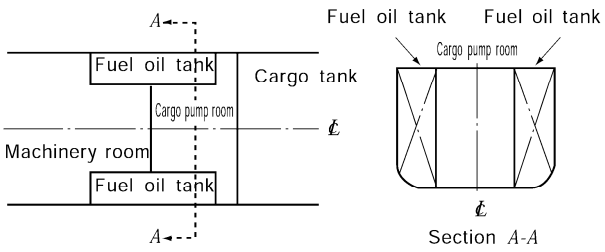

Fig. 7.6.20

(2) For access openings of double bottom, etc., the following requirements are to be complied with : Two access routes are, as a rule, necessary for double bottom or similar other spaces as given in (1) to (3) of Fig **7.6.21** of the Guidance. The arrangement as given in (4) of Fig **7.6.21** of the Guidance is not to be accepted. On condition that easy access is provided and an unconscious injured person can be rescued, only one access route may be accepted for a relatively small space. On duct keel, access openings are to be provided at both ends, and an opening led to weather deck is to be provided at intervals not exceeding 60 m.

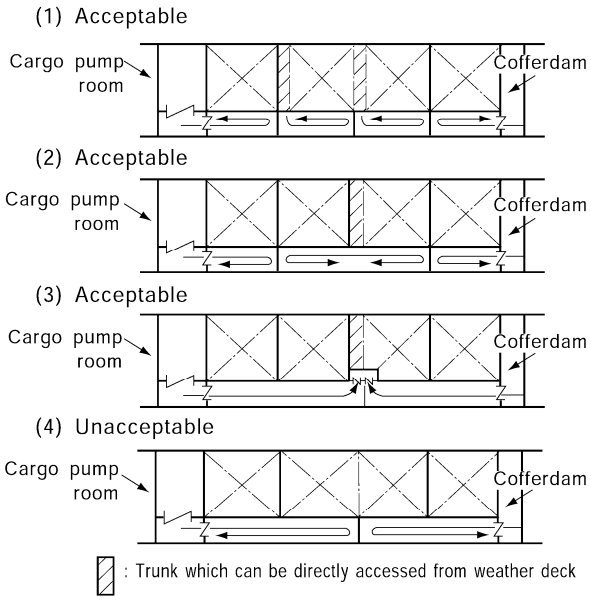

Fig. 7.6.21

(3) Access openings to independent cargo tanks are to be in accordance with the following requirements :
Independent cargo tanks are to be provided with trunks or domes protruding beyond the weather deck as given in Fig **7.6.22** of the Guidance and cargo tank hatches are to be provided on the top of these trunks or domes. No opening of any construction is to be provided on the cargo tank wall below the weather deck.

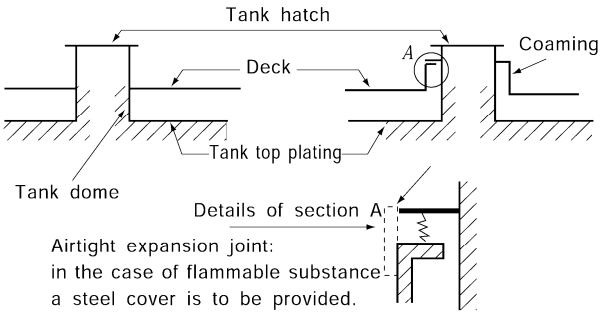

Fig. 7.6.22

2. Minimum clear opening for access through horizontal openings

The minimum opening dimensions are to be 600 mm × 600 mm with rounded corners.

3. Minimum clear opening for access through vertical openings and arrangements of vertical openings

Access openings are to comply with the following requirements:

(1) Opening of 600 mm × 800 mm is to be so oriented that the major axis is taken in the vertical direction. However, where the major axis is difficult to be taken in the vertical direction under the structural reason, horizontal direction may be taken.

(2) At access openings and in the vicinity, no pipes or equipment that interfere with the assurance of access route are to be arranged.

4. Relaxation of opening dimension

Opening dimensions may be as given in **Table 7.6.1** of the Guidance provided that person wearing safety equipment has access to openings and an injured person is easily rescued from the bottom of spaces.

Table 7.6.1 Relaxation of Opening Dimension

Spaces	Minimum dimension (mm)
Cargo Tanks	600×600
Void Spaces, W.B.T	H : 500×500, V : 500×650
F.O.T	H : 450×450, V : 400×500

305. Bilge and ballast arrangements 【See Rule】

1. General

(1) The discharge arrangements of permanent ballast tanks adjacent to cargo tanks may be such that ballast pumps in the machinery space are used as given as Fig **7.6.23** of the Guidance and ballast or bilges are discharged overboard through the eductor in the cargo pump room. In this case, check valve is to be provided between the ballast pump and eductor and spool piece is to be provided on the weather deck within the cargo area.

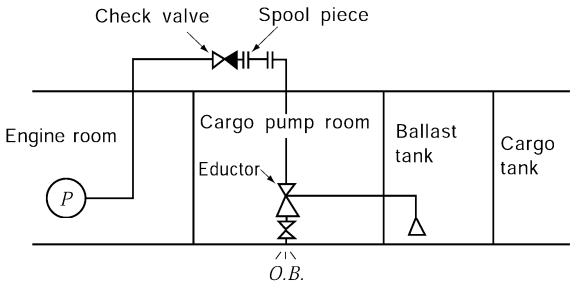

Fig. 7.6.23

(2) The words "ensure filling from tank deck level and check valves are fitted" referred to in **305. 1** of the Rules mean that exclusively used for filling from the weather deck but can not be used for discharging fitted with stop valves on the weather deck or stop valves operable from the weather deck and additionally check valves are provided as given in Fig **7.6.24** of the Guidance. Further, sufficient consideration is to be taken so as not to cause non-compliance with the damage stability requirements due to damage to pipelines or spillage of dangerous ballast or cargo into other compartments.

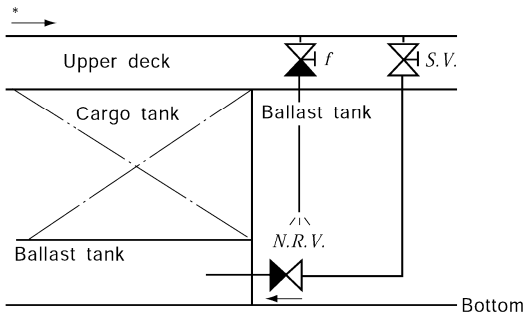

* : A line to ensure filling only from the pump in machinery room
N.R.V. : Non-return valve (Check valve)
S.V. : Stop valve
f : Stop valve + check valve or screw-down check valve

Fig. 7.6.24

(3) Pipelines of ballast tanks adjacent to cargo tanks and not adjacent to cargo tanks are to be basically independent.

2. Filling of ballast in cargo tanks

(1) The case referred to in **305. 2** of the Rules as "the filling line has no permanent connection to cargo tanks or piping and that check valves are fitted" is to be as given in Fig **7.6.25** of the Guidance. In this case, filling is to be limited to that from the open deck, where spool pieces or hoses and stop valves or check valves are required.

(2) When filling is made from the open deck according to the preceding (1), the piping arrangement in cargo tanks is to be such that the filling pipe is extended as close to the bottom as practicable to minimize generation of static electricity.

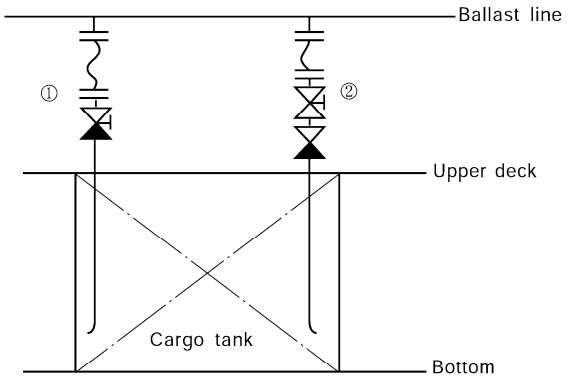

① Hose (spool piece) + screw-down check valve
② Hose (spool piece) + stop valve + check valve

Fig 7.6.25

3. Bilge pumping arrangements for the cargo area

Pipes dealing with cargo or cargo residues passing through void spaces, double bottom and ballast tank spaces are to be treated within the bilge cargo spaces of the compartments even when they are segregated from tanks containing cargo or cargo residues by double bulkheads.

306. Pump and pipeline identification 【See Rule】

"Marking" referred to in **306.** of the Rules is to be made by peel-resisting tapes or paint coat to clearly identify respective pipes.

307. Bow or stern loading and unloading arrangements 【See Rule】

1. General

The bow or stern loading and unloading arrangements are to be given in Fig **7.6.26** of the Guidance, as a standard.

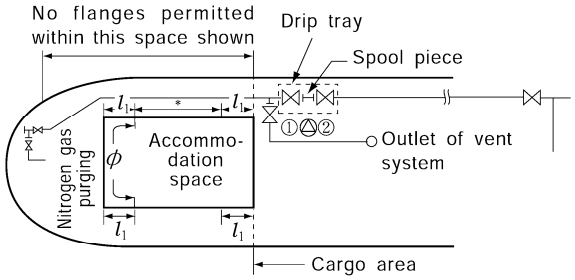

l_1 : L/25 or 3m, whichever is the greater, but need not exceed 5m.
* : Where inlets, air intakes, openings, etc. are permitted to be provided.
ϕ : Where inlets, air intakes, openings, etc. are not permitted to be provided.
Valve ① : The stop valve required in **307. 3** (1) of the Rules.
Valve ② : The stop valve necessary for fitting/removal of the spool piece.
△ : Spray shield is to provided for valves and spool piece. (portable one may be accepted.)

Fig 7.6.26

2. Entrances, air inlets and openings to accommodation, service and machinery spaces and control stations

All openings such as entrances, to accommodation, service and machinery spaces and control stations, air inlets, rope hatches, openings to machinery casing, openings in escape routes, etc. are to be arranged in areas outside the shaded sections given in Fig **7.6.27** of the Guidance. The standard height of superstructure is to be as given in **Table 7.6.2** of the Guidance.

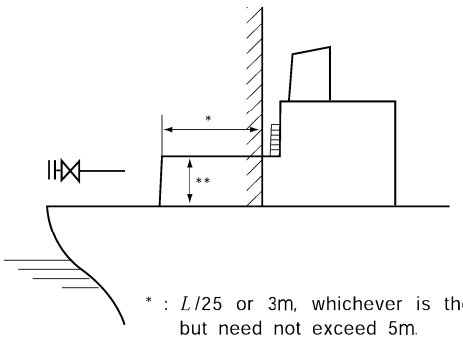

* : L/25 or 3m, whichever is the greater, but need not exceed 5m.
** : To be the standard height of superstructure prescibed in the 1966 International Load Line Convention or more.

Fig 7.6.27

Table 7.6.2 The Standard Height (m)

L (m)	Low Poop	Other poop
Not more than 30	0.90	1.80
75	1.20	1.80
Not less than 125	1.80	2.30

3. Escape route

The "escape route" referred to in **307. 6** of the Rules means the escape route from machinery space.

4. Continuous coamings

The "continuous coamings of suitable height" referred to in **307. 7** of the Rules are the coamings provided on the cargo handling machinery and gear with a height above deck of 150 mm or 50 mm above the upper edge of the sheer strake as given Fig **7.6.28** of the Guidance, whichever is the greater, and are to be arranged in direction of breadth of ships continuously.

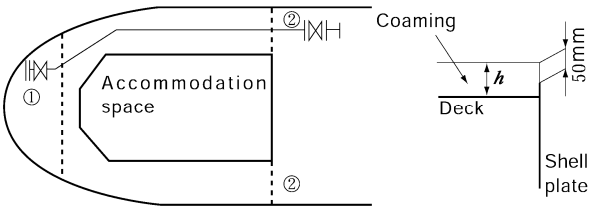

(Note)
Coaming ① is required by this Paragraph, and h is not to be less than 50mm.
Coaming ② is the one required under **302. 3** of the Rules.

Fig 7.6.28

5. Fire-extinguishing arrangements

One each monitor for foam fire-extinguishing system and portable foam applicator unit required in the cargo area are to be provided. The hydrant connected with the portable foam applicator unit is to be arranged within the range effective for discharging the fire-extinguishing medium and the portable foam applicator unit is to be stowed in a space ready for immediate use.

Section 5 Cargo Transfer

501. Piping scantlings

1. Design standard for piping

(1) In **501. 6** (1) of the Rules, the minimum thickness of stainless steel pipes is, in general, to be in accordance with the following requirements : **【See Rule】**
· Cargo pipes passing through ballast tanks : Schedule 40 S
However, the minimum thickness is to satisfy the requirements for thickness of pipes subjected to internal pressure specified in **501. 1** of the Rules.

(2) The protection for cases "Where necessary for mechanical strength" referred to in **501. 6** (2) of the Rules is to be provided as follows : **【See Rule】**
(A) No protection is required for steel pipes used for ordinary applications.
(B) Where aluminium pipes, stainless steel pipes of which thickness is reduced according to their tensile strength, etc. considered vulnerable to impact loads are used, suitable protection is to be provided.
(C) It is desirable that manifolds are to be made of steel.
(D) Pipes passing through bulkheads or decks, those arranged an elevated space above upper deck, those subjected to load of the loading arms at the manifold may be required to have increased thickness.

(3) In "Flanges, valves and other fittings" referred to in **501. 6** (3) of the Rules, the use of stop valves and expansion joints is to be in accordance with the following requirements : **【See Rule】**
(A) To comply with the requirements in **Pt 5, Ch 6** of the Rules (for both Class I and Class II pipes).
(B) Since use of expansion joints is not allowed for the cargo pipes within tanks containing the cargo for which special means for the maintenance of product quality are required, expansion of the pipes is to be absorbed by U-bends, etc.
(C) The materials of valves, seals, etc. are not to be of the ones of which use is prohibited.

(4) In application to **501. 6.** (4) of the Rules, the term "the satisfaction of the Society" means the case where the temperature, the pressure and the size of the flange have values above certain limits and the complete calculation of bolts and flanges is to be carried out. **【See Rule】**

502. Piping fabrication and joining details

1. Joint of cargo piping 【See Rule】

Cargo pipes are to be joined by welded joints except for the flange joints for shut-off valves and expansion joints, spool pieces and equivalent fittings approved in **502. 2** of the Rules and flange joints necessary for painting, lining, assembly, inspection or maintenance. Further, movable anti-acid shields to guard against spray are to be provided at flange welding of cargo pipes above the deck referred to in **1511.** of the Rules.

2. Direct connection of pipes without flanges 【See Rule】

Where Class I pipes or Class II pipes are required under **504.** of the Rules for butt-welded joints in **502. 3** (1) of the Rules, the requirements in **Pt 5, Ch 6** of the Rules are to be complied with. The butt welding procedure for cargo pipes (including liquid cargo and vapour cargo) where use of Class III pipes are permitted is to be the same as in Class II pipes. However, nondestructive testing may not be carried out.

3. Expansion joints 【See Rule】

The "bellows" referred to in **502. 4** (1) of the Rules are not to be used for cargoes having corrosive or polymerizing nature unless consideration is taken for the cargo drains trapped in the corrugated parts of the joints.

503. Flange connections

1. Standards for flanges 【See Rule】

The "standard approved by the Society" referred to in **503. 2** of the Rules means the requirements in **Pt 5, Ch 6, 104.** of the Rules.

504. Tests requirements for piping 【See Rule】

1. Application

The classification standard and test requirements for cargo piping are to be in accordance with **Tables 7.6.3** and **7.6.4** of the Guidance.

Table 7.6.3 ***(2021)***

Ship type	Classification of applicable cargo (See **Table 7.6.4** of the Guidance)	Remark
Type 1	Class I pipes	Irrespective of the design pressure and temperature, the requirements in the left-hand column apply, in principle. For compatibility between cargo and cargo piping materials, separate investigation may be made.
Type 2	Class II pipes	
Type 3	Class III pipes	

Notes :
(1) Cargo piping means the piping to transfer liquid cargo and vapour cargo.
(2) Cargo piping for slop tanks arranged in accordance with the requirements of ship type 3 is to be classified into Class III irrespective of the ship type requirements for cargo contained in slop tanks.
(3) Cargo piping passing through the tanks cargo with higher ship type requirements is to comply with the requirements of the piping specified for such cargo.
(4) Open ended pipes(drains, overflows, vents, etc.) belong to Class Ⅲ.

Table 7.6.4. Test Requirements for Piping

	Materials of pipe	Materials of valves, cocks and pipe fittings	Shop tests for pipe fabrication			Shop tests for valves and pipe fittings	Shipboard tests for piping
			Welding procedure qualification tests	Non-destructive tests	Hydraulic tests		
Class I	Materials complying, as a rule, with the requirements in **Pt 2, Ch 1** of the Rules.	Materials complying, as a rule, with the requirements in **Pt 2, Ch 1** of the Rules. However, materials complying with the requirements of KS or equivalent may be accepted at the discretion of the Society.	To be carried out on piping of Class I or Class II where the following ① to ③ are relevant : ① Joinings between pipes, pipes and valves, and pipes and fittings are made welding for the first time. ② When new welding method is employed. ③ When base material, type of welding materials or type of joints is changed.	① Radiographic testing for the entire length of butt-welded joints between pipes, pipes and valves, and pipes and fittings with nominal diameter exceeding 65A. ② Radiographic testing for the sampled butt-welded joints between pipes, pipes and valves, and pipes and fittings with nominal diameter not more than 65A. ③ In place of radiographic testings, suitable other non-destructive testing may be accepted. ④ Magneticparticle testing or suitable other for fillet weld between pipes, pipes and valves, and pipes and fittings.	① All pipings of Class Ⅰ, Class Ⅱ and Class Ⅲ, are to be subjected to hydraulic tests with fittings attached after fabrication at a test pressure 1.5 times the design pressure. ② The test pressure for hydraulic test for pipes with design temperature exceeding 300°C is to be specified separately. ③ The hydraulic test for welded joints between pipes or pipes and valves(or cocks) of piping arranged onboard the ship is to be specified separately.	Valves(or cocks) and fittings of piping of Class I or Class II are subject to hydraulic test at a pressure of 1.5 times the design pressure.	① All pipings are subject to leak test in their service condition. ② All pipes are to be subjected to preliminary test together with the equipment they serve. ③ All cargo pipings are to be subjected to the hydraulic test at a pressure of 1.5 times the design pressure.

Class II				① Radiographic testing or suitable other testing for buttwelded pipes joints between pipes, pipes and valves(or cocks), and pipes and fittings with nominal diameter exceeding 80A. ② Magnetic particle testing or suitable other testing for fillet weld between pipes, pipes and valves(or cocks), and pipes and fittings		
Class III	Materials complying with the requirements of KS or equivalent	Materials complying with the requirements of KS or equivalent					

505. Piping arrangement

1. Cargo piping under deck 【See Rule】

(1) "the stop valve operable from the weather deck" referred to in **505. 2** of the Rules is to be located in the vicinity of each open end within each tank.

(2) "As an exception ..." specified in **505. 2** of the Rules following is applicable only to the cargo piping arranged in one cargo tank or slop tank adjacent to the cargo pump room as given in the shaded section of **Fig 7.6.29** of the Guidance. In this case, an additional stop valve is to be provided between the bulkhead valve and cargo pump.

(3) The word "leakage" referred to in **505. 2** (1) of the Rules includes the leakage through packing.

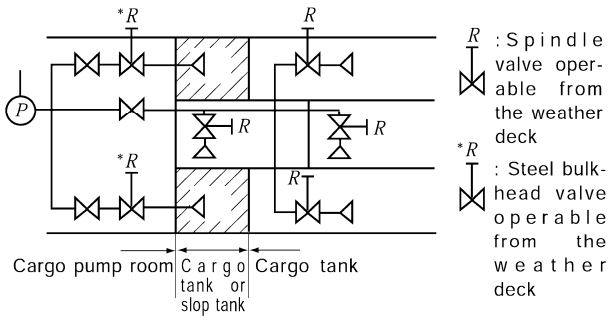

Fig. 7.6.29

506. Cargo transfer control systems 【See Rule】

1. General

(1) The "one stop valve capable of being manually operated on each tank filling and discharge line, located near the tank penetration" referred to in **506. 1** (1) of the Rules, for cargo pipes provided in cargo tanks as given in Fig **7.6.30** of the Guidance may be omitted if there are stop valve specified in **505. 2** of the Rules (stop valve located near the open end and operable from the weather deck) and bulkhead valve provided in the cargo pump room specified in **505. 3** of the Rules.

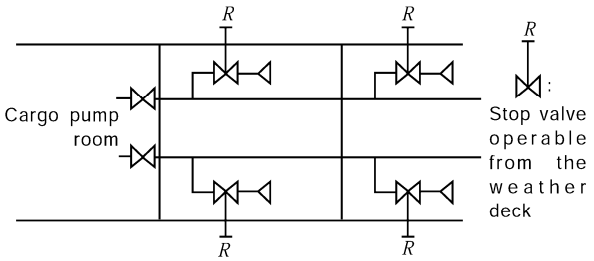

Fig. 7.6.30

(2) Stop valve is not required at the deck penetration of the discharge piping of deep well pump or submerged pump provided independently in each tank, but a stop valve is to be provided near at each penetration of weather deck as given in Fig **7.6.31** of the Guidance for the direct cargo filling line(piping capable of filling cargo without being led through the cargo pump).

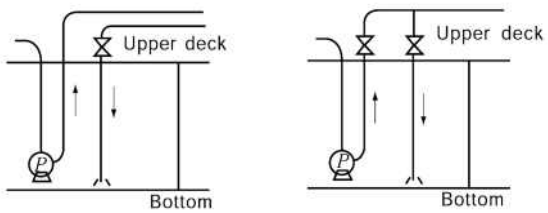

Fig. 7.6.31

(3) When the "direct cargo filling line" specified in the preceding (2) is provided, the open end of such direct cargo filling line for flammable and/or toxic chemicals is to be extended to not more than 10 cm above the tank bottom or sump surface or the filling pipe radius, whichever is the greater. *(2022)*

(4) The "one stop valve" referred to in **506. 1** (2) of the Rules is also required for the hose connection used for the transfer of cargo vapour.

(5) In addition to the preceding (4), a stop valve is required for the hose connection to the shore vapour circulation. When the stop valve is of the portable type for fitting as necessary, stop valves equal to or greater, in number, than the maximum number of tanks scheduled for simultaneous loading of the cargo requiring shore circulation are to be provided at shore for the ship. The restriction to the number of loaded cargo tanks according to the number of these stop valves is to be noted in the Operation Manual of the ship carrying dangerous chemicals in bulk.

(6) It is desirable that the "remote shut-down devices" referred to in **506. 1** (3) of the Rules can be centrally controlled from a place manned at all times during the cargo operation (e.g. cargo control station).

507. Ship's cargo hoses

1. General 【See Rule】

(1) The "hoses" referred to in **507. 1** of the Rules are to comply with the following requirements :
  (A) When come in contact with the cargo, hoses are not to be mechanically damaged or caused extreme degrading in their function.
  (B) The materials of cargo hoses are not to give hazardous effects on the cargo.

(2) In the preceding (1), if cargo hoses are integral with the emergency cargo pump or they are submerged in the tank connected to the pump, the requirements in the preceding (1) are to be considered for both the inside and outside surfaces of hoses.

Section 7 Cargo Temperature Control

701. General 【See Rule】

1. General

The "cargo heating or cooling system" referred to in **701. 1** of the Rules is to comply with the following requirements :

(1) For possible failure of any component or the whole system serving as a source of heating in ships carrying the cargo requiring heating and to which the requirements in this Chapter apply, means are to be provided so as not to disable cargo heating, cargo operation or not to endanger the safety of the ship.

(2) For the refrigerating installations and insulation materials of ships carrying the cargo requiring cooling to which the requirements in this Chapter apply, the requirements in **Ch 5, Sec 4** to **Sec 7** of the Rules and those specified in **Pt 9, Ch 1** of the Rules for Refrigerating Installations apply correspondingly. Particular attention is to be paid to the cargo since propylene oxide for the refrigerating installation of which detailed requirements are specified.

(3) Cargo requiring heating means the dangerous chemicals with a melting point not less than 15°, as a standard, but if deemed necessary by the Society, heating means for cargo may be required according to the service area and operation condition of the ship. In this case, the temperature measuring equipment specified in **701. 5** of the Rules is to be of the fixed type.

(4) The maximum temperature of steam and heating media within the cargo area is to be adjusted to take into account the temperature class of the cargoes.

2. Control valves of cargo temperature control system

The "valves to isolate the system for each tank and to allow manual regulation of flow" referred to in **701. 3** of the Rules means the valves provided between the main vapour line and each tank and are capable of regulating flow rate. This also applies to the case of the refrigerating installations. In **Table 7.6.1** of the Rules where carriage of the water prohibiting cargoes to which the requirements of **1516. 1** of the Rules apply is intended, spool pieces are to be provided in addition to these valves.

3. Maintenance of pressure in cargo temperature control system lines

As the provision for the maintenance of the pressure specified in **701. 4** of the Rules, compressed air may be supplied from the deck general service air line fed from the air reservoirs and air compressors in the machinery space to the heating (cooling) piping.

When it is solely planned to carry the heated (cooled) cargo in all tanks, compressed air may be fed from the compressed air main, but if it is intended to carry the heated (cooled) cargo in part of tanks with the rest of tanks used for the carriage of non-heated (non-cooled) cargo, compressed air is to be supplied from the connection on the tank side of the stop valve of the compressed air branch line as given in **Fig 7.6.32** of the Guidance. In case where carriage of the cargo not requiring heating (or cooling) but requiring to inert the tanks and cofferdams adjacent thereto, no air is to be sealed in the line but inert gas is to be filled in. Consideration is to be given so as not to cause dangerous mutual reaction between the sealing medium and the cargo. Where other means are employed for the maintenance of line pressure, the same requirements apply.

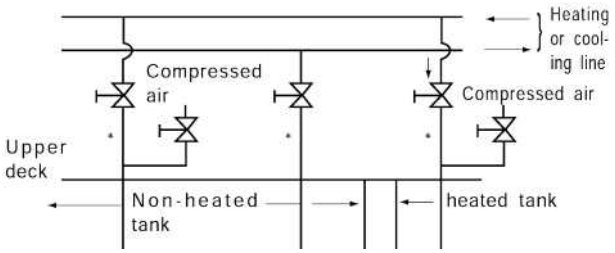

Fig 7.6.32

* For the heating (cooling) lines led to tanks where water prohibiting cargoes are carried, isolating means are to be provided on the tank side the stop valve. *(2021)*

* Where the cargo causing harmful reaction with the thermal medium is carried, the heating (cooling) lines are to be emptied, dried and gases are to be filled before cargo loading.

4. Means for measuring the cargo temperature

"When overheating or overcooling could result in a dangerous condition" referred to in **701. 5** (4) of the Rules means such a case where the adjacent cargo tanks or fuel oil tanks are heated or cooled to the extent that they suffer from thermal effects. In this case, the temperature sensing ends are to be provided at least at two locations on the liquid surface and bottom of the tank.

5. Circuit operated with heating or cooling medium

(1) The cargoes falling under the requirements in **701. 6** of the Rules are to be those to which application of the requirements of either **1512., 1512. 1** or **1512. 3** specified in **Table 7.6.1** of the Rules is required, but they also apply to the cargo with a notation of "*T*" in vapour detection of the Table.

(2) "where the medium is sampled to check for the presence of cargo" referred to in **701. 6** (3) of the Rules is to be of the detection tank fitted with a detection cock as given in Fig **7.6.33** of the Guidance for example. Although provision of a oil observation tank in the machinery space is required for ordinary tankers according to the requirements in **Pt 7, Ch 1, 1002. 9** of the Rules, in the case of carriers carrying dangerous chemicals in bulk, provision in the machinery space is not permitted and such means is to be provided on the weather deck within the cargo area without exception. Means of detection is to be by an effective toxic gas-detecting tube or suitable testing agent. The suitable testing agent is to have been procured from the manufacturer. *(2021)*

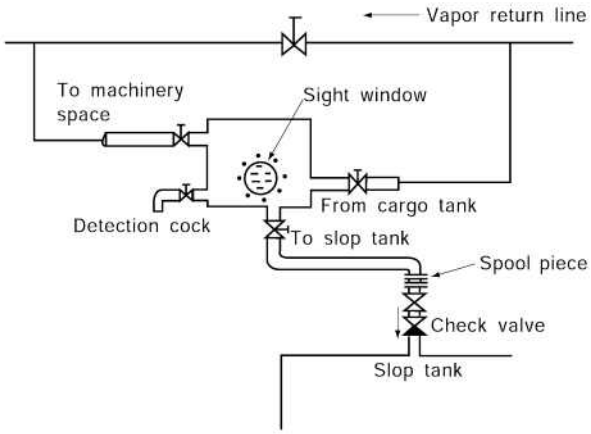

Fig. 7.6.33

Section 8 Cargo Tank Venting and Gas-freeing Arrangements

802. Cargo tank venting

1. Venting systems 【See Rule】

(1) "Tank venting systems are to be arranged to prevent entrance of water into the cargo tanks and at the same time, vent outlet are to direct the vapour discharge upwards in the form of unimpeded jets" referred to in **802. 1** of the Rules mean the outlet as given in Fig **7.6.34** of the Guidance.

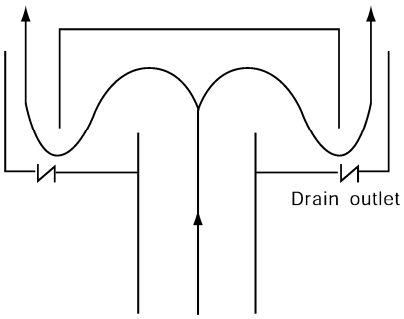

Drain outlet is to be sized so small that no bulk of vapour leaks out.

Fig. 7.6.34

2. Provision for drainage of vent lines *(2019)* 【See Rule】

The "cargo vent lines are to be self-draining back to the cargo tanks" referred to in **802. 2** of the Rules is to be so arranged that drains of the vent lines will flow into cargo tanks by natural gravitation by heels and trims of the ship.

3. Provision to protect liquefied head exceeding design head 【See Rule】

(1) When the "provision made to ensure that the liquid head in any tank does not exceed the design head of the tank" referred to in **802. 3** of the Rules is designed, the following items are to be considered :
- (A) loading and unloading rate
- (B) filling of ballast and discharge rate
- (C) gas evolution
- (D) pressure loss considered resistance coefficient
- (E) pressure loss in ventilation system
- (F) operating pressure(suction/discharge setting pressure) where high velocity venting valves or relief valves are used
- (G) density of equilibrium of the vapour/air mixture
- (H) air supply rate by fixed type ventilation system

(2) Except for the case specified in **1519.** of the Rules, no independency is required among liquid level gauges, high liquid level alarm system and overflow control system. The high level alarm system or overflow control system required in **1519.** of the Rules may be used for the prevention of cargo tank overpressure. When the cargo having a larger specific gravity than the design specific gravity is carried in partial loading, the cargo tank is to be provided with the measuring systems required in 1301. of the Rules, and additionally, high liquid level alarm system capable of being set at arbitrary levels is to be provided for the protection of the cargo tank.

(3) The system fitted with valves and flanges for connecting cargo hoses at hatches on the top of cargo tank for preventing cargo tank overpressure as given in **Fig 7.6.35** of the Guidance may be accepted only when either of the following (A) or (B) is relevant :

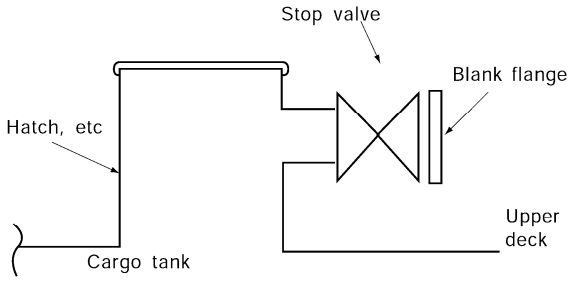

Fig. 7.6.35

(A) Cargo loading is carried out only at ports fully equipped with circulating systems
(B) Where method of cargo transfer to other cargo tanks has been established. In this case, however, cargo loading may be restricted under the requirements for mutual reaction with each other.

In either case of (A) or (B), much difficulty is involved in observing the operational restrictions and hence it is desirable to install the high level alarm or overflow control system specified in **1519.** of the Rules. For tanks carrying the cargo with a flash point of not more than 60°C, provision of the high level alarm system or overflow control system conforming to **Pt 8, Ch 9, 503. 1** of the Rules is required where spill valves are not to be used. (Spill valves are not deemed equivalent.)

4. Design parameter of venting systems 【See Rule】

(1) The size of vent system specified in **802. 4** of the Rules is to be given consideration so that the back pressure produced during the cargo operation at the maximum design loading rate does not exceed either of the following allowable pressures :
(A) Where no special consideration is taken for the strength of tank, the tank design pressure 2.45 m (head)
(B) Where cargo tank is suitably strengthened and the tank has been tested in the presence of the Surveyor of the Society, such tank test head.

(2) The parameters specified in **802. 4** of the Rules are to be considered in sizing of a tank venting system. In a cargo with a boiling point not more than 45°C having a high vapour pressure, the factor exceeding 1.25 may be required in connection to the gas evolution during loading specified in **802. 4** of the Rules.

(3) During the cargo loading/unloading, venting may be carried out through a by-pass line provided for the PV valve or high-speed discharge system. In this case, the height of atmospheric discharge opening of the by-pass line is to comply with the requirements for the height of the discharge outlet of the venting system specified in **803. 3** (1) and **1512. 1** (1) and (2) of the Rules. However, any venting arrangement to discharge the vapour directly by opening the high-speed discharge system is not accepted.

5. High level alarms and overflow control systems specified in the **Ch 6 802. 3** of the Rules are to be type approved by this Society.

803. Types of tank venting systems

1. Open tank venting system 【See Rule】

The term "with due regard to cargo segregation" referred to in **803. 1** of the Rules means the design that restricts the ingress of the cargo of a cargo tank into other cargo tanks through vent lines even at times of heavy weather as given in Fig **7.6.36** of the Guidance. In consideration of possible degrading of product quality due to coming to contact with different dangerous chemicals or their vapours, however, it is desirable that even the open type vent system be of independent design as far as practicable.

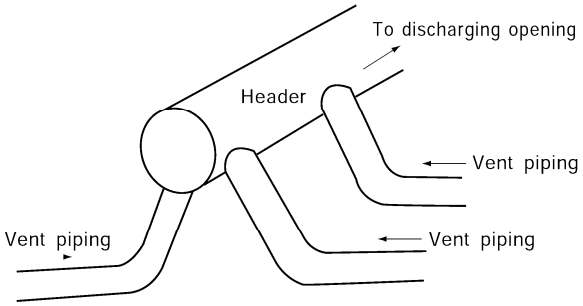

Fig. 7.6.36

2. Controlled tank venting system 【See Rule】

(1) The words "such individual vents on the pressure side only may be combined into a common header or headers, with due regard to cargo segregation" referred to in **803. 2** of the Rules mean as follows :

(A) In case where the controlled venting systems of the cargo tanks carrying the cargoes different from each other or the same cargoes are led to a common pipe header, the pressure relief valves and vacuum regulating valves are to be separate from each other, and any other arrangement than that given in Fig **7.6.37** of the Guidance is unacceptable. This requirement does not apply to tanks where cargoes which react in a dangerous manner are carried.

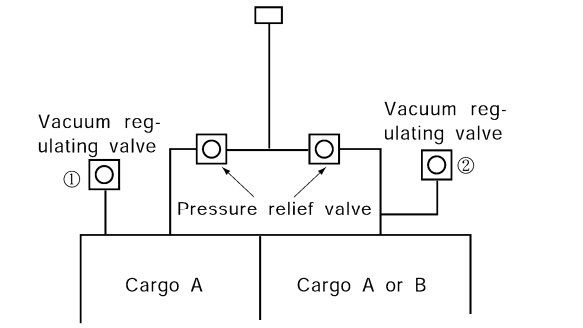

Fig. 7.6.37

(B) When PV valves whose pressure side and vacuum side are led to the common pipe for the vent system of the cargo tank intended to carry cargoes different from each other or the same cargos are used, any arrangement other than the venting system independent for each tank is unacceptable. Accordingly, both the arrangements given as (a) and (b) of **Fig 7.6.38** of the Guidance are unacceptable.

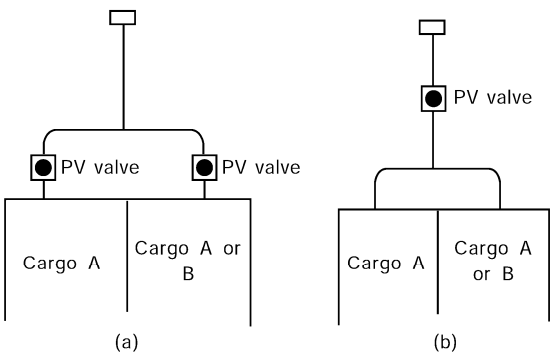

Fig. 7.6.38

(2) The measurement of the height of vent outlet "not less than 6 m above the weather deck" referred to in **803. 4** (1) of the Rules is to be taken as given in Fig **7.6.39** of the Guidance. As for the height of the opening of the vacuum regulating valve, it is to be not less than 760 mm above the freeboard deck for the cargo to which application of **1516. 1** of the Rules is not required. **【See Rule】**

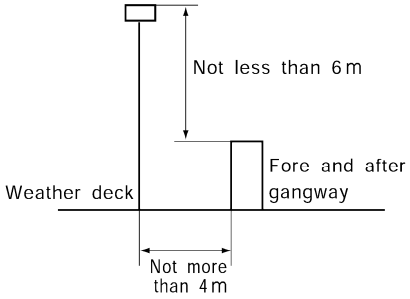

Fig 7.6.39

(3) As the countermeasures against the "freezing of cargo vapour or by icing up in adverse weather conditions" referred to in **803. 7** (3) of the Rules, ships operated in cold zone are to be provided with heating systems, etc. for the prevention thereof. In ships not provided with special heating systems, proper maintenance and inspection work procedures are to have been established. **【See Rule】**

(4) PV valves referred to **803. 2** of the Rules are to be type approved by the Society. The pressure setting, installation, tests and marking of the PV valves are to comply with the requirements of **Pt 8, Ch 9, 501** of the Guidance.

(5) Devices to prevent the passage of flame(including high velocity valves) referred to **803. 5** and **6** are to be type approved by the Society. The design, arrangement, inspection and etc., are to comply with the requirements of **Pt 8, Ch 2, 403. 2** of the Guidance. **【See Rule】**

806. Cargo tank gas-freeing 【See Rule】

1. The method and instruction of cargo tank gas-freeing are to be described on the Cargo Operation Manual in detail.

2. Openings for gas-freeing are to be arranged at places as far as at least the distance specified in **803.** or **1512.** of the Rules from all openings or air intakes of accommodation or service spaces.

Section 9 Environmental Control

901. General 【See Rule】

1. Inerting or padding of cargo tanks

(1) The inert gas supply system for ensuring "sufficient inert gas available on the ship to compensate for normal losses during transportation" referred to in **901. 3** (1) of the Rules is to be as follows : **【See Rule】**

(A) The nitrogen gas generating system that separates nitrogen from the air may be used in combination of the inert gas contained in a pressure vessel as a make-up system at sea.

(B) The required quantity of inert gas to be carried onboard the ship is to be taken into consideration for the ship's structure, equipment and the expected loss that may occur during actual operation of ship, and the related calculation data is to be submitted. In addition, the above is to be reflected in the Cargo operation manual.

(2) The "means to be provided for monitoring" referred to in **901. 3** (4) of the Rules are to be as follows : **【See Rule】**

(A) Continuous monitoring system

(a) Continuous monitoring by fixed oxygen content meter, or

(b) Combined use of continuous pressure measurement of tank atmosphere and portable oxygen content meter.

(B) In the case of the cargo where the "closed type" is required for measurement instruments and inerted method is applied, the measurements by a portable oxygen content meter are to be taken at such measuring line from which no cargo is leaked onto the deck during and after the measurements, and means are provided to lead the exhaust gas to the cargo vent lines. In the case of the cargo where the "restricted type" is required, means are to be provided so that the opening for measurement are automatically closed.

2. Environmental control for double hull spaces, etc.

Ventilation, inerting and gas measurement for double hull and double bottom spaces are to comply with **Pt.8, Ch 2, 405. 1 (3), 407. 2** and **408.** of the Rules. *(2023)*

Section 10 Electrical Installations

1001. General

1. Electrical equipment installed in the flammable atmosphere 【See Rule】

(1) The words "to the satisfaction of the Society" referred to in **1001. 5** of the Rules are to be in accordance with the following (A) or (B) :

(A) Those complying with the requirements in **Pt 6, Ch 1, Sec 9** of the Rules, and having apparatus groups and temperature classes given in column i in table of **Sec 17** of the Rules according to the type of gas.

(B) Explosion-protected electrical equipment in **Pt 6, Ch 1, Sec 9** of the Rules and having type approval by the Society.

(C) Those approved as having no structural hazard to serve as a source of ignition.

1002. Bonding

1. Bonding 【See Rule】

In application to **1002.** of the Rules, the electrical bonding is to conform to the requirements of **Pt 6, Ch 1, 201. 3** of the Rules. In case where the gasketed flange joint are used, the flange bolts only are not considered as an earthing, and the connections and earthing are to be provided with earthing conductors.

Section 11 Fire Protection and Fire Extinction

1102. Cargo pump rooms 【See Rule】

1. Fire-extinguishing system for the ships dedicated to the service of a restricted number of cargoes

The term "an appropriate fire-extinguishing system approved by the Society" referred to in **1102. 2** of the Rules means fixed carbon dioxide fire extinguishing system. The fire extinguishing system for ships carrying only the restricted number of cargoes as defined "No" in column l in table of **Sec 17** of the Rules is left to the discretion of the Society.

1103. Cargo area

1. Type of foam concentrate 【See Rule】

(1) The "regular protein foam" referred to in **1103. 2** of the Rules means the foam without either any agents or anti-frozen agents added to be leveled the liquid point not higher than 0°C.
(2) Where plural fire extinguishing agents including foam are defined effective in column 1 in table of **Sec 17** of the Rules, foam fire extinguishing system is to be provided.

2. Arrangements for providing foam 【See Rule】

For the purpose of the requirements in **1103. 3** of the Rules, the arrangements for providing foam are to be as follows :

(1) For the deck area of cargo tanks, reference is to be made to Fig **7.6.40** of the Guidance.
(2) In supplying foams to inside the cargo tanks, access hatches, etc. may be used.

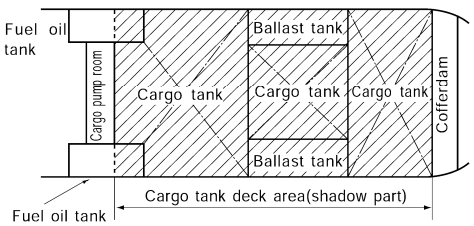

Fig. 7.6.40

3. Rate of supply of foam solution 【See Rule】

For the purpose of the requirements in **1103. 5** (3) of the Rules, the minimum capacity of the monitor for ships less than 4,000tons deadweight is to be 1,000 l per minute and the rate of spray may be set at 10 $l/\mathrm{m}^2/\mathrm{min}$.

4. Specification of monitor and foam applicator 【See Rule】

For the purpose of the requirements in **1103. 7** of the Rules, for the monitor and foam applicator for ships less than 4,000 tons deadweight, the requirements in preceding 3 are to apply correspondingly.

5. Requirements of fire main 【See Rule】

For the purpose of the requirements in **1103. 12** of the Rules, the fire main is to be capable of discharging at least two lines of water jet on deck, accommodation space, control rooms and machinery space during the fire-fighting operation by foam.

6. Alternative provisions installed in ships dedicated to the carriage of a restricted number of cargoes 【See Rule】

The fire extinguishing systems for ships carrying the cargoes defined "No" in column l in table of **Sec 17** of the Rules are left to the discretion of the Society.

7. Portable fire-extinguishing equipment 【See Rule】

As portable fire-extinguishing equipment, two fire extinguishers with a capacity of 9 l to 13.5 l using the fire-extinguishing agents suitable for the type of cargo carried are to be provided at each

manifold. These fire extinguishers are to be stored at suitable places except for the time of cargo operation.

8. Exclusion of sources of ignition 【See Rule】

For the purpose of the requirements in **1103. 15** of the Rules, the windlasses and chain lockers are to be regarded as sources of ignition and are not to be provided in the dangerous compartments given in **1002.** of the Rules. The relevant requirements in **Pt 8, Ch 2** of the Rules are also to be complied with.

1104. Special requirements

1. Special requirements 【See Rule】

(1) For ships dedicated to exclusive carriage of one type of cargo relating to the fire-extinguishing installation given in column I in table of **Sec 17** of the Rules, either one of the alternative fire-extinguishing equipment specified therein may be selected and provided notwithstanding the requirements in column I. Further, the fire-extinguishing arrangements in ships carrying only the cargo defined "NF" in column i and "No" in column l in table of **Sec 17** of the Rules are to be such that any places on deck within the cargo area can be covered by water spray from at least two lines of fire nozzles discharged from separate fire hydrants.

(2) The capacity of fire-extinguishing agent of dry chemical fire extinguishers is to be the greater or more of the following capacities :

(A) The capacity required in **Ch 5, 1104. 6** of the Rules.

(B) 1.5 $\mathrm{kg/m^2}$ of the total deck area of the cargo tanks which are expected to carry simultaneously the cargo for which the fire-extinguishing equipment is required. For other requirements for installations, the requirements in **Ch 5, 1104.** of the Rules apply correspondingly.

(3) The "C-water spray" required in column l in table of **Sec 17** of the Rules as the fire-extinguishing equipment of "ammonium solution of 28 % or less" may be replaced with the water spray from the fixed deck foam system.

Section 12 Mechanical Ventilation in the Cargo Area

1201. Spaces normally entered during cargo handling operations 【See Rule】

1. Ventilation prior to entering the compartment

For the purpose of the requirements in **1201. 2** of the Rules, the ventilating period before the entrance of person in the compartments is to be 15 minutes as standard.

2. Type of ventilation systems

For the purpose of the requirements in **1201. 4** of the Rules, the ventilation ducts in cargo pump room are to be provided at the upper part of cargo pump room, and in addition, to be arranged in compliance with the requirements in **Pt 7, Ch 1, 105.** of the Rules. Further, the suction openings are to be arranged as far apart as practicable from each other, for instance on a diagonal line of cargo pump room, in consideration of the vapour density of the cargo and air intaking efficiency.

3. Arrangement of ventilation intakes

For the purpose of the requirements in **1201. 6** of the Rules, the ventilation intakes are to be so arranged as to minimize the possibility of recycling hazardous vapours.

4. Arrangement of ventilation ducts

For the purpose of the requirements in **1201. 7** of the Rules, in view of the difficulties involved in the maintenance when protection against the approved type of cargo to be carried is required, the location of ventilation ducts on the bulkhead bounding the cargo pump room and machinery room as given in Fig **7.6.41** of the Guidance is not allowed.

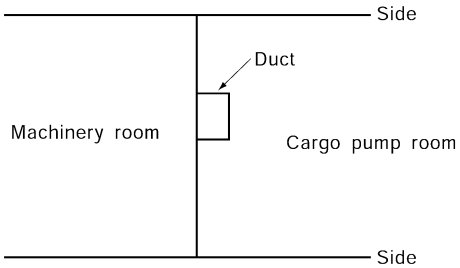

Fig. 7.6.41

5. Requirements of electric motors driving fans

In application of **1201. 8** of the Rules, the ventilation fan "of non-sparking construction" is to be comply with the requirements specified in **Pt 8, Ch 2, 201. 4** of the Rules.

6. Spare parts for fan

For the purpose of the requirements in **1201. 9** of the Rules, one spare impeller is to be provided for each type of fan.

7. Protection screens fitted in the opening of ventilation ducts

For the purpose of the requirements in **1201. 10** of the Rules, the protection screens may be of wire gauze of 13 mm × 13 mm mesh. However, the wire gauze is to have suitable strength against the falling impact of foreign objects.

1202. Pump rooms and other enclosed spaces normally entered 【See Rule】

1. In application to **1202.** of the Rules, the following requirements are to be complied with :

(1) The requirements in **1202.** of the Rules apply irrespective whether the control system of the pumps and valves in the pump room is provided outside the pump room or not.

(2) The pump room and other enclosed spaces normally entered are to have 20 air changes per hour and, in addition, the requirements in **1201.** of the Rules are to be complied with. In enclosed spaces normally entered, the special lockers and storage rooms specified in **1401. 2** of the Rules and suitable clearly marked locker specified in **1402. 5** of the Rules which are readily accessible for persons are to be included. However, for the enclosed small spaces where the

maximum travel distance to the door is 5 m or less, it is difficult to install the fixed ventilation system, portable ventilation system may be permitted.

(3) The ballast pump room where no cargo piping whatever penetrates therethrough or where cargo pipings without having flange joints and valves penetrate therethrough is to be dealt with in accordance with the following requirements :

(A) The exhaust outlet of the mechanical ventilation fans of the ballast pump room may not undergo the restriction to its location specified in **1201. 5** of the Rules.

(B) The exhaust inlet and outlet of the mechanical ventilation fans serving the ballast pump room is to be provided with a protective wire gauge of 13 mm × 13 mm mesh.

(C) For the exhaust ventilation fans of the ballast pump room, spare parts as required for the ventilation fans of cargo pump room are to be provided for each type.

(D) The fire hydrants are to be provided as the fire-extinguishing arrangement of the ballast pump room, but no fixed gas fire-extinguishing system is required.

1203. Spaces not normally entered 【See Rule】

1. Spaces not normally entered

The ventilation system provided in spaces not normally entered is not allowed to be the natural ventilation alone. Where a fan is provided in the permanent duct, eight air changes per hour, and where no permanent duct is provided, sixteen air changes per hour are to be provided.

Section 13 Instrumentation

1301. General 【See Rule】

1. Types of gauging devices

(1) The openings for the restricted device and closed device of the types of gauging devices referred to in **1301. 1** of the Rules are to comply with the following requirements:

(A) Restricted device :

The inside diameter of the opening is to be not more than 200 mm for both sounding pipe and ullage hatch and to be provided with self-closing type pipe head fitting. For cargo tank sounding/ullage measuring, the device is to be of the gas seal valve capable of being fitted with a measuring device of the construction restricting a massive leakage of cargo vapour. Glazed peeping window is to be provided separately as necessary.

(B) Closed device :

The closed construction is to be of all welded construction, as a rule, but flange construction for periodic inspection which is normally not open may be accepted as the closed device.

(2) In types referred to in **1301. 1** (1), (2) and (3) of the Rules, the closed type may serve commonly with open type and restricted type, and the restricted type, with open type respectively. Namely, the degree of safety is the highest in the closed type followed by the restricted type and then open type, thus it descends in the order of description. In the cargo tank where loading of the cargo required to be provided with the closed devices is expected, restricted devices may be provided in addition to closed devices. In more specific terms, in case where carriage is made of the cargo for which the use of closed devices is required, only the closed devices are to be used, but when carriage is made of the cargo in this tank for which the use of restricted devices is required, either of the closed devices and/or restricted devices may be used. However, for tanks where use of either the closed devised or restricted devices is required, open devices are not to be provided from the safety point of view.

(3) Where peeping windows are provided as a means of gauging device, their construction, liquid and gas sealing performance are to be equivalent to that of tank top, and are to be fitted with protective covers of sufficient strength.

(4) The fitting of a gauging device on the bulkhead of tank with a flange is not allowed under any circumstances. Namely, the gauging device is to be housed in a recessed pipe as shown in Fig **7.6.42** of the Guidance.

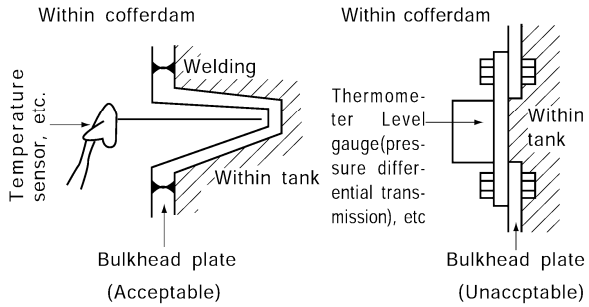

Fig. 7.6.42

(5) The performance and construction of liquid level indicator are to have been approved in accordance with the Guidance for the Approval of Manufacturing Process and Type Approval, Etc.

(6) The tests (pressure, temperature, etc.) and inspection for other gauging devices are to be comply with the following requirements (A) and (B). However, the performance test does not necessarily require a test using the real cargo if as the effect of the device can be verified.

(A) Testing procedure at time of manufacture

Performance tests are to be conducted using the real cargo according to the test plan prepared by the manufacturer. However, in the case of devices which are of the same type previously approved, the performance test using the real cargo may be omitted on approval by the Society. In the case of fixed type device, tests and inspection are to be arranged in accordance with the shipboard test plan approved by the Society.

(B) Reinspection and retesting procedures onboard.

For the gauging devices and equipment fitted onboard the ship, the data specifying the following items (the data are to have been approved by the Society) are to be placed onboard the ship.
(a) Check procedure before use (including the testing procedure)
(b) Check procedure during use (including the testing procedure)
(c) The periodical check procedure established by the manufacturer and service frequency
(d) Service life
(e) Tests and inspection procedures at periodical inspection
(f) Other precautions

1302. Vapour detection 【See Rule】

1. Requirements for some products which are not available with toxic vapour detection

In case where a suitable vapour detection instrument for a specific cargo is not available, approval from the Society is to be obtained. However, it is desirable that fixed type vapour detection instruments are installed as far as such are available. At least against carbon disulfide and chlorsulfonic acid, fixed type vapour detection instruments are to be provided.

Section 14 Personnel Protection

1401. Protective equipment

1. Requirements for work clothes and protective equipment 【See Rule】

Work clothes and protective equipment specified in the requirements in **1401. 1** of the Rules are to be capable of protecting the entire body of the wearer against cargo splashes in all directions, and the number of sets necessary for those working on deck and in cargo pump room are to be provided. Where one type of work clothes or protective equipment is not sufficient for all prospective types of cargo of the ship, necessary number of sets for respective types of cargo is to be provided.

2. Lockers for work clothes and protective equipment 【See Rule】

The protective equipment used for once or more to handle the cargo to which the requirements in **Ch 6** of the Rules apply are, as a rule, to be stored in the lockers provided within the cargo area. One set of these is to be stored in the locker near the cargo pump room at all times. The construction of the special locker for the storage of protective equipment provided in the cargo area is to comply with the requirement in **Pt 3, Ch 17** of the Rules. When this can not be complied with under unavoidable reasons, protective equipment may be stored in the store room or locker having no openings to accommodation space and service space and located outside the cargo area as shown in Fig **7.6.43** of the Guidance. This requirement does not apply to brand new protective equipment, unused equipment, or equipment which has not been used since undergoing a thorough cleaning process.

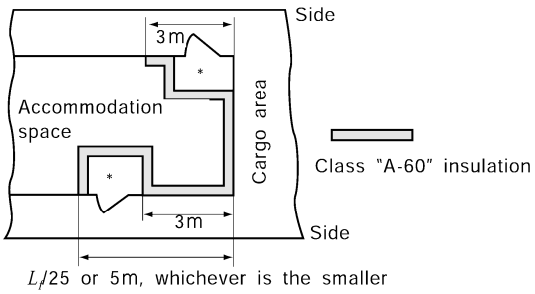

Fig 7.6.43

* : When the storage place of protective equipment is provided within the accommodation space or service space, such is only allowed at areas with openings as specified in **302. 3** of the Rules. In this case, it is desirable to provide showers, etc. within the room. the location of the store room of cargo specimens referred to in **1605. 4** of the Rules is to be dealt with in the same manner as above.

1402. Safety equipment

1. The number of safety equipment is to be determined after carefully studying the arrangement and scheme of shipboard working persons. **【See Rule】**

2. The safety equipment specified in **1402. 2** of the Rules is to comply with the following requirements : **【See Rule】**

(1) The term "perform work for at least 20 min." means a capacity in terms of the free air volume at atmospheric pressure is 800 litres or more.

(2) Work clothes and protective equipment of excellent acid-resisting, alkali-resisting and anti-toxic features against the types of prospective cargo are to be used. No duplicated use of work clothes and protective equipment with those required under **1401. 1** of the Rules, in number, is permitted.

(3) The length of the fire-resisting life line is to be 30 m or more so that it can be used also for signalling between the person who enters the enclosed compartment and the other person outside the compartment.

(4) The explosion-proof light is to be capable of lighting for a period not less than 3 hours.

(5) The suits for toxic cargoes are to be fitted with integral gloves and boots.

3. The air compressor referred to in **1402. 3** (2) of the Rules is to be capable of charging the air bottles placed onboard to their maximum working pressure. **【See Rule】**

4. The additional requirements for the cargo pump room of ships carrying cargo for which no effective vapour detection instruments are provided are to be as given in the following (1) and (2) : **【See Rule】**

(1) The additional air bottles for the work in the cargo pump room of ships carrying toxic cargo without being provided with effective vapour toxicity detection instruments are to be provided in addition to the number of spare air bottles specified in **1402. 3** of the Rules.

(2) The capacity of the equivalent air bottle in replacement with the low pressure air piping as an additional air breathing apparatus is to be not less than 4,800 litres under the atmospheric pressure.

1403. Emergency equipment

In application to **1403. 2** of the Rules, reference is made to the Medical First Aid Guide for use in Accidents Involving Dangerous Goods (MFAG), which provides advice on the treatment of causalities in accordance with the symptoms exhibited as well as equipment and antidotes that may be appropriate for treating the casualty. **【See Rule】**

Section 15 Special Requirements

1502. Ammonium nitrate solution, 93 % or less

1. Temperature of the heat exchanging medium in the tank heating system 【See Rule】

For the requirements in **1502. 4** of the Rules, the temperature alarm is to be of visible and audible alarm. The detecting temperature is to be the mean temperature within the tank, but the heating system is to be so arranged to avoid uneven heating.

2. Fixed installation for ammonia gas injection system 【See Rule】

For the requirements in **1502. 6** of the Rules, where ammonia gas is injected into cargo, the cargo is to be circulated during the injection being made.

3. Type of cargo pump

The sealing system of centrifugal pump is to be of the stuffing box provided with lantern rings as shown in Fig **7.6.44** of the Guidance and the pressurized fresh water is to be injected into the stuffing box from lantern rings.

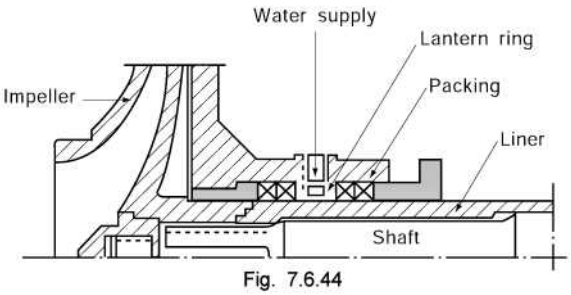

Fig. 7.6.44

1503. Carbon disulphide

1. Opening for emergency sounding 【See Rule】

The opening for emergency sounding is to be provided with sluice valve and cock fitted with automatic closing devices. Further, warning signs banning their use other than in emergency cases are to be fitted.

1505. Hydrogen peroxide solutions 【See Rule】

1. Fixed water spray system

When the rate and estimated size of the spill referred to in **1505. 1** (10) (B) of the Rules are calculated, the piping and hoses are to be considered to have undergone total loss.

1508. Propylene oxide and mixtures of ethylene oxide/propylene oxide with an ethylene oxide content of not more than 30 % by weight 【See Rule】

1. Conditions of carriage

The nitrogen gas produced by the membrane type nitrogen gas generator capable of ensuring a purity of 99 % or more by volume may be used as the nitrogen gas to be sealed.

1510. Sulphur, molten 【See Rule】

1. Cargo temperature control system

For the requirements in **1510. 6** of the Rules, the cargo temperature control system may employ manual temperature control trip, etc. provided that the cargo tanks are equipped with cargo temperature indicators and high/low temperature alarms. In this case, tank temperatures are to be so

monitored and controlled as not to allow them to exceed 155°C at any points of measurement. In case where the heating medium does not exceed 155°C, the requirements here may be reduced to the temperature indicator only. 【See Rule】

2. The double pipes or effective devices are to be provided so that cargo pipe or ventilation pipe is not to be solidified.

1511. Acids

1. Anti-corrosive treatment 【See Rule】

For the purpose of the requirements in **1511. 2** of the Rules, the use of lining or corrosion-resistant materials is to be applied also to the boundary walls of cargo pump room (the bottom and boundaries to a height of 1 m from the bottom). Where the effectiveness of lining or corrosion-resistant materials is not verified, the boundary walls are to be used corrosion-resistant materials. In this case, "lining" is an acid-resistant material that is applied to the tank or piping system in a solid state i.e. not spray on. The requirement for the elasticity of a lining to be not less than the supporting boundary plating is to prevent debonding at the interface between the lining and the lined surface. *(2023)*

2. Means of guard against the danger of cargo being sprayed and leakage 【See Rule】

For the purpose of the requirements in **1511. 4** of the Rules, the shields to guard against the danger of cargo being sprayed and leakage are to be of acid-resistant materials.

3. Segregation of cargo from oil fuel tanks 【See Rule】

For the purpose of the requirements in **1511. 6** of the Rules, in segregating cargo tanks carrying cargoes or cargo residues from oil fuel tanks, none of facial contacts, linear contacts and point contacts are accepted.

4. Apparatus for detection of leakage of cargo 【See Rule】

For the purpose of the requirements in **1511. 7** of the Rules, the apparatus for detection of leakage of cargo is to be of the pH meter and hydrogen detector. These apparatuses may be of portable ones. Further, alternative means such as litmus papers may also be used.

5. Material of bilge pumping and drainage arrangements in cargo pump room 【See Rule】

For the purpose of the requirements in **1511. 8** of the Rules, underneath the cargo pumps and associated flange joints, drain pans are to be provided and the collected drains are to be led to bilge wells through the drain lines. These drain lines are to be formed by corrosion-resistant materials or to be applied with effective coatings. Where the bottom of the cargo pump room and its casing walls to a height of 1m from the bottom are made corrosion-resistant, the requirements may be dispensed with.

1512. Toxic products 【See Rule】

1. The tank venting systems referred to in **1512. 2** of the Rules are to be provided with the stop valve on return line to shore installation.

1513. Cargoes protected by additives

1. In application to **1513. 3** (2) of the Rules, if the additive is oxygen-dependent, the minimum level of oxygen required in the vapour space of the tank for the inhibitor to be effective is to be specified. (**MSC-MEPC.2/Circ.14**) 【See Rule】

2. In application to **1513. 3** (2) and **5** of the Rules, when a product containing an oxygen-dependent inhibitor is carried on a ship for which inerting is required under **SOLAS chapter II-2/4.5.5**, the inert gas system is to be operated as required to maintain the oxygen level in the vapour space of the tank at or above the minimum level of oxygen required under the Rules and as specified in the Certificate of Protection. (**MSC-MEPC.5/Circ.10**) 【See Rule】

1514. Cargoes with a vapour pressure greater than 0.1013 MPa absolute at 37.8°C

1. For the purpose of the requirements in **1514. 4** of the Rules, the tank venting systems are to be provided with the stop valve on return line to shore installation. 【See Rule】

1516. Cargo contamination 【See Rule】

1. No contamination of cargo with alkali or acidic materials

In segregating the cargo tanks carrying cargo to which the requirements in **1516.** of the Rules apply and the cargo tanks carrying cargo of either alkalinity or acidity, none of facial contacts, linear contacts and point contacts are accepted. Further, segregation of cargo pipes and tank venting systems is required.

2. No contamination with water *(2021)*

(1) The "permanent ballast or water tanks unless the tanks are empty or dry" referred to in **1516. 2** (3) of the Rules means that the tank casings, frames, etc. are free from attachments of water droplets or from moistened condition. In the cargo tanks adjacent to permanent ballast or water tanks not maintained in dry condition, no cargo to which the requirements in **1516. 2** of the Rules apply is to be carried. In this case, none of linear contacts and point contacts are accepted. However, the linear contacts and point contacts divided into the cross welding such as Fig **7.6.45** may be accepted.

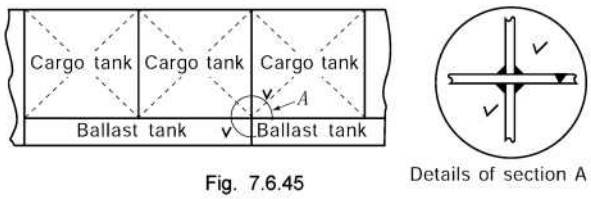

Fig. 7.6.45

(2) Where cargo that reacts dangerously with water is carried in the cargo tank adjacent to ballast tanks, the ballast tank is to be made in dry condition and, at the same time, it is to be ensured that there is no possibility of introducing ballast water thereto by erroneous operation.

(3) Where cargo that reacts dangerously with water is heated, the thermal oil installations or the other indirect heating installations are to be provided.

1517. Increased ventilation requirements 【See Rule】

1. Increased ventilation requirements

The "work areas or other similar spaces" referred to in **1517.** of the Rules are the service spaces, cargo control rooms and other similar spaces but not include cargo manifolds where cargo operation is carried out.

1518. Special cargo pump room requirements 【See Rule】

Under any circumstances, no cargo pump room is arranged directly below open deck. Namely, for tanks carrying the cargo to which the requirements in **1518.** of the Rules apply, either submerged type cargo pump is to be provided therein or cargo pump room is to be provided on open deck.

1519. Overflow control

1. Test of level alarm 【See Rule】

In the test of alarms carried out prior to loading, their functions are to be capable of being tested by actual operation of level gauges. When verification by actual operation is impracticable, suitable means to verify that the alarm circuits in normal condition as shown in Fig **7.6.46** of the Guidance is to be provided.

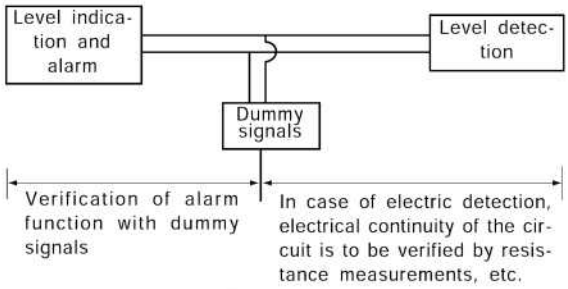

Fig. 7.6.46

2. Independence of high level alarm 【See Rule】

For cargoes required to have high level alarm system and overflow control system in the requirements, the provisions of closed type instruments are required in many cases. For such tanks, the following detecting ends are required :

(A) Level gauging devices (**1301.** of the Rules)
(B) High level alarm (**1519. 6** of the Rules)
(C) Overflow controls (**1519. 7** of the Rules)

The above detecting ends (A), (B) and (C) are to be separate from each other. However, only for pipes to which the detecting ends of (B) and (C) (limit switch, float, electric device, etc.) are fitted, they may serve commonly. The electric, pneumatic or hydraulic circuits required for the detecting ends of (A), (B) and (C) are to be independent so that defect in one circuit may not cause functional disability in other circuits. In case where process units are provided on bridge, etc. for the purpose of visual display, the electric circuits concerned are to be independent at least up to the point of display. Power is to be supplied from distribution box.

3. Installation of high level alarm 【See Rule】

When modular units are provided in the control room or on bridge as high level alarms specified in **1519. 6** of the Rules, level indicators and visible alarms independent from those (A), (B) and (C) given in the preceding 2 are to be provided. Visible and audible alarms are to be provided also at the such locations readily recognizable also from the cargo areas and visible alarms are to be provided at such locations readily recognizable also from shore side. In case where no control room is provided, audible and visible alarms are to be provided in the cargo control room. Except for entering the cargo tanks which have thoroughly been washed clean, the testing device for detecting ends is to be provided outside the tank. Simulation test of electric circuit or self-monitoring circuit may be accepted.

Section 16 Operational Requirements

1601. Maximum allowable quantity of cargo per tank 【See Rule】

The maximum allowable quantity of cargo specified in **1601.** of the Rules is to be determined in consideration of the thermal expansion of the cargo at temperature of 45°C Care is to be taken so as to ensure that the open ends of the venting system in the tank may not submerge in the cargo but in the gaseous phase under any trim condition of the ship at sea. Further, the maximum allowable quantity of cargo in cases where the tank temperature will possibly exceed 45°C being affected by tank heating is to be determined on the basis of such a temperature.

1604. Opening of and entry into cargo tanks 【See Rule】

Covers of the cargo tank specified in **1604.** of the Rules, ullage hole covers and peeping hole covers or tank cleaning hatch covers are not to be opened except for cases where air is intaken in gas free operation, tank washing operation, gauging is taken of the tanks requiring the open devices and restricted devices and during gas detection and when samples are being taken.

1605. Stowage of cargo samples 【See Rule】

When the stowage of cargo samples is made within the cargo area, such stowage compartment is to be only accessible directly from the exposed areas of the ship provided with exhaust type independent mechanical ventilating fan capable of ensuring twenty air changes or more per hour. Where it is difficult to install the permanent ventilation system due to the confined stowage compartment, portable ventilation system may be permitted. However, for the stowage small compartment where the maximum travel distance to the door is 5 m or less, it is difficult to install the fixed ventilation system, portable ventilation system may be permitted.

1606. Cargoes not to be exposed to excessive heat 【See Rule】

In case where the tank carrying the cargo which is not to be exposed to excessive heat is subjected to tank heating or where the tank is adjacent to other tanks (cargo tanks, oil fuel tanks, etc.) which are heated, fixed type thermometers and temperature alarms are to be provided. ⚓

Annex 7A-1 Requirements for Ships not having the International Certificate of Fitness for the Carriage of Liquefied Gases in Bulk [See Rule]

Section 1 General

101. Application

1. The construction, equipment and survey of ships intended to be classified as liquefied gas carriers not having the International Certificate of Fitness for the Carriage of Liquefied Gases in Bulk are to be in compliance with the requirements in this Annex. "Liquefied gas carrier" in this Annex means a ship designed to contain and carry liquid dangerous cargoes in bulk having a vapour pressure (the pressure is expressed in gauge, and the same is to apply hereinafter) of 2 kg/cm^2 or above at a temperature of 38°C. However, the tests prescribed in **104. 2** (10) of Annex may be omitted by carrying out at the time of initial cargo handling of the ship.

2. General items not specified in this Annex, are to conform to the requirements specified in the relevant Parts of the Rules.

3. As for construction and equipment as well as surveys of liquefied gas carriers intended to carry cargoes having different properties from the liquefied petroleum gas, special consideration is to be paid according to the properties of the cargoes.

4. Loading facilities of liquefied gas carriers which are different from those specified in this Annex may be accepted by the Society, provided that those facilities are deemed equivalent to those required in this Annex.

5. The requirements of **Sec 2** in this Annex apply to pressurized liquefied petroleum gas carrier and the requirements of **Sec 3** apply to low temperature liquefied petroleum gas carriers. Ships, however, which are intended to transport liquefied petroleum gas at temperature below -50°C, are to be at the discretion of the Society.

102. Definitions

The definition of each nomenclature in this Annex is as follows :

1. The "pressurized liquefied petroleum gas carriers" mean the ships intended to contain and transport of the liquefied petroleum gas with the vapour pressure of 0.2 MPa or above at 38°C in storage tanks permanently attached to hull structure at atmospheric temperature and under pressurized condition.

2. The "low temperature liquefied petroleum gas carriers" mean the ships intended to contain and transport liquefied petroleum gas with vapour pressure of 0.2 MPa or above at 38°C, in fixed, independent from hulls and self-supporting type tanks thermally insulated from outside, at or near the atmospheric pressure under refrigerated condition.

3. For the pressurized liquefied petroleum gas carriers, tanks include storage tanks and auxiliary tanks. Storage tank is a storage tank specified in preceding **1** and auxiliary tank is a tank to provide forced pressure head to cargo pumps.

For the low temperature liquefied petroleum gas carriers, tanks are the tanks specified in preceding **2** in which liquefied petroleum gas is loaded.

4. Tank hold is a compartment in which storage tanks of preceding **1** and tanks of preceding **2** are installed.

5. Liquid is liquid phase of liquefied petroleum gas.

6. Gas is gaseous phase of liquefied petroleum gas.

7. Dangerous space is the space where inflammable or explosive substances are placed and where those are stored or are liable to escape into. For ships prescribed in this Annex, at least, following compartments and areas are to be considered as dangerous spaces:

(1) Tank.
(2) Compartment adjoining the tank.
(3) Compartment containing cargo handling machinery and equipment, such as cargo pump room, compressor room, etc.
(4) Zone or semi-enclosed space on open deck, within at least 3 m from any tank outlet, gas/vapour outlet, liquid outlet or cargo pipe flange.
  (A) Openings, as specified above, are the following openings ;
    Tank outlet : Manhole, tank fittings
    Gas outlet : Entrances and ventilation openings of spaces specified in (3), (7) and (8) safety valves, shore connection
    Liquid outlet : Shore connection, overboard discharge pipe
  (B) Flange of cargo pipe is as follows ;
    Cargo pipe means liquid and gas pipe except overboard discharge pipe
    Slip-on and screw type are considered as flanged type.
(5) Zone enclosed by the following width, height and length, on the weather deck:
  (A) Full breadth of the ship ;
  (B) 2.4 m in height above the weather deck ;
  (C) Total length obtained by extending 3 m each in both fore and after directions, with length from leading edge of the foremost storage tank to the trailing edge of the rearmost storage tank.
  (D) In the case of small ships where part of the forecastle deck corresponds to the dangerous space under the requirements of preceding (C) and when electrical equipment other than explosion-protected ones are installed between the leading edge of the foremost storage tank and extension of 3 m in fore direction under an inevitable reason, the following requirements are to be complied with:
    (a) A steel gas barrier is to be provided on the forecastle deck.
    (b) The height of the steel gas barrier is to be 2.4 m or more above the upper deck with the full width of the forecastle deck where the steel gas barrier is installed.
    (c) The steel gas barrier is not to be provided with any opening.
    (d) Electrical equipment is to be at least of the totally enclosed water-proof type.
(6) Exposed area within 2.4 m from the outer surface of storage tank.(in case where the tank is covered by insulator or protective enclosure, the distance is to be measured from its external surface.)
(7) Enclosed or semi-enclosed space where cargo piping is installed.
(8) Compartment where cargo hoses are stored.
(9) Enclosed or semi-enclosed space directly above the dangerous spaces prescribed in (2) or (3) above, except space which is partitioned by gastight bulkheads and is suitably ventilated. "suitably ventilated" means the mechanical ventilation separated from those for compartments specified in preceding (2), (3), (7) and (8), and the air charge rate are not limited.
(10) Any enclosed or semi-enclosed space which has a direct opening to any one of dangerous spaces prescribed in (1) to (9) above.
    The following items are not regarded as the direct openings.
  (A) For windows, manholes, etc.,
    (a) Fixed type gastight portholes
    (b) Bolted, gastight or watertight openings which are not necessary to be opened while the ship is at sea.
  (B) For doors,
    (a) In access opening doors of the living quarters on the upper deck where double, metal self-closing doors are provided in addition to weather-tight doors. Provided, however, that sufficient face-to-face contact is obtained for the self-closing type doors by applying packing to the contact face or by other adequate means.
    (b) In case where double, metal self-closing doors are provided in addition to weather-tight doors for deck storeroom, etc., and the space between the double doors is provided with effective mechanical supply ventilation system.
    In case where double, metal self-closing doors are provided in addition to weather-tight doors, and the space between the double doors is provided with effective mechanic\l supply ventilating system which is interlocked with the non-explosion-protected electrical equipment within the compartment.
    The above (b) may a\so apply to the access opening doors specified in (a) above. The

term "semi-enclosed spaces" specified in (4), (7), (9) and (10) above means the spaces separated by decks and bulkheads where the condition of ventilation is significantly different from that of exposed part of ship.

8. Void space in tank holds is an empty space around tanks in tank holds.

9. Secondary barrier is a structure to hold leaked cargo for more than a fixed period so as not to lower the temperature of main hull structures below that specified in the design.

103. Plans and documents to be approved

Where the loading facilities of liquefied petroleum gas are installed on board, at least, following plans and documents are to be approved by this Society.

Pressurized liquefied petroleum gas carriers

1. Plans and documents to be submitted for approval are as follows:

(1) Specifications for manufacture of tanks including details of welding material and welding procedures.
(2) Overall assembly diagrams and details of tanks and pressure vessels including details of seats for attachment of accessories, nozzles, and also of inner fittings.
(3) Accessory layout on tanks and pressure vessels, detailed drawings of accessories including liquid level gauges, quick closing valves, excess flow valves, etc.
(4) Layout and installation diagrams of storage tanks and auxiliary tanks, details of an deck penetrations and its closing appliances, and details of working benches.
(5) Piping diagrams of liquefied petroleum gas and instrument.
(6) Bilge arrangement and ventilation systems in compartments provided with the loading facilities of liquefied petroleum gas.
(7) Arrangement of safety devices.
(8) Arrangement of sensors for gas detectors.
(9) Details of valves for special purpose, cargo handling hoses, expansion joints, filters, etc. for liquefied petroleum gas.
(10) Constructions of cargo pumps, gas compressors and their prime movers.
(11) Drawings showing dangerous spaces.
(12) Arrangement of earth connections for tanks, piping, equipment, etc.
(13) Electric wiring plans and a table of electrical equipment in dangerous spaces. In this case, the table of electrical equipment is to comply with **Pt 6, Ch 1, 102.** of the Guidance.
(14) Other plans and documents which deemed necessary by the Society.

2. Documents to be submitted for reference are as follows:

(1) Specifications for cargo spaces.
(2) Compositions and physical properties of cargoes including a diagram of saturated vapour pressure within the temperature range from −10°C to 45°C.
(3) Strength calculation sheets of tanks and tank supports and calculation sheets of relieving capacity of safety valves including back pressure calculation of vent pipes.
(4) Piping arrangement of liquefied petroleum gas.
(5) Calculation sheets of filling limits for cargo.
(6) Operation manual prescribed in **106.** of this Annex.

Low temperature liquefied petroleum gas carriers

1. Plans and documents to be submitted for approval are as follows:

(1) Plans given in (5), (6), (9) to (14) of those required for pressurized liquefied petroleum gas carriers.
(2) Manufacturing specifications of tanks (including details of welding procedures, test and inspection plan of welds and tanks, properties of insulation materials and their processing manual).
(3) Construction and details of tanks.

(4) Accessory arrangement on tanks including details of fittings inside the tanks, and details of fittings including level gauges and valves for special purpose.
(5) Details of tank foundations, tank securing devices, deck portions through which tanks penetrate, and closing devices.
(6) Layout and attachment details of heat insulating materials.
(7) Details of secondary barriers, where they are provided.
(8) Details of emergency pressure relief devices from void spaces in tank holds, and details of discharging devices for leaked liquid.
(9) Details of pressure adjusting devices, where void spaces in tank holds are filled by inert gases.
(10) Sectional assembly, details of nozzles, fitting arrangement and details of fittings for various pressure vessels.
(11) Kinds and specifications of materials used for liquefied petroleum gas piping system in connection with the design pressures and/or temperatures.
(12) Piping diagram of refrigerant for re-liquefying devices of vapourized gas.
(13) Arrangements of sensors for gas detectors, temperature indicators, pressure gauges, etc.
(14) Construction of principal parts of re-liquefying devices of vapourized gas in accordance with the requirements for refrigerating devices.

2. Documents to be submitted for reference are as follows :

(1) Documents given in (1), (3) to (6) those required for pressurized liquefied petroleum gas carriers.
(2) Composition and physical properties of cargo including a saturated vapour pressure diagram within the necessary temperature range.
(3) Calculation sheets of capacity of liquefying devices of vapourized gas.

104. Tests and Inspections

Various tests and inspections are to be in accordance with the following requirements as well as the requirements in the relevant Chapters.

1. Pressurized liquefied petroleum gas carriers

(1) Hydrostatic tests
Tanks and pressure vessels, pipes, valves and their fittings for cargo, as well as cargo handling hoses are to be hydrostatically tested at the pressures specified below and are to be satisfactory before installation in the ships.
(A) Tanks and pressure vessels : 1.5 times the design pressure.
(B) Pipes, valves and fittings as well as cargo handling hoses : 2 times the design pressure (or the maximum working pressure).
(C) Cargo compressors and pumps : 1.5 times its maximum working pressure for the pressure parts.
(D) Cargo pipings : In case the welding is carried out at site, tests are to be performed after finishing of welding.

(2) Airtight tests
(A) Tanks and pressure vessels, pipings, valves and their fittings for cargo, as well as cargo handling hoses are to be tested for airtightness at the design pressure (or the maximum working pressure) and are to be satisfactory before installation in the ships.
(B) Piping systems for cargo, after installation in ships, are to be tested for airtightness at a pressure of 90 % or more of the set pressures of relief valves for the piping system and are to be satisfactory.
(C) Cargo compressors and pumps are to be tested for airtightness at the maximum working pressure for their pressure parts.
(D) Cargo pipings are to be tested after finishing of welding, where the welding is carried out at site.

(3) Radiographic tests
Welded joints of piping system for cargo are to be radiographically tested in accordance with the instruction of the Surveyor and are to be satisfactory. For weld joints on the cargo piping, 10 % or more of the joints are to be radiographically tested and the joints tested are to be considered for materials, joint figure, welding position, welding control, experience, etc.

(4) Confirmation tests
Safety valves, relief valves, pressure gauges, thermometers, safety devices, gas detectors, remote control devices, etc. are to be examined of their performance before or after being fitted up.

2. Low temperature liquefied petroleum gas carriers

(1) Tests and surveys of secondary barriers
Where secondary barriers are provided, their effectiveness is to be confirmed by suitable methods at the time of construction. It is also desirable to design them so that effectiveness may be checked at periodical surveys after having been placed in service. In case where the effectiveness of the secondary barriers cannot be checked after having been placed in service, their reliability is to be confirmed by suitable methods at the time of construction.

(2) Welding procedure qualification tests
The welding procedures for use in tank welding are to be those which have been accepted by tests for the welding procedure qualification tests in accordance with the requirements in **Pt 2, Ch 2, Sec 4** of the Rules.

(3) Non-destructive inspections of weld joints
(A) All butt-welded joints of tank plates are to be radiographically examined. Where, however, approved by the Society in consideration of liquid temperature, defect detecting ability, etc., a part of the radiographic examination may be substituted by other types of non-destructive inspections. Even in this case, the radiographic examination is to be carried out for over 20 % of the total butt-welded length and near the intersections of weld lines.
(B) Welded joints for cargo piping are to be radiographically examined satisfactorily in accordance with the instruction of the Surveyor.

(4) Hydraulic tests of tanks
(A) At least one tank or more are to subject to the following tests after their fabrication and before applying heat insulations. Water is to be filled up to the top plate of the tank (excluding the dome, which will be excluded hereinafter) and tanks are to subject to pressure by either pneumatic or hydrostatic pressure corresponding to a water head of either 2.45 m above the tank top plate or up to 0.6 m above the top of hatch opening from the tank top plate, whichever is the greater. Confirmation is to be made that there is no leakage and/or no harmful deformation under such pressure. The remaining tanks may be tested by filling water up to 60 % of the tank depth then applying the pneumatic pressure specified above. However, as for at least one tank, the test pressure or equivalent test water head is to be raised to a pressure 1.2 times the set pressure of the safety valve for overpressure.
(B) Where the structure does not permit inspection of the outer surface of tank plate at the hydrostatic pressure test, any other suitable means to compensate the above is to be proposed for the approval by the Society.

(5) Tests of various pressure vessels
Each pressure vessels and its fittings are to be hydrostatically tested and airtight tested by applying the provisions in preceding 1 (1) and (2) and are to be satisfactory.

(6) Heat insulating materials
Where heat insulations are applied on the tanks, model tests are to be carried out in respect of the method of its application, and confirmation is to be made that the insulations will not come off or break under working condition.

(7) Tank fittings
(A) Safety valves for overpressure, vacuum relief valves and tank fittings not connected to piping are, prior to their installation, to be hydrostatically tested at a pressure of 0.2 MPa and airtight tested at a pressure not less than 0.1 MPa, and are to be satisfactory.
(B) Fittings other than those specified in (A) are, prior to their installation, to be hydrostatically and airtight tested satisfactorily in accordance with (8) (A) and (B) below.

(8) Pipes, valves, pipe fittings, etc. for cargo
(A) Pipes, valves and pipe fittings for cargo and cargo hoses are, prior to their installation in the ship, to be hydrostatically tested satisfactorily at a pressure 2 times the maximum working pressure of the piping system or at a pressure of 1.0 MPa, whichever is the greater.
(B) Pipes, valves, pipe fittings for cargo and cargo hoses are, prior to their installation in the ship, to be airtight tested satisfactorily at the maximum working pressures.
(C) Piping system for cargo is, after installed in the ship, to be airtight tested satisfactorily at a pressure 90 % or more of the set pressure of the relief valve for the piping system.

(9) Confirmation tests
The requirements in preceding **1** (4) are also to apply low temperature liquefied petroleum gas carriers.

(10) Operation tests
The low temperature liquefied petroleum gas carriers are to be confirmed that each of tanks and each of the facilities fulfill the respective conditions initially planned, upon completion of the entire building work and under the fully loaded design condition. In addition, cargo handling facilities are to be inspected under operation with actual cargo.

105. Marking

1. In case of pressurized liquefied petroleum gas carriers, the following particulars are to be marked on each storage tank in a place where easily visible after being installed:

Design pressure, maximum working temperature, capacity, hydrostatic test pressure, date of manufacture, manufacturer's name and manufacturing number.

In case of low temperature liquefied petroleum gas carriers, the following particulars are to be marked in the vicinity of tank dome at a place easily visible:

Tank number, capacity, set pressure of safety valve for overpressure, maximum density of cargo, minimum working temperature, date of manufacture, and manufacturer's name.

2. The maximum working pressure is to be marked on cargo hoses.

3. All pipes connected to tanks are to be marked distinctly either for liquid or gas vapour.

106. Operation manual

Shipbuilders are to supply operation manual to the ship owners outlining operations and maintenance of various facilities for cargo handling as well as safety measures.

Section 2 Pressurized Liquefied Petroleum Gas carriers

201. Arrangement and installation of tanks and compartments containing tanks

1. Arrangement of tanks

Tanks are not to be installed forward of the collision bulkhead nor afterward of the after peak bulkhead.

2. Tank spaces on weather decks

When tanks are either on weather decks or partly projecting out of weather decks, the tanks or protruded parts are to satisfy the following requirements:

(1) Not to interfere with the crew's traffic and working.
(2) To be kept sufficiently from living quarters, boats, embarkation places, fire hydrants and machinery or instruments liable to cause explosion of gas.

3. Distance between tanks and hull structure

(1) The distance between tanks and hull structure such as inner edge of side frames (excepting frames specially provided), inner edge of bulkhead members (excepting girders) and top of inner plating of double bottoms is not to be less than 380 mm for maintenance and inspection, unless otherwise approved by the Society.
(2) For ships of 60 m or more in length, the distance between tanks and side plating is not to be less than 610 mm. And, for ships of single bottom construction, the distance between tanks and bottom plating is not to be less than 610 mm.
(3) Where two or more tanks are installed, the distance between tanks is not to be less than 380 mm, unless specially approved by the Society.

4. Location of manholes

Manhole and accessories of tanks are to be provided above weather decks.

5. Tank supports

Tanks are to be supported securely on steel foundations arranged to avoid excessive concentration of load near the support.

6. Compartments for tank installation

Compartments for tank installation are to be watertight and not to contain any possible source for igniting liquefied petroleum gas (i.e. heat or spark sources, electric equipment, etc.). The spaces are not to have any air communication with other compartments containing such ignition sources.

7. Watertightness of weather deck

In case where tanks penetrate through weather decks, their watertightness is to be in compliance with the requirements specified in **Pt 4, Ch 2** of the Rules.

8. Earthing

Each tank is to be electrically earthed effectively.

202. Tanks and pressure vessels

1. Application

Tanks and pressure vessels for cargo (hereinafter referred to as "pressure vessel") are to be of welded construction and are to be in compliance with the requirements for welded pressure vessels Class 1 specified in **Pt 5, Ch 5** of the Rules, except those specified in this Section.

2. Materials

The materials for tanks and pressure vessels are to have good weldability and notch toughness at low temperatures to which they may be exposed. The materials used are subject to the Society's approval in respect of design and fabrication procedure.

3. Minimum thickness of shell and end plates

The thickness of shell and end plates of tanks and pressure vessels is not to be less than 8 mm. However, in cases where tanks and pressure vessels are not used for storing liquid continuously nor exceed 900 mm in diameter, the thickness may be reduced to 6 mm.

4. Manholes

The tank is to be provided with a manhole of not less than 275 mm × 375 mm or of diameter not less than 375 mm on or close to tank top. Where access trunk is fitted up to any tank, the inside diameter of trunk is not to be less than 750 mm.

203. Pipes, valves, pipe fittings, pressure vessel fittings and tank accessories for cargo

1. Materials and workmanship

(1) Valves, flanges, pipe fittings, pressure vessel fittings and tank accessories are to be of construction suitable for liquefied petroleum gas transported, and are to be made of steel or other materials approved by the Society.
(2) Valve seats, packings, gaskets, etc. are to be of material which has suitable properties against the corrosion by the liquid. The materials for gaskets of manholes or flanges are to withstand temperature of 530°C without failure.
(3) Pipes subjected to liquid or gas pressure are to be seamless or electric-resistance welded steel pipes.
(4) The workmanship of piping specified in preceding (3) is to comply with the requirements for Class 1 piping specified in **Pt 5, Ch 6** of the Rules.

2. Maximum working pressure of cargo piping system

(1) The maximum working pressure of piping system is defined as that during ordinary service.

Where additional pressure is applied on the system by pump, compressor, etc., this maximum pressure is to be properly adjusted taking account of such additional pressure.

(2) Where the maximum working pressure of piping system is less than 1.0 MPa, the pipes and pipe fittings are to be so designed as to withstand a pressure not less than 1.0 MPa, except for those of vent lines specified in **Par. 12** below.

3. Pipe joints

(1) Pipe joints are to be butt weld or flanged coupling, and flanges are to be joined to pipes by welding.

(2) Pipe flanges are to be of 2.0MPa or above in nominal pressure stipulated by KS (Korean Industrial Standard) or equivalent thereto, except for those of vent lines specified in 12 below.

(3) Screw joints of KS B 0222, only with the dimensions of PT25 or under, may be used in places where they can be shut off from tanks, liquid pressure vessels and main pipes for cargo transfer, and furthermore where inspection can be made easily.

4. Expansion joints

Where expansion joints are used in piping subject to pressure of tank or pressure vessel, or delivery pressure of pumps or compressors, they are to be bent pipes made of seamless or electric-resistance welded steel pipes, or to be approved corrugated expansion joints or the equivalent.

5. Relief valves in pipe lines

Relief valves are to be fitted up on pipe lines which are filled with liquid and closed, and consequently where an excessive pressure may occur. Escaping gas from relief valves is to be led to a main discharge line of safety valves on storage tanks.

6. Pipe supports

Piping is to be provided with adequate supports to prevent its own weight being exerted on valves and their fittings as well as to prevent its excessive vibration.

7. Bonding and earthing

Each pipe line is to be electrically connected and to be earthed effectively.

8. Tank accessories and valves

(1) Each storage tank is to be provided with shut-off valves for filling and discharging liquid or gas, safety valves, level gauges, thermometer wells and a pressure gauge, all of which are to be installed above the weather deck, and suitable access means are also to be provided for facilitating the operation. Where tanks are installed under the weather deck, these access means are to be placed on a trunk or a dome positioned on the weather deck. All connections to tanks are to be protected against mechanical damage.

(2) Manually operated stop valves for all the connections other than for safety valves and level gauging devices are to be provided as close to tanks as practicable.

(3) For tanks whose content is discharged outward with the level gauge opening exceeding 1.4 mm in diameter, excess flow valves are to be provided.

(4) Thermometer wells are to be terminated in liquid spaces and connections to the tank wall is to be welded or flanged and gastight lids are to be provided.

(5) A pressure gauge is to be fitted up at the highest location of each tank or its vicinity.

(6) Where the inside diameter of the pressure gauge exceeds 1.4 mm, the connecting pipe is to be provided with an excess flow valve.

(7) The excess flow valve is to close automatically at the flow rate of gas or liquid specified by the maker. Piping including fittings and accessories protected by an excess flow valve, is to have a capacity greater than the rated flow of the excess valve. Excess flow valves may be provided with a bypass not exceeding 1 mm in diameter to equalize pressures.

9. Valves and accessories attached to pressure vessels

The requirements in preceding 8 are to be applied, as far as possible, to valves and accessories attached to pressure vessels.

10. Filling and discharge pipes of tanks

(1) Either of the following valves is to be provided for each filling pipe:

(A) One check valve and one excess flow valve.

(B) One duplicate check valve.
(C) Two check valves.

(2) Except pipes to which filling connections, safety valves and liquid level gauges are provided, all liquid or gas connections to tanks are to be provided with automatic excess flow valves or internal-type quick shut-off valves being always closed except during filling or discharging operation. Such valves are to be provided with emergency shut-off devices by remote control with fusible plugs to melt at temperatures below 104°C thereby closing the shut-off valves automatically in case of fire, in addition to general shut-off devices.

(3) Where filling and discharging are to be performed through single connection and a screw-type stop valve and a quick shut-off valve specified in preceding (2) are provided, non-return valves or excess flow valves may be dispensed with.

(4) Excess flow valves, internal-type quick shut-off valves or non-return valves are to be fitted on the interior or exterior walls of tanks. Where, however, these valves are fitted up on the exterior walls of tanks, care is to be taken so that any undue strain may not cause breakage between the tanks and the valves.

11. Safety valves

(1) Two or more safety valves are to be fitted on each tank, and are to be set to blow-off steam automatically at a pressure not exceeding the design pressure of each tank.
Safety valves are to be among the following and other types of safety valves are to be approved by the Society whenever they are used.

(A) High lift type
The valve lift is to be 1/15 and above, below 1/7 the inside diameter of valve seat. The required areas of steam passages at the chest inlet and outlet are not to be less than the same and 2 times the required valve seat area respectively.

(B) Full bore type
The valve seat is not to be less than 1.15 times the area at the throat.
The area of steam passage at the valve seat is not to be less than 1.05 times the area at the throat, when the valve is open. And the minimum steam passage area at the outlet is not to be less than 2 times the area at the valve seat when the valve is open.

(2) The total capacity of safety valves on each tank is to be sufficient to relieve the volume obtained from the following formula at a pressure not exceeding 1.2 times the approved working pressure. However, for tanks lagged with insulating material, the required quantity of discharge of safety valves may be reduced within the range down to $W_r/2$ depending on the degree of heat insulation effectiveness, where approved by the Society.

$$W_r = 1.56 \times \frac{A^{0.82}}{L_h} 10^5$$

where :

W_r : Required discharge quantity$(\mathrm{kg/h})$

A : The following value depending on the shape and dimensions of each tank:

$D_t \times (U + 0.3\,D_t)$-------for tanks of cylindrical form having dished or semi-elliptical heads.

$D_t \times U$ ---------- for tanks of cylindrical form having hemispherical heads.

D_t^2 ---------- for spherical tanks.

D_t : Outside diameter of tanks(m)

U : Overall external length of tanks(m)

L_h : Latent heat for vaporization of cargo at 1.2 times the approved working pressure of tanks$(\mathrm{kcal/kg})$

The discharge quantity of safety valves is following formula.

$$W = KCA(10P+1)\sqrt{\frac{M}{ZT}}$$

where :

W : Discharge quantity(kg/h)

A : πDL (cm^2) for high lift type

$\frac{\pi}{4}D_t^2$ (cm^2) for full bore type

D : Diameter of disc seat hole (cm)

L : Valve lift (cm)

D_t : Diameter of discharge part (cm).

P : Pressure 1.2 times the limit pressure of tanks(MPa)

M : Atomic weight of fluid

T : Absolute temperature of fluid at P (K)

Z : Compression coefficient of fluid gas at P and T (in case of uncertainty : 1)

K : 0.65

$$C = 387\sqrt{k\left(\frac{2}{k+1}\right)^{\frac{k+1}{k-1}}}$$

k : Specific heat ratio of fluid at P and T (It may be value at normal condition)

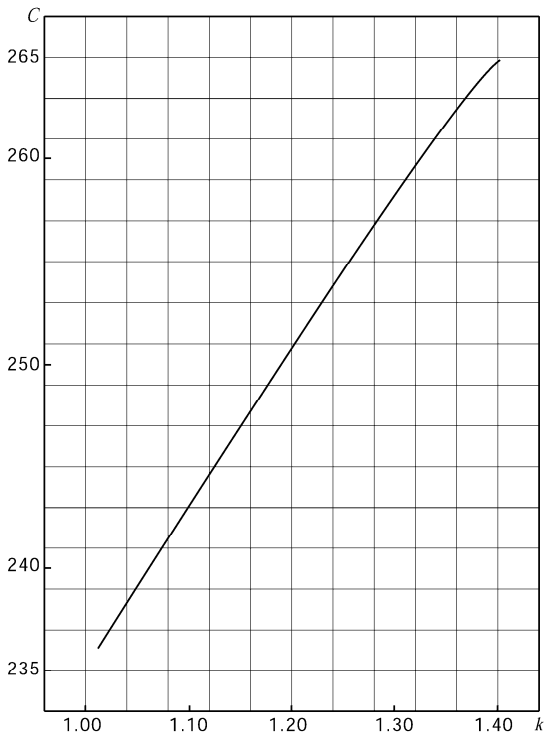

Fig. 1 Relationship between C and k

(3) Safety valves are to be attached to tanks near the highest part of vapour space so as to be able to discharge vapour gas during operation. No shut-off valve is to be fitted between the tanks and the safety valves, except where a set of interlocking type shut-off valves is so arranged that when one of them is closed the others are automatically opened. In this case, total capacity of two or more safety valves opened are at all times to satisfy the requirements in preceding (2).

(4) One or more safety valves are to be fitted on each pressure vessel for liquid. The capacity and

attachment of safety valves are generally to be in accordance with the requirements of preceding (1), (2) and (3) respectively.

12. Vent pipes for safety valves and relief valves

(1) Discharge from safety valves and relief valves is to be led to vent pipes.
(2) Stop valves are not to be fitted to vent pipes.
(3) Vent pipes are to be so designed as to prevent mechanical injury, intrusion of rain or snow and accumulation of drain.
(4) Vent pipes of safety valves on storage tanks are to be capable of discharging a quantity given in **Table 1** of this Annex according to the number of tanks connected to the vent pipe without interfering effective discharge from safety valves by excessive back pressure.

Table 1. Total Valve Discharge

Number of tanks	1 and 2	3	4	5	6 and more
Total valve discharge (%)	100	90	80	70	60

(5) Openings of vent pipes are to be located at a position of 4.5 m or more above the top of tank. Where a deckhouse is situated within horizontal distance of 15 m from the opening, openings are also to be located at a place 3 m higher above the top of deckhouse. At opening of each vent pipe, an effective frame arrester is to be provided.

13. Level gauges

(1) Level gauges of storage tanks are to be in compliance with the following requirements:
(A) Level gauges are to be capable of indicating the highest level of liquid which will be loaded in the range from −7°C to 45°C.
(B) Level gauges may be of any of the following types:
Rotary tube type, slip tube type, fixed tube type, magnet type, automatic float type or similar types having equivalent effectiveness.
(C) Level gauges of float type or magnet type are to be used in conjunction with tube type level gauges.
(D) Where a level gauge is connected to a lead pipe fitted on the exterior of a tank, an automatic shut-off valve in case of failure of the lead pipe is to be fitted as close to the tank as practicable. Where, however, the lead pipe is of sufficiently robust construction, the automatic shut-off valve may be omitted.
(E) A flat type sight glass may be equipped on an automatic float tape reading level gauge. In this case, the glass is to satisfy the requirements specified in (4) below and to be protected effectively by a metallic cover.
(2) Level gauges of intermediate tanks are to be in compliance with the requirements in preceding (1) (B) to (E). But, in case where a self-closing valve or an excess flow valve is equipped in conjunction with the manual stop valve at the connected part of the tank, flat glass type level gauges may be used.
(3) Flat glass type level gauges of pressure vessels are to be in compliance with the requirements in (2) above.
(4) The flat type sight glasses used in level gauges are to be made of heat treated high strength materials and the thickness is not to be less than 12.7 mm.
(5) Round type glass level gauges are not to be used in any case.

204. Cargo handling facilities

1. Application

The requirements in **204.** apply to cargo handling facilities with compressors and liquid pumps or compressors only. Where any other type of facilities than those mentioned above is intended to be provided, full particulars of the installation are to be submitted to be the Society for approval.

2. Location of cargo handling facilities

Cargo handling facilities are not to be located on the weather deck except in compartments in which piping and/or compressors are installed.

3. Cargo hoses

Cargo hoses are to be of suitable material to resist against chemical action of liquid and to be designed for a bursting pressure not less than 5 times the maximum working pressure to which they may be subjected.

4. Connection to shore pipe

(1) In the vicinity of connections between the shore pipes for cargo handling (for both liquid and gas) and the loading headers of ships, shut-off valves are to be provided, each of which can shut off each connection from shore pipes. Adequate shut-off valves are to be fitted on the connections so as to be able to release pressures in the pipes connected to the shore.
(2) The connections with shore pipes are to be arranged so that they may be electrically connected to each other.

5. Pumps and compressors

(1) Pumps and compressors are to be capable of transporting liquefied petroleum gas effectively and are to be so constructed as to minimize gas leakage as far as practicable and free from sparking.
(2) Pumps and compressors are not to be used for purposes other than cargo handling of liquefied petroleum gas.
(3) Where pumps or compressors are driven by engines located in an adjacent compartment, gastight glands are to be provided at portions where driving shafts pass through the bulkhead and alignment of shaft center is to be easily adjusted.
(4) Relief valves or other overpressure protection devices are to be provided on the delivery side of pumps or compressors, except where overpressure is not anticipated. Discharged liquid from the relief valve provided on a pump is to be led to the suction of the pump and the discharge from that provided on a compressor is to be led to the discharge pipe of safety valves on storage tanks, respectively.
(5) Pressure gauges are to be fitted on the delivery side of the pumps and compressors.
(6) Compressors are to be arranged so that no liquid may be sucked in. For this purpose, where an auxiliary tank is provided, suitable means are to be provided to stop the compressors automatically when the liquid level in the intermediate tank reaches the predetermined level.

6. Installation of pumps and compressors

Pumps and compressors are to be installed on the weather deck or in the compartments isolated from adjacent compartments by gastight bulkheads.

205. Ventilation, drainage, etc.

1. Ventilation system

(1) An independent mechanical ventilation system of exhaust type capable of changing the air at a rate of 20 times or more the compartment volume per hour is to be installed in each compartment in which pumps and/or compressors are installed and isolated from adjacent compartment by gastight bulkheads.
(2) An independent mechanical ventilation of supply type having the capacity specified in preceding (1) is to be provided in each compartment in which electric motors or electrical equipment are installed and petroleum gas is liable to intrude.
(3) An effective ventilation system is to be provided for tank holds.
(4) Outlet ends of exhaust pipes of compartments to the atmosphere which come under the provisions in preceding (1) and (2) are to be situated at a distance of 3 m or more from the entrances of companions, deckhouses or superstructures, except where compartments communicated to these entrances are safe spaces from danger of gas explosion.

2. Ventilation system of engine rooms and other compartments containing ignition sources

(1) The ventilation system of engine rooms and other compartments with possible ignition sources in them is to be of air supply type. Openings of air inlet and outlet are to be placed as high as

possible from tank top and possibly apart from ventilation openings of tanks, tank holds and compartments in which pumps and/or compressors are installed, and/or outlet ends of vent pipes from the safety valves.

(2) The ventilation openings of compartments, where the internal combustion engines, boilers or non-explosion-proof type electric equipment are installed, are to be so arranged as to prevent accidental introduction of gas through ventilation openings into the compartments, particularly in the event of failure of cargo handling equipment.

3. Bilge system

(1) The bilge system for the tank holds, pump rooms and compressor rooms for liquefied petroleum gas is to be independent from those of the other compartments.

(2) Not less than 2 sets of power pumps are to be provided in the compartments or on the deck for the purpose of drainage of the tank holds and the pump and/or compressor rooms. The capacity of each pump (Q) is not to be less than following formula. For ships less than 50 m in length, however, 2 sets of manual pumps may be substituted for one power pump.

$$Q = 0.575\, d^2 \ (\mathrm{m^3/h})$$

d : Inside diameter of the main bilge suction specified in preceding (4) (cm).

(3) Where ejectors or eductors are used instead of power pumps, their details are to be submitted to the Society for approval.

(4) The inside diameter of the main bilge suction pipe is to be as specified in **Pt 5, Ch 6, 404. 1** of the Rules.

(5) One of the power pumps specified in preceding (2) may be substituted by a suitable independent power pump in the engine room connected to an emergency suction pipe, which is provided in the tank and the inside diameter of which is not to be less than that of the main bilge suction pipe specified in preceding (4). In this case, the suction pipe is to be of independent bilge suction and a shut-off valve and a blank flange are to be provided in the engine room at the place where the pipe passes through the watertight bulkhead with a notice "For emergency use only" posted near the valve.

4. Cooling devices

Suitable cooling devices are to be provided on storage tanks to keep the liquid temperature in the tanks always below 45°C due to the rise of ambient temperature.

5. Prevention of discharging fire particle through exhaust pipe

Provisions are to be made to prevent discharging fire particles through exhaust pipes of boilers, internal combustion engines or cooking appliances.

6. Installation of equipment containing ignition sources

Any equipment containing ignition sources is not to be installed in the dangerous spaces specified in **102.** (7) of this Annex.

7. Gas detectors

An appropriate number of gas detector probes are to be arranged in tank holds, and a device which automatically detects gas concentration in the tank holds is to be installed.

206. Electrical installations

1. Application

Electrical installations are to be in compliance with the requirements in **206.** as well as the requirements in **Pt 6, Ch 1** of the Rules.

2. Power distribution system

The system of power distribution is to be one of the following types;

(1) Direct current with two insulated wires
(2) Single-phase two insulated wires
(3) Three-phase three insulated wires.

Earth indicating lamps or their alternative means and capacitors used for radio noise suppression may be earthed.

3. Switchboard, section board and power distribution board

Every outgoing circuit from switchboards, section boards or distribution boards is to be provided with a multi-pole circuit breaker or a multi-pole linked switch arranged to interrupt the circuit on each pole simultaneously.

4. Wiring in dangerous spaces

No cable is to be installed in the dangerous spaces specified in **102.** (7) of this Annex. Where it is inevitable to install cables in such spaces, the cables are to comply with the following requirements:

(1) Cables are of the type listed below.
Where corrosion may be anticipated, impervious sheath or equivalent protection is to be applied over steel armour for corrosion protection;
(A) Lead sheath armoured
(B) Impervious sheath armoured
(C) Mineral insulated metallic sheathed

(2) Cables installed is spaces which are always exposed to liquid or vapour of cargo are to be of a type which is not liable to be corroded by liquid or gas, nor to be damaged at the temperature and pressure encountered in any working condition.

(3) Cables are to be installed in the vicinity of the center line of the hull as far as practicable.

(4) Cables are to be installed sufficiently separated from decks, bulkheads, tanks and various pipes.

(5) Where cables pass through bulkheads which constitute the partitions between the dangerous space and the safety spaces or through decks, the sections are to be gastight.

(6) Cables installed in regular corridors or decks are to be properly protected from mechanical damages. Cables and their supports are to be attached so as to withstand expansion, contraction and other actions of the hull structure.

(7) Wiring between the electrical equipment in dangerous spaces and the switches or control devices thereof in safety zones are to have sealing boxes installed on the side of switches or control devices so as to maintain gastightness.

(8) Wiring and cables of intrinsically safe type circuit are to be of exclusive use, and they are to be installed separately from cables for general circuits.

5. Electrical installations in dangerous spaces

(1) No electrical installation is to be provided in the dangerous spaces specified in **102.** (7) of this Annex. Where it is inevitable to provide electrical installations in such spaces, they are to comply with the following requirements:

(A) In all dangerous spaces
Intrinsically safe type electrical equipment may be installed.

(B) In the dangerous spaces specified in **102.** (7) (A) of this Annex
Submerged type electric motors installed in tanks are to be of an explosion-proof type approved by the Society.

(C) In the dangerous spaces specified in **102.** (7) (B), (C) or (H) of this Annex
(a) Electrical sounding devices with enclosed covering may be installed. However, their cables are to be run in galvanized steel pipes of heavy gauge, and pipe joints are to be gastight.
(b) When cables for cathodic anti-corrosion devices from external power sources are installed through these compartments, for protection of the hull, they are to comply with the requirements in preceding (a).
(c) Explosion-proof lighting fittings considered suitable by the Society may be installed. However, the lighting fittings are to be arranged on at least two independent circuits, and are to be controlled by double-pole switches which are connected to locking devices of lighting fittings installed in safety zones outside the compartment. In addition, the lighting fittings and their corresponding double-pole switches are to be clearly labelled for identification.
(d) Where power supply cables to electrical equipment other than mentioned in preceding (a), (b) and (c) are led through these spaces, their cables are to be kept to essential minimum, and the cables are to be run in galvanized steel pipes of heavy gauge which are maintained gastight. Cable expansion bends are not to be provided.

(D) In dangerous spaces specified in **102.** (7) (D), (G) or (I) of this Annex.
(a) Explosion-proof electrical equipment considered suitable by the Society may be installed.
(b) Cables may be installed through these spaces, however, as a rule, cable expansion bends are not to be provided.
(E) In dangerous spaces specified in **102.** (7) (E), (F) or (J) of this Annex.
The requirements in (D) may be applied. In addition, the cables may be provided with expansion and contraction portions.

(2) Where cargo pumps or compressors are driven by electric motors, the electric motors are to be installed in separate compartments which are partitioned by gastight bulkheads or decks from the compartments where pumps or compressors are installed. In case where it is difficult to comply with the above requirements, the documents are to be submitted in advance to the Society for approval.

(3) Where the separate compartments specified in preceding (2) conform to each of the requirements below, electrical equipment in those compartments may be of types other than explosion-proof type:
(A) The construction, where the shafts pass through bulkheads or decks, is to comply with the requirements in **204. 5** (3) of this Annex.
(B) Direct openings are not to be provided to the dangerous spaces specified in **102.** (7) of this Annex.
(C) Air supply type mechanical ventilation devices, with adequate safety measures, are to be installed.

(4) Where the dangerous spaces are illuminated by lamps installed in safety zones through bulkheads or decks, one of the following requirements is to be satisfied :
(A) To be illuminated from the safety zones through gastight glass windows fitted on bulkheads or decks. However, the gastight glass windows are not to reduce strength or watertightness of the bulkheads or decks to which the windows are fitted.
(B) Explosion-proof bulkhead lighting fittings considered suitable by the Society are to be used. However, their fittings to bulkheads or decks are to be gastight, and the electric lamps are to be replaced from the safe side.

(5) It is recommended that the electrical equipment used for measuring, monitoring, controlling or communication are of intrinsically safe type.

6. Portable lighting appliances

Portable lighting appliances for use in dangerous spaces are to be of self-contained battery lamps of explosion-proof type or of explosion-proof type considered suitable by the Society.

Section 3 Low Temperature Liquefied Petroleum Gas carriers

301. Structural arrangements

1. Size of tanks

The inner length of tanks is to be 0.2 L or less. For ships less than 100m in L, the length of tanks is to be followings and over.

$$0.1L + 10 \ (\mathrm{m})$$

2. Doble bottom

Unless specially approved by the Society, double bottoms are to be provided.

3. Cofferdams

Cofferdams are to be provided between the tank holds and the main engine rooms as well as the boiler rooms. The cofferdams may be concurrently used as tanks for storage of oil having a flashing point exceeding 60°C, ballast tanks, cargo pump rooms, etc. Further, in case where non-combustible insulations are applied on bulkheads between the tank holds and the main engine rooms as well as the boiler rooms, the above cofferdams may be omitted in accordance with the following requirements.

(1) This insulation in bulkheads is to be provided at the side of main engine rooms and of boiler rooms.
(2) For insulation materials, the fire test are to be carried out in accordance with the followings:
(A) Test specimen
The test specimen which is insulated on steel plate by the actual workmanship is to be complied with IMO Res. 754(18).
(B) Fire test
The specimen is to be exposed in a test furnace to the temperatures corresponding approximately to the Standard Time-Temperature Curve.

At the end of the first 5 minutes 576°C
At the end of the first 10 minutes 679°C
At the end of the first 15 minutes 738°C
At the end of the first 30 minutes 841°C
At the end of the first 60 minutes 945°C

(C) Criteria
The average surface temperature rise of steel plates is not to be more than 140°C, and the temperature rise recorded by any of the individual surface is not to be more than 180°C above its initial temperature at any of the individual surface during 1 hour test duration.

4. Arrangement of tanks

(1) Tanks are not to be provided forward of the collision bulkhead nor aftward of the after peak bulkhead.
(2) Hull structural members, tanks, insulations, etc. are to be arranged so that at least one surface of hull structure and each tank may be seen, and the distance between the hull structure and the tank, except where the Society specially approved as to be adequate for maintenance and inspection, is not to be less than 380 mm from the inner edge of side frames excluding special frames, the inner edge of bulkhead members excluding girders and the lower edge of deck members excluding girders, and is not to be less than 610 mm from the top of inner bottom plating. Further, the distance between the tank and the side plating is not to be less than 900 mm. The arrangement of tanks is to comply with **201.** of this Annex.

5. Emergency facilities

(1) Emergency pressure relief devices are to be provided in the void spaces in tank holds. For leaked cargo, suitable discharging devices are to be provided.
(2) As a safeguard for the hull structure against major damage or failure of the tanks, devices are to be provided to throw away the cargo within a tank or tanks which have been damaged.

6. Gas detection, temperature detection, etc.

(1) Pressure relief valves are to be provided in the void spaces in tank holds so that pressures in void spaces may not rise above the predetermined pressure.
(2) To detect any leakage of cargo, a suitable number of probes for gas detectors are to be located in the void spaces in tank holds, and devices to automatically detect gas concentration are to be provided. They are to automatically indicate position and concentration of leaked gas at the location where they are placed for surveillance, either in voyage or during cargo handling. They are also to be set so that a warning signal may be issued when gas concentration exceeds at least 1/5 of the lower explosion limit value.
(3) The hull structures, which are liable to be cooled by leakage, etc. of cargo, are to be provided with temperature probes at suitable positions. They are to automatically indicate position and temperature of leaked gas at the locations where they are placed for surveillance, either in voyage or during cargo handling. They are also to be set so that a warning signal may be issued when temperature around probe becomes excessively low.

7. Watertightness of weather deck

The watertightness of weather decks around the domes of tanks is to comply with the requirements in **Pt 4, Ch 2** of the Rules.

8. Earthing

Each tank is to be electrically earthed effectively.

302. Hull Structures

1. Grades of steel in accordance with usage

(1) Where secondary barriers are provided:
Where secondary barriers are provided and layout are arranged so that hull structures may not be cooled excessively even in case of cargo leakage from tanks, the grades of steel used for hull structures are to be as specified in **Pt 3, Ch 1, 405.** and **406.** of the Rules.

(2) Where secondary barriers are not provided:

(A) At both atmospheric and sea water temperatures of 5°C and under normal conditions, the temperatures of the steel used for main hull structure are not to be equal to or lower than those listed below, depending on each grade.

RA steel	0°C
RB or RD steel	−10°C
RE steel	−20°C

(B) In case of leakage of cargo liquid from tanks, the temperatures of the steel used for main hull structure, at atmospheric and sea water temperatures of 5°C, are not to be equal to or lower than those listed below, depending on each grade.

RA steel	−10°C
RB or RD steel	−30°C
RE steel	−50°C

However, for steel plates more than 15 mm in thickness, and where their temperatures become below −35°C, steel for low temperature service specified in **Pt 2, Ch 1, 304.** of the Rules is to be used. When the temperatures of hull structure, the following condition is to be considered.

A. Ship condition
- A-1 Voyage with design load draft and design seagoing speed
- A-2 The hull is to be kept full load draft after damage outbreak, and trim and heeling are considered O condition.

B. Tank damage condition
- B-1 The damaged tank is to be one. However, in case watertight bulkheads are to be comparted in tank, one compartment may be considered.
- B-2 The damaged part is to be on the bottom. the plates of vertical, tops and etc. may not be considered.
- B-3 When the tank is damaged, it is considered that tank, support, equipment, hull, etc, are not deformed and not destruct regarding cargo as leakage and flowing out.
- B-4 It is happened in a twinkle that cargos leak and flow out, and the remained liquid level in the damaged tank and the liquid level in the empty spaces is to be equal immediately.

C. Boundary condition
- C-1 Damage is perceptible immediately.
- C-2 It is to be stationary vapour of +5°C in the compartments adjacent to vicinity empty spaces.
- C-3 The radiation of sunlight is to be ignored.
- C-4 Insulation material, supporting equipment and materials in the vicinity empty spaces are not to suck the cargo liquid except the materials for the discretion of the Society
- C-6 The phase of vapour in the vicinity empty spaces of damaged tank is that the evaporating gas is to rise at a uniform speed.
- C-7 The compartments filled with vapour other than the vicinity empty spaces of damaged tank are to be circulated naturally.
- C-8 Vapour and liquid in the same compartment may be at the same temperature.
- C-9 Vapour in the tank and phase of vapour in the vicinity empty spaces may be at the same pressure.
- C-10 The gas movement in the insulating material may be ignored.
- C-11 The humidity may be ignored.
- C-12 The effect of paint may be ignored.

D. Calculation condition
- D-1 The humidity distribution and the heat transfer are to be in normal condition. However, it is to be in abnormal condition instantaneously after damage break out.

D-2 Sea water is to be 1025 kg/m^3 of density, -2.5°C of freezing point, and others are marked with the property of fresh water.
D-3 The temperature of cargo is to be equal.
D-4 Heat transfer rate may be calculated by using the following values.

			Heat transfer rate ($kcal/m^2h℃$)
Atmosphere	↔	Hull	10
Outside sea water	↔	Hull	2000
Stationary vapour	↔	Hull or liquid	5
Stationary sea water	↔	Hull	100
Cargo liquid	↔	Hull adjacent to sea water	3000
Cargo liquid	↔	Hull adjacent to air	200

D-5 It may be considered that the temperature distribution on object without direction is not to equal generally.
D-6 Bone may be analyzed with fin.
D-7 It may be treated two dimensional problem.
D-8 The temperature of members is to be center temperature of the plate thickness, and the temperature of girder webs is to be average temperature of direction of web depth.

2. Hull structural members

Main structural members for hull referred to preceding **1.** (2) mean the members of **Table 2** of this Annex.

Table 2. Main Structural Members for Hull

Upper deck	Single hull	Deck, longitudinal beams, transverse beams, longitudinal & transverse girders
	Double hull (Topside tanks)	Inner shell plate, stiffeners, girders
Side	Single hull	Shell plates, transverse frame, side longitudinals, special frames
	Double hull	Longitudinal bulkhead plates, longitudinal bulkhead stiffeners and girders
Bilge hopper		Slopping plates, stiffeners, girders
Double bottom		Inner bottom plates, longitudinals, reverse frames of open floors
Transverse bulkhead		Bulkhead plates, stiffeners and girders
Others		Brackets (except tripping brackets)
(Note) Above girders are included girder plates and face. However, stiffeners on girder plates are not included.		

3. Material classes

In case the calculation for hull temperature is omitted, material classes for main structural members for hull are to be those specified in **Table 3** of this Annex.

Table 3. Material Classes

Member			Steel grades
Upper deck	Single hull	Deck, longitudinal beams, transverse beams, longitudinal girders and brackets	*RB* or *RD*
	Double hull (Topside tanks)	Inner shell plates	*RB* or *RD*
Side	Single hull	All main structural member	*RE*
	Double hull	Longitudinal bulkhead plates Main structure member (except above)	*RE*, *RT*-35 in case of $t \geq 15$ *RB* or *RD*
Bilge hopper		Slopping plates Main structure member (except above)	*RE*, *RT*-35 in case of $t \geq 15$ *RB* or *RD*
Double bottom		Inner bottom plates Main structure member (except above)	*RE*, *RT*-35 in case of $t \geq 15$ *RB* or *RD*
Transverse bulkhead		Bulkhead plates Main structural member (except above)	*RE*, *RT*-35 in case of $t \geq 15$ *RB* or *RD*
Tank support material		Materials for integrated tank support Materials for unintegrated tank support	Equivalent of tank material *RB* or *RD*

(Note)
1. Main structural members mean members specified in **Table 2.**
2. The steel grades except main structural members specified in **Table 2** are to comply with **Pt 3, Ch 1, 405.** of the Rules.
3. t is thicknes

303. Tanks

1. Materials

The steel materials used in important parts of tanks are to be those specified in **Table 4** of this Annex or their equivalents.

Table 4 Kinds and Grades of Steel for Use in Tanks

Range of temperatures in service T (°C)	Thickness t (mm)		
	$t \leq 15$	$15 < t \leq 20$	$20 < t$
$-10 < T \leq 0$	*RB*	*RD*	*RE*
$-25 \leq T \leq -10$	*RE*, *RL* 24*A*		
$-35 \leq T < -25$	*RL* 24*A* or *RE* (for $t \leq 9$)		*RL* 24*B*, *RL* 33 or *RL* 37
$-50 \leq T < -35$	*RL* 24*B*, *RL* 33, *RL* 37		Material considered suitable by the Society.

2. Workmanship

(1) Tanks are to be shaped so that excessive stress concentration may be avoided, and any corners are to be smoothly rounded.
(2) The joining of tank plates are to be butt joints welded from both sides, except where specially approved by the Society.

3. Manholes

A manhole of each tank is to be provided above the weather deck, and its size is not to be less than 275 mm × 375 mm nor of diameter less than 375 mm.

4. Layout and scantlings of tank material

(1) The materials of which tanks are built are to be of sufficient strength in consideration of internal pressure of cargo, increased load due to inclination of tanks as well as dynamic loads due to ship motion, etc. However, the scantlings are to be in accordance with the following:

(A) The thickness of tank plates is not to be less than obtained from the following formula or 7 mm, whichever is the greater:

$$3.42S\sqrt{h}\times\sqrt{\frac{41}{\alpha}}+2.2 \quad (\mathrm{mm})$$

where

S : Spacing of stiffeners (m)

α : Specified minimum tensile strength of material used ($\mathrm{kg/mm^2}$)

h : Distance from the lower edge of tank plate to the top of hatch opening (m)

(B) The section modulus of stiffeners on tank plates is not to be less than obtained from the following formula:

$$CShl^2\frac{41}{\alpha} \quad (\mathrm{cm^3})$$

where:

C and l : As specified in **Pt 3, Ch 15, 203.** of the Rules.

α and S : As specified in preceding (A)

h : Distance from the mid-point of l for vertical stiffeners, or from the mid-point of distance between the adjacent stiffeners for horizontal stiffeners, to the top of hatch opening (m)

(C) The depth, thickness of webs and face area of girders to support stiffeners on tank plates are not to be less than obtained from the following formulae respectively.

Depth of girder: 143 l (mm) or 2.5 a (mm), whichever is the greater.

Thickness of web : 0.01d_0 + 2.0 (mm). However, in any case, the thickness of web is not to be less than obtained from the following formula:

$$0.0417C\frac{Shl}{d_1}\times\frac{41}{\alpha}+1.5 \quad (\mathrm{mm})$$

Face area : $71.3\frac{Shl}{d_0}\times\frac{41}{\alpha}-\frac{d_0t}{600}$ ($\mathrm{cm^2}$)

where

C, S, l and d_1 : As specified in **Pt 3, Ch 15, 204.** of the Rules.

d_0 : Depth of girders (mm)

a : Depth of slots for stiffeners (mm)

t : Thickness of webs of girders

α : As specified in preceding (A)

h : Distance from the mid-point of l for vertical girders, or from the mid-point of S for horizontal girders, to the top of hatch opening (m)

(2) Plates, stiffeners and girders of wash bulkheads provided in tanks are to be of sufficient strength in consideration of the size of tanks as well as of their opening ratio.
The scantlings of wash bulkheads are not to be less than obtained in accordance with **Pt 3, Ch 15** of the Rules by taking h_s obtained from the following formula instead of h. However, h_s is to be not less than 2.0.

$$h_s = \rho\left(0.176 - \frac{0.025}{100}L\right)(1-a)l_t$$

where

ρ : Specific gravity of cargo

L : Length of ship (m)

a : Opening rate of plates

l_t : Length of tanks (m)

304. Tank supports and fixings

1. Tank supports

Tank supports are to be made of suitable materials and are to be so constructed as to avoid any excessive load concentration on the hull structure as well as the tanks. They are also to be capable of coping with expansion or contraction due to change in tank temperature and are also to be of sufficient strength in consideration of the tank weight as well as the forces due to ship motion by rolling, pitching, etc.

2. Stopper of movement

Means of preventing movement of the tanks is to be provided so that the tanks may not move due to ship motion. This means of preventing the movement is to be capable of coping with expansion or contraction due to change in tank temperature and are also to be of sufficient strength in consideration of the forces due to ship motion by rolling, pitching, etc.

3. Prevention means of tank floating

Tanks are to be provided with devices to prevent floating of tanks, when void spaces in tank holds are flooded due to maritime disaster or other causes, thereby causing considerable damage to the hull structure by the floating of empty tanks.

305. Heat insulation

1. Heat insulation of tanks

Periphery of tanks is to be effectively heat insulated so as not to cool the hull excessively.

2. Heat insulating materials

The insulating materials are to be such that they withstand external forces applied during service and that their properties will not change remarkably when in contact with cargo.

306. Tank fittings

1. General

(1) Tanks are to be provided with necessary fittings for cargo handling as well as for safety.

(2) The openings provided on tanks are to be provided on domes extending above the weather deck, except where specially approved by the Society.

(3) No flexible coupling other than of bending tube type, is to be provided between the tank and the valve fitted to the tank.

2. Materials

Materials for tank fittings are to be such that they are not easily affected by cargo and they reserve sufficient mechanical properties at the lowest cargo temperature.

3. Stop valves

(1) A manual stop valve is to be provided on each piping connected to the tank, as close to the tank dome as possible, except the safety valves, vacuum relief valves and level gauges. Where the valve is remote-controlled, it is to be capable of being opened or closed manually.

(2) No stop valve is to be provided between the tank and the safety valves as well as the vacuum relief valves.

4. Pressure gauges and alarm devices for low pressure

A pressure gauging device which suitably indicates gas pressure in the tank is to be provided on each tank. It is to be of such type that the tank pressure can be checked near the dome and further the pressure is to be read at place from which surveillance is carried out in voyage and during cargo handling. Further, an alarm device is to be provided which operates at a pressure higher than the set pressure of the vacuum relief valve, when tank pressure decreases.

5. Thermometers

Means are to be provided for determining the temperature of the tank walls. Measuring points are to be arranged so that the temperature difference of the tank walls may be indicated.

6. Liquid level gauges and alarm devices

A liquid level gauging device is to be provided in each tank to determine the level of the liquid without opening the tank. Independent high level alarms are to be provided, which are to issue alarm signal at places where cargo handling is being watched or controlled.

7. Overpressure safety valves

(1) Two or more safety valves against overpressure are to be provided on each tank at the uppermost point of gas part. In case of pilot-type safety valves, a separate pressure detecting terminal is to be provided respectively.

(2) The total capacity of safety valves against overpressure is to be such that it is capable of discharging the amount specified in (A) or (B), whichever is the greater, at a pressure not exceeding 1.2 times the set pressure:

(A) The total amount of gas at ambient temperature of 45°C by adding the amount of gas generated due to heat input into the tank to the gas quantity discharged during loading at a full capacity.

(B) The quantity of gas to be generated by heat input into the tank in case of fire, represented by the amount of gas generated from the heat quantity obtained from the following formula. Where, however, specially approved by the Society in consideration of the hull structure and tank structure, the coefficient of 12,200 in the following formula may be reduced in the range down to 6,100. Further, where the shape construction, and layout of the tanks differ from those set forth in **102**. (2) of the Annex or where application of the following formula is not considered practical, the calculation method will be decided in each case.

$$Q_h = 12{,}200\,A^{0.82}$$

where

Q_h : Heat input $(\mathrm{kcal/h})$

A : Total surface area of the tank, excluding the surface area below the minimum draught in ballast condition (m^2)

8. Protection devices of tank against vacuum

The following protection devices are at least to be provided so as not to cause dangerous vacuum condition in each tank:

(1) Automatic stopping devices at low pressure for machinery, such as cargo pumps and refrigerating facilities which may cause vacuum condition in the tank. The pressure detecting arrangement of the automatic stopping device is to be separate from that of low pressure alarm specified in preceding **Par. 4.** However, the automatic stopping device may be considered as the alarm device, where the Society considers it to be equivalent to the alarm device in respect of its design.

(2) Vacuum relief valve which copes with the maximum unloading rate of the tank.

9. Precooling of tanks

Precooling arrangements are to be made on the tanks so as not to generate dangerous thermal stress at the time of loading.

307. Cargo piping systems

1. Application

The piping systems are to comply with the requirements in **307.** as well as with those for Class 1 piping specified **Pt 5, Ch 6** of the Rules.

2. Arrangement

All of the cargo pipings other than those installed in tanks, pump rooms and gas compressor rooms, are to be installed on the weather decks, except where approved by the Society.

3. Maximum working pressure, materials and others for cargo piping system

(1) The maximum working pressure of piping system is defined as the maximum value of the pressure of the system in ordinary service. Where additional pressure is applied by pumps, compressors, etc., the maximum value is to be decided taking account of such an additional pressure.

(2) Even where the maximum working pressure of the piping system is less than 0.5 MPa, the pipe and pipe fittings are to be so designed as to withstand the standard pressure of 0.5 MPa, except that of vent lines in **12.** below.

(3) The materials for the piping facilities are such that they are not easily affected by cargo and that they have sufficient mechanical properties even at the lowest cargo temperature.

4. Pipe joints

(1) Pipe joints, other than those for piping within tanks and those for vent piping, are to be butt-welded or flanged couplings, and the pipes and flanges are to be welded.

(2) Pipe flanges other than those for vent piping are generally to be of raised-face type.

(3) Screw joints of KS B 0222 with dimensions of PT 25 or less may be used at visible locations where they can be shut off by valves from tanks and pressure vessels for liquid and from the main pipes for cargo handling.

5. Expansion joints

Expansion joints are to be provided at suitable locations within the piping system to prevent generation of excessive stress due to expansion or contraction. The expansion joints are to be bent pipes or to be of other approved construction.

6. Prevention of mis-handling

(1) The piping devices for a number of tanks, some of which are for exclusive use for a certain cargo, are to be so arranged that an exclusive piping is to be provided individually for each different cargo, except where the common use of piping or mixing of cargoes will not cause any trouble.

(2) Where exclusive pipings are connected each other, means to avoid mis-operation is to be provided.

7. Shore connections

(1) At the connections between shore pipes for cargo handling (for both liquid and gas) and load headers of ship, shut-off valves are to be provided, each of which can be remotely shut off in case of emergency. The valves are to be such that they can shut off from other easily accessible locations than the regular place as well.

(2) Connections between shore pipes and ship's piping are to be so arranged as to be electrically connected each other.

8. Relief valves in pipe lines

A relief valve is to be provided on each pipe line in which the pressure may possibly rise above the maximum working pressure and on each pipe line in which the liquid may possibly be locked.

9. Pipe supports and fixings

All pipe lines are to be provided with adequate supports to prevent the weight of pipe lines from acting on valves and fittings and also to prevent excessive vibration. Pipe lines for use at low temperature are to be fixed so that adjoining hull structures may not be cooled excessively.

10. Earthing

Each pipe line is to be electrically connected and earthed effectively.

11. Cargo hoses

Cargo hoses equipped in ships are to be of materials not easily affected by cargoes and to be of suitable mechanical properties even at the working temperature, and are to be designed for a bursting pressure not less than 5 times the maximum working pressure (at least 2.5 MPa) to which they may be subjected.

12. Vent pipes

(1) Discharge from safety valves and relief valves is to be led to vent pipes. However, discharge from relief valves in pipe lines may be led into tanks, where effectiveness of relief valves is not lowered.
(2) The provisions in **203. 12** (2), (3) and (4) of this Annex are to apply.
(3) Each outlet end of vent pipes is to be located at a position 1/3 of the ship's breadth above the weather deck and where it is not liable to impair safety of the ship as far as practicable. At each outlet of the vent pipes, a suitable flame arrester is to be provided, and it is to be arranged so that the discharge may not blow out downward from the horizontal.

308. Cargo refrigerating facilities

1. Refrigerating facilities

At least two sets of refrigerating facilities are to be provided, and each of them is to be arranged for immediate use by switching.

2. Capacity

The capacity of refrigerating facilities is to be sufficient to maintain the cargo at the specified temperature, even in case where one set is out of service for 24 hours a day and only the remaining set or sets are in operation.

3. Re-liquefying facilities

(1) Where refrigerating facilities are of a type in which refrigerant is used, **Pt 9, Ch 1, 401. 1** to **4, 403. 3, 4, 404.** and **405.** of the Rules are to be applied to these refrigerating facility.
(2) Where refrigerating facilities are of a type in which gas is directly liquefied under pressure, **204. 5** (1), (3) to (6) and 6 of this Annex as well as **Pt 9, Ch 1, 401. 1** to **4, 403. 4** (2), **404. 4** and **405.** of the Rules are to be applied.
(3) As for pressure vessels subjected to pressure of liquid and gas, the approved working pressure is to be at least 0.5 MPa and the requirements in **202. 1** to **4** of this Annex as well as **Pt 5, Ch 5** of the Rules are to be applied. As for safety valves, level gauges and other fittings, the requirements in **203. 9, 11, 13** (3) to (5) of this Annex are to be applied.

4. Automatic stopping devices against low pressure

The automatic stopping devices of refrigerating facilities specified in **306. 8** (1) of this Annex are to be so adjusted as to stop at a higher pressure than the set pressure of the vacuum relief valve on the tank. In addition, this automatic stopping device is not to lose its effectiveness even when the refrigerating facility is manually operated.

5. Earthing

All machinery and equipment for liquid and gas are to be earthed effectively.

309. Cargo handling facilities

1. Cargo handling facilities

In addition to the regular cargo pump facilities, any ship is to be provided with stand-by units and the units may be as follows:

(1) In case of a tank provided with two or more pumps, the stand-by units may be omitted in spite of being used.

(2) The stripper pump may be permitted with stand-by units.
(3) The eductor may be permitted with stand-by units.

2. Materials

The materials for cargo handling facilities are to be suitable for kind of cargo and temperature to be encountered in service.

3. Cargo pumps

The requirements in **204. 5** (1) to (5) of this Annex are also to apply.

4. Automatic stopping and remote stopping devices of cargo pumps

(1) Any pump is to be provided with an automatic stopping device or its equivalent to operate when liquid level in the tank reaches the predetermined low level, so as to protect the pump as well as its driving machinery.
(2) The automatic stopping device to operate at low pressure set forth in **306. 8** (1) of this Annex is to be so adjusted as to automatically stop at a higher pressure than the set pressure of the vacuum relief valve on the tank.
(3) The pumps are to be stopped from a remote location where cargo handling is watched or controlled.

5. Gas compressors and accessories

Where compressors are installed for delivery and loading of gas, the requirements in **308. 3** (2), (3) and **308. 4** of this Annex are to apply.

6. Earthing

All machinery and equipment for liquid and gas are to be electrically earthed effectively.

310. Ventilation system, etc.

1. Ventilation system, etc.

(1) The requirements in **205. 1** (1), (2), (4), 2 and **5** of this Annex are to apply.
(2) Tank holds are to be provided with bilge discharging facilities. The bilge suction pipe, however, is not to be led to non-dangerous spaces in the ship.

2. Installation of equipment causing ignition sources

Equipment which may cause ignition sources is not to be installed in the dangerous spaces specified in **102**. (7) of this Annex.

311. Electrical installations

1. Application

The electrical installations are to comply with these requirements as well as the requirements in **206.** of this Annex.

2. Power supply to cargo refrigerating facilities

Where all the machinery of the cargo refrigerating facilities specified in 308. of this Annex are electrically driven, the power supply is to be arranged from two or more generators, and the power supply to electric motors are to be made from circuits divided into at least two or more groups, through a main switch board or equivalent distribution board. ⚓

Annex 7A-2 Guidelines for the Evaluation of the Adequacy of Type C Tank Vent Systems

101. General

1. The tank outlet to the pressure relief valves is to remain in the vapour phase at the 98% liquid level, 15° of heel angle and 0.015 L of pitch angle.

2. Pressure relief valves which have been sized in accordance with **Pt 7, Ch 5, Sec 8** of the Rules, are to have adequate capacity.

3. To assure adequate relieving capacity condition, followings are to be complied with :

(1) The pressure drop in the vent pipe from the cargo tank to the pressure relief valve inlet ($\Delta p_{\in \leq t}$) is not to exceed 3% of MARVS, at the pressure relief valve capacity required in Rules from equation **103.** (1) below, at 1.2 times maximum allowable relief valve setting (gauge pressure, hereafter MARVS) on all vapour flow.

(2) The blowdown (Δp_{close}) is not to be less than $\Delta p_{\in \leq t}$ + 0.02 × MARVS at the installed rated vapour capacity where required to assure stable operation of the pressure relief valve. This calculation is to be carried out at MARVS on all vapour flow. Pilot-operated valves can tolerate higher inlet-pipe pressure losses when the pilot senses at a point that is not affected by the inlet-pipe pressure drop.

4. The built-up back pressure in the vent piping from the pressure relief valve outlet to the location of discharge to the atmosphere, and including any vent pipe interconnections which joint other tanks, is not to exceed the following values :

(1) For unbalanced pressure relief valves : 3 % MARVS.
Special consideration may be given in cases where the back pressure exceeds 10 % of MARVS at a tank pressure of 1.2 × MARVS; and

(2) For balanced pressure relief valves and pilot-operated pressure relief valves as advised by manufacturer : normally 30 % of MARVS for balanced pressure relief valves and 50 % of MARVS for pilot-operated pressure relief valves,
when assuming isenthalpic expansion of saturated liquid, at 1.2 × MARVS, through the pressure relief valve with the vent piping under fire exposure.

5. The built-up back pressure in the vent piping may be estimated by the procedures outlined in **102.**

6. A more accurate procedure for evaluating tank vent systems on flashing two-phase flow is to be consulted if these simplified procedures of **102.** do not demonstrate compliance with the preceding **3** and **4.**

102. Procedures

The following procedures are to be complied with to demonstrate the adequacy of a tank vent system to limit the pressure rise in a cargo tank to not greater than 1.2 × MARVS during all conditions, including fire conditions implicit in **Pt 7, Ch 5, 805. 2** of the Rules.

(1) Prepare a simplified flow sheet of the cargo tank vent system, identifying the fittings and the actual diameters and lengths of pipe.
Divide the system into sections between nodes at changes in pipe diameter and at inter-connections with flows from other relief valves.
List the fittings and their dynamic loss coefficients. Calculate the external surface area of the piping sections between the nodes.

(2) Calculate the pressure relief valve capacity (Q_{GCC}) of each tank pressure relief valve, in m^3/s of air at standard conditions in accordance with **Pt 7, Ch 5, 805. 2** of the Rules and note the installed rated capacity (Q_{IR}) of each pressure relief valve in m^3/s air at standard conditions at 1.2 × MARVS. The calculation is to be done for the highest gas factor of the products included in the cargo list. N-Butane has often the highest value for gas factor "G" in the Rules and usual1y determines the Rule minimum capacity.
Determine the mass flows for cargo conditions at 1.2 × MARVS through each pressure relief valve for the pressure relief valve capacity and for the installed rated capacity for both all vapour flow and for two phase cargo flow. Also calculate the mass flow at MARVS for the installed rat-

ed capacity on all vapour flow.
Equation in **103.** (1) may be used for all vapour mass flow and equations in **103.** (2), (3) and (4) may be used for two phase mass flow. Equation in **103.** (2) may be applied to multi-component mixtures whose boiling point range does not exceed 100 K.

(3) Estimate all the vapour flow pressure drop in the pipe from the cargo tank connection inlet flange, working from the known tank pressure towards the pressure relief valve. This pressure drop is calculated by using the difference in stagnation pressures. Therefore, the second term of equation in **103.** (5) (A) may be used for pipe sections of constant diameter. For contractions, equation in **103.** (5) (B) may be used.

(4) Check that the pressure drop at each pressure relief valve inlet complies with **101. 3** (1), at the pressure relief valve capacity for all vapour flow to assure adequate relief capacity. For the calculation, the vapour mass flow of product (W_g) from equation in **103.** (1) is to be used.
For control purposes, **101. 3** (1) is to be repeated using the pressure relief valve two-phase flow (W', equation in **103.** (4)) at 1.2 × MARVS and **101. 3** (2) by using the installed rated two-phase flow at MARVS. Both calculations are to give a smaller inlet pressure loss than the corresponding all vapour pressure loss.
Check that the blowdown (Δp_{close}) complies with **101. 3** (2) to assure stable operation.

(5) Estimate the two-phase flow pressure in the discharge pipe at the location of discharge to the atmosphere. Equation in **103.** (6) may be used, with the pressure relief valve two-phase mass flow (W') to assure adequate relief capacity, to check if the exit pressure is greater than 0.1 MPa.

(6) Estimate the vapour fraction and two-phase density in the vent pipe at the exit to the atmosphere, assuming transfer of the fire heat flux of 108 kW/m^2 through the uninsulated vent piping. Equations in **103.** (7) and (8) may be used.

(7) Estimate the built-up back pressure at the pressure relief valve outlet flange, commencing from the known vent pipe exit pressure, calculating the pressure drop between pipe nodes and working, section by section, back up the pipe to the pressure relief valve.
Equations in **103.** (7), (8) and (5) (A) may be used with iteration until the upstream node absolute pressure, vapour fraction and specific volume are justified and assuming that vapour is saturated.
At pipe diameter expansion fittings where fluid velocity is reduced, a pressure recovery generally occurs. This recovery is overestimated in case of two-phase flow when dynamic loss coefficients for single-phase flow are used. For the purpose of these guidelines, the static exit pressure of a conical expansion fitting is assumed to be equal to the static inlet pressure.

(8) Estimate the choking pressure(p_{ec}) at the exit of every section with the mass flux (G_p) in that section for the pipeline between the pressure relief valve and the vent exit. Equation in **103.** (6) may be used.
Compare the pressure distribution along the vent line as derived from preceding (5) to (7), with the different choking pressures for each section as derived from equation in **103.** (6).
If choking pressure at any location exceeds the corresponding calculated pressure derived from preceding (5) to (7), the calculation as described in preceding (5) to (7) is to be repeated commencing from choking point location and corresponding choking pressure, working back up the pipe to the pressure relief valve.
If choking pressure at more than one location exceeds the corresponding calculated pressure derived from preceding (5) to (7), the commencing point of the recalculation is to be taken as the choking location point giving the highest built-up back pressure.

(9) Check that the built-up back pressure at each pressure relief valve outlet complies with **101. 4** at the pressure relief valve capacity for two-phase mass flow (W'), to assure stable operation of the valves, thus assuring adequate relief capacity.

(10) For conventional unbalanced valves only :
(A) If back pressure as derived from preceding (5) to (8) is within the range of 10 % to 20 % of MARVS, an additional evaluation is to be performed in order to decide whether the system is acceptable.
(B) The system is to perform with the following requirement: with one valve closed and all others discharging at the installed rated pressure relief valve capacity, and the back pressure is to be less than 10 % of MARVS.

103. Equations

The following equations may be used to demonstrate the adequacy of the vent system.

(1) For all vapour mass flow rate from tank through pressure relief valves

$$W_g = \frac{71 \cdot 10^3 \cdot F \cdot A^{0.82}}{h_{fg}} \quad (\mathrm{kg/s})$$

where

F : Fire exposure factor according to **Pt 7, Ch 5, 804.** of the Rules

A : External surface area of type C tank ($\mathrm{m^2}$)

h_{fg} : Latent heat of vaporization of cargo at 1.2 × MARVS ($\mathrm{J/kg}$)

(2) For isenthalpic flashing mass flux of liquid through pressure relief valve orifice
This equation is valid for multi-component mixtures whose boiling point range does not exceed 100 K.

$$G_v \approx h_{fg} \cdot p_g \left(\frac{1}{T_0 \cdot c} \right)^{\frac{1}{2}} \quad (\mathrm{kg/m^2 s})$$

where

h_{fg} : Latent heat of vaporization of cargo at 1.2 × MARVS ($\mathrm{J/kg}$)

p_g : Vapour density 1.2 × MARVS and corresponding boiling temperature ($\mathrm{kg/m^3}$)

T_0 : Temperature of cargo at 1.2 × MARVS (K)

c : Liquid specific heat at 1.2 × MARVS ($\mathrm{J/kgK}$)

(3) For two-phase mass flow rate through pressure relief valve is installed

$$W = G_v \cdot K_w \cdot A_v \quad (\mathrm{kg/s})$$

where

G_v : being taken from preceding (2) ($\mathrm{kg/m^2 s}$)

K_w : Pressure relief valve discharge coefficient on water(approx. 0.8 × measured K_d on air)

A_v : Actual orifice area of pressure relief valve ($\mathrm{m^2}$)

(4) For pressure relief valve capacity for two-phase mass flow

$$W' = G_v \cdot K_w \cdot A_v \frac{Q_{GCC}}{Q_{IR}} \quad (\mathrm{kg/s})$$

where

Q_{GCC} : Pressure relief valve capacity of air at standard conditions in accordance with **Pt 7, Ch 5, 804. 1** of the Rules ($\mathrm{m^3/s}$)

Q_{IR} : Installed rated pressure relief valve capacity of air at T=273K and p=0.1013 MPa ($\mathrm{m^3/s}$)

(5) For the calculation of the static pressure difference in a pipe section of constant diameter in which the mass flux (G_p) is constant

(A) $$\Delta p = G_p^2 (v_e - v_i) + \frac{1}{2} \cdot G_p^2 \left(\frac{v_e + v_i}{2} \right) \left(4f \frac{L}{D} + \Sigma N \right) \quad (\mathrm{Pa})$$

where

G_p : Mass flux through the pipe section

$$G_P = \frac{W}{\pi D^2/4} \text{ or } \frac{W'}{\pi \cdot D^2/4} \quad (\mathrm{kg/m^2s})$$

v_e : Two-phase specific volume at pipe section exit $(\mathrm{m^3/kg})$
v_i : Two-phase specific volume at pipe section inlet $(\mathrm{m^3/kg})$
f : Fanning friction factor f = 0.005 for two-phase fully turbulent flow
L : Length of pipe section (m)
D : Diameter of pipe section (m)
ΣN : Sum of dynamic loss coefficients for fittings in the pipe section, $N = 4f \cdot L/D$ equivalent (typical values of N are given in **Table 5**)

Table 5 Typical Values for Dynamic Loss Coefficient for Vent System Fittings

Fitting	$N(=4f \cdot L/D)$
Inlet pipe from tank to Pressure relief valve	
- Square-edged inlet	0.5
- Protruding conical inlet	0.15
- Conical reduction	0.10
Discharge piping from Pressure relief valve to mast vent exit	
- 45° bend	0.2
- 45° single-mitre elbow	0.45
- 90° long redius bend	0.3
- 90°short radius bend	0.5
- 90° double-mitre elbow	0.6
- Soft-tee	0.3
- Hard-tee	1.1
- Cowl mast vent exit	2.25
- Top-hat mast vent exit	4.5
- Flame screen(**Pt 7, Ch 5, 1710.** of the Rules)	1.4
(Note) N may vary with pipe diameter	

(B) For contractions, the difference in stagnation pressure is defined by :

$$\Delta p = \frac{1}{2} \cdot G_{p,e}^2 \cdot v_i N \quad (\mathrm{Pa})$$

where
N : Dynamic loss coefficients of the contraction
$G_{p,e}$: Mass flux at the exit of the contraction $(\mathrm{kg/m^2s})$
v_i : Specific volume at the inlet of the contraction $(\mathrm{m^3/kg})$

(6) For two-phase critical chocking pressure at vent mast exit or exit from any vent pipe section

$$p_{ec} = G_p \left(\frac{p_0 \omega}{\rho_0} \right)^{\frac{1}{2}} \quad (\mathrm{Pa})$$

where

G_p : as defined in preceding (5) (A)

p_0 : Cargo vapour pressure in tank at inlet to pressure relief valve (Pa)

ρ_0 : Cargo liquid density in tank at inlet to pressure relief valve at p_0 and T_0 (kg/m^3)

ω : Compressible flow parameter in tank at inlet to pressure relief valve

$$= \alpha_0 + (1-\alpha_0)\frac{\rho_0 \cdot c \cdot T_0 \cdot p_0 \cdot (v_{go}-v_{fo})^2}{(h_{go}-h_{fo})^2}$$

where

α_0 : Inlet void fraction or vapour volume fraction at inlet to pressure relief valve
0, when assuming isenthalpic expansion of saturated liquid, at 1.2 × MARVS, through the pressure relief valve

c : See preceding (2)

T_0 : See preceding (2)

$(v_{go}-v_{fo})$: Difference in gaseous and liquid specific volume at temperature T_0 at inlet to pressure relief valve (m^3/kg)

$(h_{go}-h_{fo})$: Difference in gaseous and liquid enthalpy at temperature T_o at inlet to pressure relief valve (J/kg)

(7) For exit quality, or vapour mass fraction at pipe section exit

$$x_e = \frac{h_{fo}-h_{fe}+1000 \cdot q \cdot \Sigma\frac{a}{W}}{h_{fg}}$$

(e.g. x_e = 0.3 ≡ 30 % quality ≡ 30 % vapour + 70 % liquid by mass)

where

h_{fo} : Liquid enthalpy in tank at inlet to pressure relief valve (J/kg)

h_{fe} : Liquid enthalpy at back pressure at pipe section exit (J/kg)

h_{fg} : Latent heat of vaporization at pipe section exit (J/kg)

q : Heat flux from fire exposure into vent pipe equal to 108 kW/m^2

a : Heated external surface area of vent pipe section (m^2)

W : Mass flow rate in vent pipe section (kg/s)

(8) For two-phase density(ρ) and specific volume (v)

$$\rho = \frac{\rho_g}{x} \quad (kg/m^3)$$

where

ρ_g : Saturated vapour density at pipe section inlet or exit (kg/m^3)

x : Vapour fraction at pipe section inlet or exit

$$v = \frac{1}{\rho} \quad (m^3/kg)$$

Annex 7A-3 LNG Bunkering Systems [See Rule]

Section 1 General

101. Application

1. At the request of the owner, the requirements in this Annex applies to ships carrying liquefied gas in bulk fitted with systems for delivering LNG bunker to ships using LNG as fuel. This Annex also applies to a ship carrying liquefied gas in bulk transferring LNG cargo to another ships carrying liquefied gas in bulk.
2. This Annex provides requirements for design, construction and survey for bunkering systems and relevant safety systems installed in a bunkering vessel, and hull, machinery and cargo related requirements other than bunkering systems are to comply with **Ch 5** of the Rules and other related Rules.

102. Definitions

1. **Receiving ship** means is the ship that receives LNG fuel.
2. **Transfer system** means a system used to connect the bunkering ship and manifold of the receiving ship in order to deliver LNG bunker to a receiving ship. Transfer hoses or a transfer arms can be used for transfer systems.
3. **Emergency Shutdown(ESD)** means a system that safely and effectively stops equipment and operation and closes valves related with the transfer of LNG and vapor between the bunkering ship and the receiving ship in the event of an emergency.
4. **Emergency Release Coupling(ERC)** means a device to provide a means of quick release of the transfer connections by excessive force applied to the coupling when such action is required as an emergency measure
5. **Emergency Release System(ERS)** means a system that provides a positive means of quick release of transfer connections and safe isolation of bunker vessel and receiving ship gas fuel systems
6. **Quick connect disconnect coupler(QCDC)** means manual or hydraulic mechanical device used to clamp the transfer arrangement presentation flange to manifold of receiving ship without use of bolted connections.
7. **Operational envelope** means room in which the presentation flanges of bunker vessel and receiving ship can operate safely.
8. **Person in charge** means a person who is responsible for the overall management of the bunkering operation.
9. **Bunkering control station** means a space used in the control of bunker handling operations.
10. **Certified safe type** means electrical equipment that is certified safe by the relevant authorities recognized by the Society for operation in a flammable atmosphere based on a recognized standard.

103. Class notations

1. Ships which comply with this Chapter may be assigned with the LNG Bunker notation as an additional installation notation at the request of the owner
2. Where a ship assigned the LNG Bunker notation incorporates systems for handling of excess vapor return from the receiving ship, VRS notation may be assigned in accordance with the followings.
   (1) The capacity of vapor recovery expressed in kW is assigned next to VRS. For example, where the capacity is [X] kW, the notation will be assigned as LNG Bunker(VRS[X]).
   (2) Requirements for the notation is to be in accordance with **505.**.

104. Equivalence and novel features

1. The construction and equipment, etc. which are not in compliance with the requirements of the Guidance but are considered to be equivalent to those required in the Guidance will be accepted by the Society.
2. The Society may consider the classification of the construction and equipment based on or applying novel design principles or features, to which the Rules are not directly applicable, on the basis of experiments, calculations or other supporting information provided to the Society.

105. Codes and standards

The recognized national, international and industrial standards such as the followings may be adequately referred.

Standard No.	Standard Title
OCIMF/SIGTTO	Ship to Ship Transfer Guide(Liquefied Gases)
OCIMF/SIGTTO	Recommendations for Manifolds for Refrigerated Liquefied Gas
ISO 16904	Petroleum and natural gas industries - Design and testing of LNG marine transfer arms for conventional onshore terminals
EN 1474-2	Installation and equipment for liquefied natural gas - Design and testing of marine transfer systems - Design and testing of transfer hoses
EN 1474-3	Installation and equipment for liquefied natural gas - Design and testing of marine transfer systems - Offshore transfer systems
ISO 21593	Technical requirements for dry-disconnect/connect couplings for bunkering liquefied natural gas *(2022)*
IACS	LNG Bunkering Guidelines
SIGTTO	ESD Arrangements & Linked Ship/ Shore Systems for Liquefied Gas Carriers
IAPH	LNG Bunkering Checklist - Ship to Ship

Section 2 Classification Survey during Construction

201. Submission of plans and documents

At the Classification Survey during Construction, the following plans and documents for bunkering systems are to be submitted to the Society before the work is commenced.

(1) Plans and documents for approval
  (A) Power system and Control system diagram
  (B) Plans showing hazardous area
  (C) Electric wiring plans and a table of electrical equipment in hazardous area
  (D) Arrangements and cause and effect diagram for emergency shutdown systems and fire and gas detection systems
  (E) Piping diagram
  (F) Strength analysis for supporting structures and foundations for transfer arm
  (G) Arrangements for Bunker manifold including protection against low-temperature cargo leaks
  (H) Bunkering operation manual

(2) Plans and documents for reference *(2022)*
  (A) Arrangements for transfers arms or hoses
  (B) Working envelope diagram for transfer arms
  (C) Specification for transfer arms or transfer hoses
  (D) Gas trial procedure
  (E) Where VRS notation is assigned, capacity calculation for vapor return systems required in **505. 7**

202. Tests and surveys

1. Tests of equipment

(1) Following equipment which form the transfer arm is to be type approved and tested for each production correspondingly in accordance with **ISO 16904**. In application to this requirement, prototype test in accordance with **ISO 16904** may be accepted instead of type approval. *(2022)*
(A) swivel
(B) emergency release system
(C) hydraulically operated quick connect disconnect coupler
(2) After assembly, transfer arms are to be tested in accordance with **ISO 16904**.
(3) Transfer hoses are to be type approved and tested for each production correspondingly in accordance with **EN1474-2**. In application to this requirement, prototype test in accordance with **EN1474-2** may be accepted instead of type approval. *(2022)*
(4) Emergency release systems which are not subject to above (1) (B)(i.e. connected to transfer hoses) are to be type approved and tested for each production correspondingly in accordance with **ISO 16904**. In application to this requirement, prototype test in accordance with **ISO 16904** may be accepted instead of type approval. *(2022)*
(5) Quick connect disconnect couplers which are not subject to above (1) (B)(i.e. connected to transfer hoses) are to be type approved and tested for each production correspondingly in accordance with **ISO 21593**. In application to this requirement, prototype test in accordance with **ISO 21593** may be accepted instead of type approval. *(2022)*
(6) Hose cranes are to be test in accordance with **Pt 9, Ch 2** of the Rules.
(7) Pump and valves are to be test in accordance with **Ch 5, 513.** of the Rules.

2. Onboard tests

(1) Correct operation of emergency shut down systems and emergency release systems is to be function-tested. and their sequence of operation required by **603.** and **604.** is to be confirmed.
(2) All indicators, alarms and safety functions related to the gas fuel transfer equipment are to be function-tested.
(3) Correct operation of gas detection system to be verified.
(4) Transfer arms are to be tested in accordance with **ISO 16904** after installed on board.

3. Gas trial

(1) The gas trials are to be conducted in accordance with the submitted testing procedure during gas trials.
(2) In addition to tests required in **Ch 5**, the followings are to be tested.
(A) Where VRS notation is assigned, capacity and performance of vapor return systems are to be tested.
(B) Bunkering systems, including control, alarm and safety systems are to be function-tested.

Section 3 Periodical Surveys

301. General

In the case of items not specified in this Section, the requirements specified in **Pt 1, Ch 2** of the Rules are to be applied.

302. Annual survey

1. Emergency release systems are to be function-tested.

2. Satisfactory resistance of insulated flanges are to be examined.

3. Satisfactory operation of Emergency shutdown systems for pump, gas compressor and emergency shutdown valves used for bunkering are to be confirmed.

4. Tests and survey for transfer hoses are to be in accordance with the followings
(1) Confirming the satisfactory condition of hoses including end connection.
(2) Confirming the satisfactory condition of hose cranes and supports.

5. Transfer arms are to be in accordance with the followings
   (1) Confirming the satisfactory function of arms.
   (2) Visual inspection of piping and other parts of arms.

303. Intermediate Surveys

At each Intermediate Survey, all the requirements of Annual Survey are to be complied with.

304. Special Surveys

At the Special Survey, in addition to the requirements for Intermediate Survey, the following requirements are to be complied with.

1. Confirming the satisfactory condition of swivel and sealing, ect. of transfer arms and, if necessary, leakage test is to be performed.
2. Confirming the satisfactory condition of piping of transfer arms and, if necessary, leakage test is to be performed.
3. Transfer hoses are to be tested hydraulically to the maximum working pressure.

Section 4 Material

401. General

1. Selection and tests of materials used for piping, equipment and structure, etc. in contact with cryogenic liquids or gases are to be in accordance with **Ch 5, Sec 6** of the Rules taking into account the minimum design temperature.
2. Material other than those mention **Par. 1** is to be in accordance **Pt 2** of the Rules.

Section 5 Arrangements and Design of Bunkering Systems

501. Functional requirements

1. Bunkering systems are to be designed with suitable functionality for prevention, detection, control and mitigation of leakage of LNG and NG affecting the ship and personnel safety.
2. Systems are to be able to be drained, purged and inerted before connecting or disconnecting transfer systems.
3. Systems are to be designed to prevent from damage due to pressure increase in systems which may be isolated in a LNG full condition.
4. Substitution of systems required in this Annex with operational or procedural measures is not permitted.

502. Bunkering manifold area

1. The bunkering manifold area is to be located on the open deck so that sufficient natural ventilation is provided.
2. Drip trays are to be fitted below LNG bunkering connection and where leakage may occur in accordance with the followings.
   (1) Drip trays are to be made of suitable material for low temperatures.
   (2) The drip tray is to be thermally insulated from the ship's structure so that the surrounding hull or deck structures are not exposed to unacceptable cooling, in case of leakage of liquid fuel.
   (3) The tray is to be fitted with a drain valve to enable rain water to be drained over the ship's side.

(4) The tray is to have a sufficient capacity to ensure that the maximum amount of spill according to the risk assessment can be handled.

3. A water distribution system is to be fitted in way of the hull under the bunker connections to provide a low-pressure water curtain for additional protection of the hull steel and the ship's side structure. This system is to be operated when cargo transfer is in progress.

4. The bunker connections are to be observable from the bunker operation control position by providing permanent watch or CCTV during the transfer.

503. Bunkering manifold

1. Bunkering manifold is fixed pipe assembly mounted onboard to which the bunkering system connects. For the transfer arm, fixed pipe assembly connected to swivel is regarded as the bunkering manifold. *(2022)*

2. Safe working load of the bunkering manifold is to be designed to withstand the external loads during bunkering operation.

3. Information about maximum safe working load of bunkering connection is to be detailed in the operation manuals and posted at the bunker station.

4. Connections for vapor return from the receiving ship are to be provided.

5. A manually operated stop valve and a remote operated shutdown valve in series, or a combined manually operated and remote valve, are to be fitted in every bunkering line including vapor line close to the manifold connecting point. The remote valve is to be operable from the control location for bunkering operations or another safe location.

6. All pipelines or components which may be isolated in a liquid full condition are to be protected with relief valves for thermal expansion and evaporation.

7. Manifold connections not being used for bunker transfer operations are to be blanked with blind flanges suitable for the design pressure.

504. Cargo tank loading

1. Cargo tanks of the bunkering ship are to be assessed for all partial loading conditions considering abortion of bunkering operation at any stage in case of emergency such that there are no operational limits on partial loading.

2. Where there are no operational limits on partial loading, such operational limits are subject to approval and are to be detailed in the operation manuals.

505. Vapor return systems

1. The ship assigned with VRS notation in accordance with **103. 2** is to be provided with arrangements for handling excess vapor to protect fuel tank of receiving ship from over pressure.
2. Vapor returned from the receiving ship may be handled by one of the following methods:
   (1) reliquefaction of vapors
   (2) thermal oxidation of vapors
   (3) pressure accumulation or
   (4) a combination of the above
3. The capacity of vapor return systems is to be sufficient for handling excess vapor returned from the receiving ship.
4. Reliquefaction plants and gas combustion units are to be in accordance with **Ch 5, 703.** and **704.** of the Rules.
5. Vapor return process piping is to be adequately separated from other cargo process piping to avoid over pressure of cargo system on the bunkering ship.
6. Control and monitoring of the vapor return system is to be integrated into the control and monitoring system of bunkering systems and to be capable of varying LNG delivery rates in consideration

of the monitored vapor return system parameters.

7. Calculations for the maximum vapor return flow rate, pressure and corresponding tank pressure management details, are to be submitted and summary information is to be detailed in the operation manuals.

506. Electrical insulation

1. Inter-vessel electrical isolation between the bunkering ship and the receiving ship is to be maintained during transfer to reduce high-energy sparks being produced by the electrical potential difference between the hulls.

2. Each transfer connection is to have insulation flange to maintain electrical isolation. Insulation flange shall have resistance of at least 1 kohm to limit current flow but less than 100 Mohm to dissipate static charge.

507. Bunker transfer systems

1. Transfer hoses

(1) Hoses are to be designed for a bursting pressure not less than five times the maximum working pressure.
(2) Material of hoses is to be compatible with the cargo and suitable for the cargo temperature.
(3) The overall hose length is to be sufficient to meet both storage and operation condition.
(4) Hoses for LNG transfer are to be protected from over pressure by relief valves fitted outboard manifold valve.
(5) In determining the size and length of the hoses to be used, the followings are to be considered
  (A) maximum allowable bend radius of the hose
  (B) horizontal distance between the ships
  (C) difference in fore and after alignment(manifold offset)
  (D) distance between the manifold and the ship's side
  (E) vertical and horizontal ship movement
  (F) relative change in freeboard between the ships
  (G) allowable flow rate and pressure drop
  (H) hose supporting and handling equipment

2. Hose supporting and handling equipments

(1) The bunkering ship is to fitted with equipment supporting hoses during the transfer and handling hoses after activation of emergency release coupling.
(2) Hose supporting and handling equipments are to be in accordance with **Pt 9, Ch 2** of the Rules.
(3) Hose supports or cradles are to be arranged in consideration of hose bend radius.

3. Transfer arms

(1) Transfer arms are to be designed in consideration of the followings.
  (A) acceleration forces acting on the transfer arm
  (B) permissible manifold loadings
  (C) arm working envelope
  (D) arm support arrangement in operation and storage condition
  (E) the effect of hull vibration on the arm
  (F) vertical and horizontal ship movement
  (G) allowable flow rate and pressure drop
(2) Piping is to be arranged to avoid excessive stresses due to thermal movement and from movements of the tank and hull structure.
(3) All piping supports are to be adequately designed so that stresses in the piping and the structure are within allowable limits for all attitudes and positions.

4. Emergency release systems are to be in accordance with **604.**.

508. Inerting systems

1. The bunkering ship is to have onboard source of suitable inert gas for inerting, purging of bunkering

lines.

2. Inert gas generators are to be in accordance with **Ch 5, 905.** of the Rules.

3. The inert gas used for purging of bunkering lines is to have dewpoint sufficiently low to eliminate risk of water condensate accumulation in the piping system.

4. Suitable arrangement to prevent back-flow of cargo vapor from cargo system into the inert gas system is to be provided in accordance with **Ch 5, 905. 4** of the Rules.

509. Communication systems

1. A communication system is to be provided between the bunkering facility and the receiving ship and be provided with back-up. This may be achieved by electric, fibre-optic or pneumatic links, or a combination of these systems.

2. The components of the communication system located in hazardous area are to be of certified safe type.

3. Where portable radios are used for voice communication, they are to be of certified safe type for hazardous area.

510. Mooring equipment

1. The bunkering ship is to be equipped with sufficient number of closed type fairleads for safe mooring to the receiving ship.

2. Reference is made to **OCIMF Mooring equipment guidelines**.

511. Drain

Means are to be provided to drain residual LNG in the bunkering systems to cargo tanks.

Section 6 Control, Monitoring and Safety Systems

601. General *(2022)*

1. Control, monitoring and safety Systems are to be provided to maintain operations within preset parameters for bunkering operations

2. Control of bunkering is to be possible from a safe location in regard to bunkering operations.

3. Safety function for parameter monitored during bunkering operation is to be in accordance with **Table 1**.

Table 1 Alarms and ESD actions during bunkering operation *(2022)*

Parameters	Alarm	Activation of ESD system
High level in the receiving tank	●[1]	●
Gas detection in an enclosed or semi enclosed manifold area at 30% LEL[2]	●	
Gas detection in an enclosed or semi enclosed manifold area at 60% LEL[2]		●
Gas detection in the ducting around the bunkering lines at 30% LEL	●	
Gas detection in the ducting around the bunkering lines at 60% LEL	●	●
Gas detection in enclosed cargo machinery spaces at 30% LEL[4]	●	
Gas detection in enclosed cargo machinery spaces at 60% LEL[4]	●	●
Manual or automatic activation of the emergency shutdown system	●	●
Manual or automatic activation of the emergency release system	●	●
Safe working envelope of the loading arm exceeded	●	●
Loss of motive power to ESD valves[3]	●	●

Note:
1) Signal need not indicate the event initiating ESD.
2) Alarm and ESD system are to be manually activated when LNG leakage is observed at open manifold area.
3) ESD valves are to be fail closed type.
4) For cargo machinery spaces containing machinery used in bunkering operation.

602. Monitoring, alarm and control systems

1. Visible and audible alarms are to be provide on bunkering control station.

2. Alarms are to be activated in accordance with **601. 4, Table 1**.

3. Where transfer arms are used as transfer systems, in addition to **601. 4, Table 1**, the followings are to be complied with. *(2022)*

(1) For the hydraulic systems of the transfer arm, visible and audible alarms are to be activated in the following cases.
(A) low pressure in hydraulic accumulators;
(B) abnormal pressure in actuators chambers;
(C) low oil level in tank;
(D) low nitrogen pressure in accumulators.

4. For gas leakage detection during bunkering operation, permanently installed gas detection system is to be fitted in; *(2022)*

(1) enclosed or semi enclosed manifold area,
(2) ducting around the bunkering lines
(3) cargo machinery spaces containing machinery used in bunkering operation.

603. Emergency shutdown systems

1. ESD actions during bunkering operation is to be in accordance with **601. 4, Table 1**. Emergency shutdown system is to safely stop and isolate the bunker transfer between bunkering ship and receiving ship.

2. Activation of emergency shutdown system is to initiates the following:

(1) shut-down of cargo transfer pump and vapour return compressor
(2) closure of emergency shutdown valve; The closing time of the valve is to be considered so that the surge pressure in the transfer piping is not to be greater than allowable pressure.

3. A functional flow chart of the emergency shutdown system and related systems is to be provided at the bunkering control station and cargo control station or bridge, as applicable.

4. Activation of the emergency shutdown system is to be controllable from both bunkering ship and receiving ship.

5. Emergency shutdown systems of the bunkering ship and the receiving ship are to be linked to ensure the co-ordinated operation on both ships. This ESD link is to be fail-safe.

6. The bunkering system is not to be resumed until the transfer system and associated safety systems are returned to normal operation condition.

7. As a minimum, the emergency shutdown system is to be capable of manual operation in the followings.
   (1) bunkering control station
   (2) cargo control station
   (3) navigation bridge
   (4) at least two strategic positions around the bunker delivery area.

604. Emergency release systems *(2021)*

1. Emergency release systems are to be capable of rapidly and automatically disconnecting the transfer system from the ship to protect the transfer system when exceeding design loads in any direction. Vessel Separation Device is acceptable as means of activating emergency release systems. *(2022)*

2. Emergency release systems are to be composed with emergency release coupling and two self-closing shutoff valves and each valve is fitted at each side of the coupling to minimize cargo leakage when the coupling is activated.

3. Emergency release systems are to be controllable from bunkering ship. *(2022)*

4. Emergency release systems is to be of powered type and the actuating power is to have reserve storage of energy(e.g. hydraulic power source) sufficient for disconnection of all transfer lines in case the main source of actuating power becomes unavailable(e.g. in case of black-out) *(2022)*

5. Emergency release systems is to be capable to be activated manually on local location and at least two remote locations including bunker control station.

6. When initiation of the emergency release system is to result in the simultaneous closing of interlocking isolating valves of emergency release system, followed by the emergency release coupling separation, the followings are to be complied with to prevent hull and transfer system being damaged.
   (1) Where transfer arms are used, the disconnected arms are to retract behind the berthing line and shall lock hydraulically.
   (2) Where transfer hoses are used, the disconnected hoses are to be supported by cranes or other measures are to be taken to prevent hull and hose being damaged.

7. Manual or automatic activation of the emergency release system is to be inhibited without prior operation of the emergency shutdown system.

Section 7 Fire Protection and Fire Extinction

701. General

1. Water spray systems are to be installed at the bunkering manifold area in accordance with **Ch 5, 1103.** of the Rules.

2. Dry chemical powder fire-extinguishing systems is to be installed at the bunkering manifold area in accordance with **Ch 5, 1104.** of the Rules.

3. For vessels provided with additional cargo transfer equipment including transfer loading arms, bunkering booms, transfer hoses, reducers, spool pieces and transfer hoses reels, when in use, this additional cargo transfer equipment shall comply, where appropriate, with the requirements of **1103.1** (4), **1103.1** (5), **1104.1, 1104.3** and **1810.3** (2) of Rules for fire detection and fire protection in the cargo area (such as fusible elements, ESD functionality, water spray system protection, dry chemical powder fire-extinguishing systems and drip trays) including hull protection from low temperatures.

Section 8 Operational Requirements

801. General

1. Before any bunkering operation commences, a pre-bunkering operations meeting is to take place between the person in charge at the bunkering ship and the persons in charge at the receiving ship and they shall:
   (1) agree in writing the transfer procedure, including cooling down and if necessary, gassing up; the maximum transfer rate at all stages and volume to be transferred
   (2) agree in writing action to be taken in an emergency and
   (3) complete and sign the bunker checklist. Form and items of bunkering checklist are to be in accordance with **IAPH 'LNG Bunkering Checklist – Ship to Ship'**.
2. Effective communications are to be maintained throughout the operation.
3. Essential cargo handling controls and alarms are to be checked and tested prior to bunkering operations.

802. Operation manuals

1. The ship is to be provided with bunkering operation manuals approved by the Society.
2. The contents of bunkering operation manuals is to include:
   (1) preparation before the bunkering
   (2) information to be exchanged between bunkering vessel and receiving ship prior to operation
   (3) hose or arm handling guidelines
   (4) procedures for connection including line inerting and tightness test
   (5) preparations for start of bunkering including preparedness of fire-fighting, tightness testing, establishing communications, allocation of personnel and responsibilities
   (6) pre-cooling of transfer connections and transfer procedures
   (7) draining of the pipeline, purging and disconnection on completion of the transfer
   (8) operational restrictions to prevent dangerous pressure surge effect in the pipes
   (9) fire safety during the transfer
   (10 procedures for raising alarms
   (11) procedures in case of communications failure
   (12) suspension of operation during emergencies
   (13) procedures for authorization of ERS activation
   (14) emergency procedures for the followings:
      (A) gas fuel leakage
      (B) termination of the bunkering and emergency disconnection
      (C) response in case of unintentional disconnection of ERS
   (15) vapor return management plan
   (16) operational envelope of bunkering ship ⚓

Annex 7A-4 High manganese austenitic steel for Cryogenic Service 【See Rule】

Section 1 General

101. Scope

1. This Annex provides the designer and manufacturer with practical information on the design and construction of cargo tanks using high manganese austenitic steel for cryogenic service to comply with the Design Conditions defined in **Pt7, Chapter 5, 418**.

102. Application

1. This Annex are not intended to replace any requirements of **Pt7, Chapter 5**. They are intended as complementary guidelines on how to utilize high manganese austenitic steel in the design and fabrication of cargo tanks complying with the **Pt7, Chapter 5**.
2. High manganese austenitic steel for cryogenic service is used for only domestic voyage. When high manganese austenitic steel for cryogenic service is used for international voyage, it is to be approved by the relevant administration.
3. High manganese austenitic steel is applicable to cargo tanks such as Ammonia(anhydrous), Butane(all isomers), Butane-propane mixture, Carbon dioxide(High Purity and reclaimed quality), Ethane, Ethylene, Methane(LNG), Pentane(all isomers) or Propane.
4. The post-weld stress relief heat treatment referenced in Rules Part 7 Chapter 5, 1712.2.(2) is waived for ammonia cargo tanks.

103. Definitions

1. **Under-matched welds** means for welded connections where the weld metal has lower yield- or tensile-strength than the parent metal.

Section 2 Application

201. Design application

1. The relevant load conditions and design conditions should be established in accordance with **Pt7, Chapter 5, 418**. A guidance on special considerations to the high manganese austenitic steel is described beolw.
2. For the selection of relevant safety factors for high manganese austenitic steels(see **Pt7, Chapter 5, 421 to 423**), the safety factors specified for "Austenitic Steels" should be applied both for base material and for as welded condition

202. Ultimate design condition

1. It should be noted that high manganese austenitic steels normally have under-matched welds and, therefore, it is of great importance that the design values of the yield strength and tensile strength are based on the "minimum mechanical properties" for the base material and as welded condition. Note the limitation to under-matched welds defined in **Pt7, Chapter 5, 418.1.(3).(B)**.

203. Buckling strength

1. Buckling strength analysis should be carried out based on recognized standards. Functional loads as defined in **Pt7, Chapter 5, 403.4** should be considered. Note that design tolerances should be considered where relevant and be included in the strength assessment as required in **Pt7, Chapter 5,**

606.2.(1).

204. Fatigue design condition

1. The fatigue design curves for base material and for butt weld joint should use S-N curve of D grade in IIW.
2. The fatigue design curves for other weld joints except butt weld joint should be agreed with the Society.
3. Design S-N curve given in **Table 1** correspond to a probability of survival of 97.6%.

Table 1 S-N curves in air

S-N curve	$N \leq 10^7$ cycles		$N > 10^7$ cycles $\log \bar{a}_2$ $m_2 = 5.0$	Fatigue limit at 10^7 cycle(MPa)	Thickness exponent k
	m_1	$\log \bar{a}_1$			
D	3.0	12.164	15.606	52.63	0.20

205. Fracture mechanics analyses

1. For a cargo tank where a reduced secondary barrier is applied, fracture mechanics analysis should be carried out in accordance with **Pt7, Chapter 5**.
2. Fracture toughness properties should be expressed using recognized standards. Depending on the material, fracture toughness properties determined for loading rates similar to those expected in the tank system should be required. The fatigue crack propagation rate properties should be documented for the tank material and its welded joints for the relevant service conditions. These properties should be expressed using a recognized fracture mechanics practice relating the fatigue crack propagation rate to the variation in stress intensity, ΔK, at the crack tip. The effect of stresses produced by static loads should be taken into account when establishing the choice of fatigue crack propagation rate parameters.
3. Note that for the application where very high static load utilization is relevant, alternative methods such as ductile fracture mechanics analysis should be considered.
4. A fracture mechanics analysis is required for type B tank(**Pt7, Chapter 5, 422.4**) where a reduced secondary barrier is applied. Fracture mechanics analysis may also be required for other tank types as found relevant to show compliance with fatigue and crack propagation properties. Note that CTOD values used in fracture mechanics analysis may in any case be an important property to analyze to ensure that materials are considered suitable for the application.

206. Welding

1. Welding should be carried out in accordance with **Pt7, Chapter 5, 605**.
2. For welding the following points can be considered:
   (1) For reducing the heat input during production:
      (A) special attention should be given to the first root pass when applying flux-cored arc welding(FCAW); reduced amperage should be considered
      (B) welding heat input is to be equal to 30 kJ/cm or below
   (2) Distance between the weld and nozzle should be kept to a minimum to reduce the oxygen content at the vicinity of the weld pool
   (3) Weld gas composition of FCAW should normally be an 80/20 mix of argon and carbon dioxide and
   (4) Appropriate ventilation should be provided to reduce exposure to hazardous welding fumes.

207. Non-destructive testing(NDT)

1. The scope of non-destructive testing(NDT) should be as required by **Pt7, Chapter 5, 605.6**. NDT procedures should be in accordance with recognized standards to the satisfaction of the Society. For high manganese austenitic steel suitable NDT procedure normally applicable for austenitic steels should be used.

208. Corrosion resistance

1. High manganese austenitic steel is not considered a very strong corrosion resistant material in line with several similar materials such as 304 stainless steel Particularly for LNG cargo tanks that may not be in operation, appropriate environment should be maintained to prevent corrosion. ⚓

Annex 7A-5 Use of LPG Cargo as Fuel *(2025)* 【See Rule】

101. Application

1. This Annex apply to gas carriers as defined in SOLAS regulation VII/11.2 complying with the requirements of Ch 5 of the Rules using LPG cargoes as fuel, as a supplement to the existing provisions of Ch 5, Sec 16 of Rules.
2. LPG as provided in chapter 16 of the IGC Code, is composed of propane (C3H8), buta e (C4H10), or a propane-butane mixture as listed in Ch 19 of the Rules and may contain small amounts of other hydrocarbons and impurities. It can be in either a liquefied or gaseous state. LPG in the liquefied state is referred to as LPG liquid, and LPG in the gaseous state is referred to as LPG vapour.
3. A gas fuel consumer is any unit within the ship using cargo vapour or liquid as a fuel.
4. For LPG carriers fitted with dual-fuel diesel engines utilizing LPG cargo as fuel, the an additional installation notation of DFDE(LPG) may be assigned.

102. Goal

The goal of this Annex is to ensure safe and reliable distribution of fuel to the consumers and operation of consumers for use of LPG cargo as fuel.

103. Functional Requirements

1. Single failure is not to cause leakage into the space where LPG fuel consumers are installed.
2. Effectiveness of the ventilation and detection for LPG leakage is to be ensured taking into account characteristics of LPG.
3. Since LPG has different properties depending on the composition ratio of propane and butane, the composition ratio of fuel LPG is to be suitable for normal operation of the fuel consumer.
4. Fuel supply systems are design to be prevented unintended phase changes in processing of fuel supply to consumers considering vapour pressure at the working temperature as the followings;
   (1) Where fuel is supplied in the gaseous state, measures are to be taken so that the temperature of fuel is not lowered to the dew point at the working pressure.
   (2) Where fuel is supplied in the liquid state, measures are to be taken so that the pressure of fuel is not lowered to the vapour pressure at the working temperature.
5. Vent, purging and bleed lines of fuel supply systems are to be so designed as to prevent LPG liquid from being released to the atmosphere.

104. Supplementary requirements to the provisions of Ch. 16 of the Rules

See Ch. 16, 1601. to 1606. of Rules based on which the supplementary guidance has been provided for use of LPG cargo as fuel.

1. In accordance with the principles of 1609. of the Rules, LPG cargoes may be utilized in machinery spaces of category A. In these spaces, it may be utilized only in systems such as boilers, inert gas generators, internal combustion engines, gas combustion units and gas turbines.
2. The LPG fuel supply systems and LPG fuel consumers are to be designed for operation with the possible range of composition of the intended fuel. Information about the range of acceptable compositions is to be provided on board.
3. The fuel supply system is to comply with the requirements of 1604.1, 1604.2, 1604.3, and 1604.5 of the Rules.
4. LPG fuel consumers are to exhibit no external visible flame and are to maintain the uptake exhaust temperature sufficiently below the auto-ignition temperature of the fuel. In a mixture of gases, the component with the lowest auto-ignition temperature is to be the appropriate reference.

5. LPG vapour or liquid may be used as fuel in systems referenced in above Para 1.

6. Provision is to be made for inerting and venting to a safe location the gas fuel piping systems located in the machinery space. For permanent installations, the inert gas piping connected to the fuel piping is to be fitted with double block and bleed valves. In addition, a non-return valve is to be installed in the inert gas piping upstream of the double block and bleed valves. For liquid fuel supply systems, consideration is to be given to draining the piping without release of liquid to the atmosphere.

7. The supply and return piping of each gas consumer unit is to be provided with fuel isolation by automatic double block and bleed, vented to a safe location, under both normal and emergency operation. The automatic valves are to be arranged to fail to the closed position on loss of actuating power. In a space containing multiple consumers, the shutdown of one is not to affect the gas fuel supply to the others. For liquid fuel supply systems, the piping is to be drained without release of liquid to the atmosphere.

8. Gas nozzles and the burner control system are to be configured such that gas fuel can only be ignited by an established oil fuel flame, unless the boiler and combustion equipment is designed and approved by the Society to ignite on gas fuel.

105. Additional provisions

1. Risk assessment

(1) A risk assessment is to be conducted of the LPG fuel arrangements to document an equivalent level of safety to utilizing LNG as fuel. Consideration is to be given to the hazards associated with the arrangement, operation and maintenance of the fuel system, considering reasonably foreseeable failures.

(2) The risk assessment is to address the consequences of fuel leakage, considering the properties of LPG gas and its accumulation or escape into another space.

2. Arrangements of spaces containing gas fuel consumers

(1) A single failure of fuel systems in the machinery space is not to lead to a gas release in the machinery space. Fuel piping is to be of double wall design or ducted and the outer boundary is to be continuous in the space. Non-continuous double barriers is not to be used under the circumstances described in Ch 5, 1604.6 (2) of Rules.

(2) The air inlet of the annular space is not to be in the machinery space. In addition, the air inlet of the annular space is to be in a location which would be safe in the absence of the air inlet. Consideration is to be given to the risk of liquid carry-over resulting from a liquid leak.

3. Fuel supply

(1) Where fuel supply systems supply LPG liquid, vent and purging is to lead to a fuel tank, gas-liquid separator or similar device. Heating of the gas-liquid separator may be required for ships operating in cold areas.

(2) Fuel supply systems referenced in above (1) and vent masts are to be fitted with an inert gas purging interface and are to include a means for preventing condensation of vapour in the system.

(3) In application of Ch 5, 1604.3 (2) of Rules, the ventilation inlets for the double wall piping and ducts is to be in a non-hazardous area, away from ignition sources. Ventilation outlets for the double wall piping and ducts is to be in the cargo area.

4. Fuel plant ventilation and gas detection

(1) In addition to the requirements of Ch 5, 1603.1 and 1605.1 of Rules, special consideration is to be given to the density and lower explosion limit (LEL) of LPG vapour. Ventilation capacity, including ventilation inlet and outlet location, is to be supported by numerical calculations, such as a computational fluid dynamics (CFD) analysis. Notwithstanding, for spaces within the cargo area, on the open deck and containing LPG fuel conditioning equipment, the requirements of Ch 5, 1201.3 of Rules are to apply.

(2) In addition to the requirements of Ch 5, 1306.12 of Rules, gas detection heads are to be fitted in spaces where LPG vapour may accumulate particularly where air circulation is reduced or near the bottom of the space. The suitability of their location is to be supported by numerical calculations, such as a CFD analysis or physical smoke test.

5. Combustion equipment

(1) Gas fuel consumer exhaust gas temperature is to be continuously monitored.

(2) Gas turbines are to be fitted with a gas-tight enclosure unless fuel supply piping meets the requirements of **Ch 5, 1604. 3** of **Rules.** The consequences of gas leakage are to be evaluated based on the risk assessment in **105. 1.** ⚓

Annex 7A-6 Non-Metallic Materials(IGC Code Appendix 4)

【See Rule】

101. General

1. The Annex is in addition to the requirements of **Ch 5, 419** of the Rules, where applicable to non-metallic materials.
2. The manufacture, testing, inspection and documentation of non-metallic materials should in general comply with recognized standards, and with the specific requirements of this Annex, as applicable.
3. When selecting a non-metallic material, the designer should ensure that it has properties appropriate to the analysis and specification of the system requirements. A material can be selected to fulfil one or more requirements.
4. A wide range of non-metallic materials may be considered. Therefore, the section below on material selection criteria cannot cover every eventuality and should be considered as guidance.

102. Material selection criteria

1. Non-metallic materials may be selected for use in various parts of liquefied gas carrier cargo systems based on consideration of the following basic properties:
   (1) insulation - the ability to limit heat flow
   (2) load bearing - the ability to contribute to the strength of the containment system
   (3) tightness - the ability to provide liquid and vapour tight barriers
   (4) joining - the ability to be joined (for example by bonding, welding or fastening).
2. Additional considerations may apply depending on the specific system design.

103. Properties of materials

1. Flexibility of insulating material is the ability of an insulating material to be bent or shaped easily without damage or breakage.
2. Loose fill material is a homogeneous solid generally in the form of fine particles, such as a powder or beads, normally used to fill the voids in an inaccessible space to provide an effective insulation.
3. Nano-material is a material with properties derived from its specific microscopic structure.
4. Cellular material is a material type containing cells that are either open, closed or both and which are dispersed throughout its mass.
5. Adhesive material is a product that joins or bonds two adjacent surfaces together by an adhesive process.
6. Other materials are materials that are not characterized in this Annex and should be identified and listed. The relevant tests used to evaluate the suitability of material for use in the cargo system should be identified and documented.

104. Material selection and testing requirements

1. Material specification

(1) When the initial selection of a material has been made, tests should be conducted to validate the suitability of this material for the use intended.
(2) The material used should clearly be identified and the relevant tests should be fully documented.
(3) Materials should be selected according to their intended use. They should:
   (A) be compatible with all the products that may be carried
   (B) not be contaminated by any cargo nor react with it
   (C) not have any characteristics or properties affected by the cargo and
   (D) be capable to withstand thermal shocks within the operating temperature range.

2. Material testing

The tests required for a particular material depend on the design analysis, specification and intended duty. The list of tests below is for illustration. Any additional tests required, for example in respect of sliding, damping and galvanic insulation, should be identified clearly and documented. Materials selected according to **1.** of this Annex should be tested further according to the following **Table 1.1**:

Table 1.1

Function	Insulation	Load bearing structural	Tightness	Joining
Mechanical tests		V	V	V
Tightness tests			V	
Thermal tests	V			

Thermal shock testing should submit the material and/or assembly to the most extreme thermal gradient it will experience when in service.

(1) Inherent properties of materials
  (A) Tests should be carried out to ensure that the inherent properties of the material selected will not have any negative impact in respect of the use intended.
  (B) For all selected materials, the following properties should be evaluated:
    (a) density; example standard **ISO 845** and
    (b) linear coefficient of thermal expansion (LCTE); example standard **ISO 11359** across the widest specified operating temperature range. However, for loose fill material the volumetric coefficient of thermal expansion (VCTE) should be evaluated, as this is more relevant.
  (C) Irrespective of its inherent properties and intended duty, all materials selected should be tested for the design service temperature range down to 5°C below the minimum design temperature, but not lower than -196°C.
  (D) Each property evaluation test should be performed in accordance with recognized standards. Where there are no such standards, the test procedure proposed should be fully detailed and submitted to the Society for acceptance. Sampling should be sufficient to ensure a true representation of the properties of the material selected.
(2) Mechanical tests
  (A) The mechanical tests should be performed in accordance with the following **Table 1.2**.

Table 1.2

Mechanical tests	Load bearing structural
Tensile	ISO 527 ISO 1421 ISO 3346 ISO 1926
Shearing	ISO 4587 ISO 3347 ISO 1922 ISO 6237
Compressive	ISO 604 ISO 844 ISO 3132
Bending	ISO 3133 ISO 14679
Creep	ISO 7850

(B) If the chosen function for a material relies on particular properties such as tensile, compressive and shear strength, yield stress, modulus or elongation, these properties should be tested to a recognized standard. If the properties required are assessed by numerical simulation according to a high order behaviour law, the testing should be performed to the satisfaction of the Society.

(C) Creep may be caused by sustained loads, for example cargo pressure or structural loads. Creep testing should be conducted based on the loads expected to be encountered during the design life of the containment system.

(3) Tightness tests

(A) The tightness requirement for the material should relate to its operational functionality.

(B) Tightness tests should be conducted to give a measurement of the material's permeability in the configuration corresponding to the application envisaged (e.g. thickness and stress conditions) using the fluid to be retained (e.g. cargo, water vapour or trace gas).

(C) The tightness tests should be based on the tests indicated as examples in the following **Table 1.3**.

Table 1.3

Tightness tests	Tightness
Porosity/Permeability	ISO 15106 ISO 2528 ISO 2782

(4) Thermal conductivity tests

(A) Thermal conductivity tests should be representative of the lifecycle of the insulation material so its properties over the design life of the cargo system can be assessed. If these properties are likely to deteriorate over time, the material should be aged as best possible in an environment corresponding to its lifecycle, for example operating temperature, light, vapour and installation (e.g. packaging, bags, boxes, etc.).

(B) Requirements for the absolute value and acceptable range of thermal conductivity and heat capacity should be chosen taking into account the effect on the operational efficiency of the cargo containment system. Particular attention should also be paid to the sizing of the associated cargo handling system and components such as safety relief valves plus vapour return and handling equipment.

(C) Thermal tests should be based on the tests indicated as examples in the following **Table 1.4** or their equivalents:

Table 1.4

Thermal tests	Insulation
Thermal conductivity	ISO 8301 ISO 8302
Heat capacity	V

(5) Physical tests

(A) In addition to the requirements of **419. 2.** (3) and **419. 3.** (2) of the Rule, the following **Table 1.5** provides guidance and information on some of the additional physical tests that may be considered.

(B) Requirements for loose fill material segregation should be chosen considering its potential adverse effect on the material properties (density, thermal conductivity) when subjected to environmental variations such as thermal cycling and vibration.

(C) Requirements for a material with closed cell structures should be based on its eventual impact on gas flow and buffering capacity during transient thermal phases.

(D) Similarly, adsorption and absorption requirements should take into account the potential adverse effect an uncontrolled buffering of liquid or gas may have on the system.

Table 1.5

Physical tests	Flexible insulating	Loose fill	Nano-material	Cellular	Adhesive
Particle size		V			
Closed cells content				ISO 4590	
Absorption/Desorption	ISO 12571	V	V	ISO 2896	
Viscosity					ISO 2555 ISO 2431
Open time					ISO 10364
Thixotropic properties					V
Hardness					ISO 868

105. Quality assurance and quality control (QA/QC)

1. General

(1) Once a material has been selected, after testing as outlined in **104.**, a detailed quality assurance/quality control(QA/QC) programme should be applied to ensure the continued conformity of the material during installation and service. This programme should consider the material starting from the manufacturer's quality manual(QM) and then follow it throughout the construction of the cargo system.

(2) The QA/QC programme should include the procedure for fabrication, storage, handling and preventive actions to guard against exposure of a material to harmful effects. These may include, for example, the effect of sunlight on some insulation materials or the contamination of material surfaces by contact with personal products such as hand creams. The sampling methods and the frequency of testing in the QA/QC programme should be specified to ensure the continued conformity of the material selected throughout its production and installation.

(3) Where powder or granulated insulation is produced, arrangements should be made to prevent compacting of the material due to vibrations.

2. QA/QC during component manufacture

The QA/QC programme in respect of component manufacture should include, as a minimum but not limited to, the following items.

(1) Component identification

(A) For each material, the manufacturer should implement a marking system to clearly identify the production batch. The marking system should not interfere, in any way, with the properties of the product.

(B) The marking system should ensure complete traceability of the component and should include:

(a) date of production and potential expiry date

(b) manufacturer's references

(c) reference specification

(d) reference order

(e) when necessary, any potential environmental parameters to be maintained during transportation and storage

(2) Production sampling and audit method

(A) Regular sampling is required during production to ensure the quality level and continued conformity of a selected material.

(B) The frequency, the method and the tests to be performed should be defined in QA/QC programme; for example, these tests will usually cover, inter alia, raw materials, process param-

eters and component checks.
(C) Process parameters and results of the production QC tests should be in strict accordance with those detailed in the QM for the material selected.
(D) The objective of the audit method as described in the QM is to control the repeatability of the process and the efficacy of the QA/QC programme.
(E) During auditing, auditors should be provided with free access to all production and QC areas. Audit results should be in accordance with the values and tolerances as stated in the relevant QM.

106. Bonding and joining process requirement and testing

1. Bonding procedure qualification

(1) The bonding procedure specification and qualification test should be defined in accordance with recognized standards.
(2) The bonding procedures should be fully documented before work commences to ensure the properties of the bond are acceptable.
(3) The following parameters should be considered when developing a bonding procedure specification:
(A) surface preparation
(B) materials storage and handling prior to installation
(C) covering-time
(D) open-time
(E) mixing ratio, deposited quantity
(F) environmental parameters (temperature, humidity)
(G) curing pressure, temperature and time
(4) Additional requirements may be included as necessary to ensure acceptable results.
(5) The bonding procedures specification should be validated by an appropriate procedure qualification testing programme.

2. Personnel qualifications

(1) Personnel involved in bonding processes should be trained and qualified to recognized standards.
(2) Regular tests should be made to ensure the continued performance of people carrying out bonding operations to ensure a consistent quality of bonding.

107. Production bonding tests and controls

1. Destructive testing

During production, representative samples should be taken and tested to check that they correspond to the required level of strength as required for the design.

2. Non-destructive testing

(1) During production, tests which are not detrimental to bond integrity should be performed using an appropriate technique such as:
(A) visual examination;
(B) internal defects detection (for example acoustic, ultrasonic or shear test); and
(C) local tightness testing.
(2) If the bonds have to provide tightness as part of their design function, a global tightness test of the cargo containment system should be completed after the end of the erection in accordance with the designer's and QA/QC programme.
(3) The QA/QC standards should include acceptance standards for the tightness of the bonded components when built and during the lifecycle of the containment system. ⚓

Annex 7A-7 Standard for the Use of Limit State Methodologies in the Design of Cargo Containment Systems of Novel Configuration(IGC Code Appendix 5) 【See Rule】

101. General

1. The purpose of this standard is to provide procedures and relevant design parameters of limit state design of cargo containment systems of a novel configuration in accordance with **Ch 5, 427.** of the Rule.

2. Limit state design is a systematic approach where each structural element is evaluated with respect to possible failure modes related to the design conditions identified in **Ch 5, 403. 4** of the Rule. A limit state can be defined as a condition beyond which the structure, or part of a structure, no longer satisfies the requirements.

3. The limit states are divided into the three following categories:
   (1) Ultimate Limit States (ULS), which correspond to the maximum load carrying capacity or, in some cases, to the maximum applicable strain, deformation or instability in structure resulting from buckling and plastic collapse; under intact (undamaged) conditions;
   (2) Fatigue Limit States (FLS), which correspond to degradation due to the effect of cyclic loading; and
   (3) Accident Limit States (ALS), which concern the ability of the structure to resist accident situations.

4. **Ch 5, 401.** through to **420.** of the Rule are to be complied with as applicable depending on the cargo containment system concept.

102. Design format

1. The design format in this standard is based on a Load and Resistance Factor Design format. The fundamental principle of the Load and Resistance Factor Design format is to verify that design load effects, L_d, do not exceed design resistances, R_d, for any of the considered failure modes in any scenario:

$$L_d \leq R_d$$

(1) A design load F_{dk} is obtained by multiplying the characteristic load by a load factor relevant for the given load category:

$$F_{dk} = \gamma_f \cdot F_k$$

where:

γ_f : load factor; and

F_k : the characteristic load as specified in **Ch 5, 411.** through to **418.** of the Rule

A design load effect L_d (e.g. stresses, strains, displacements and vibrations) is the most unfavorable combined load effect derived from the design loads, and may be expressed by:

$$L_d = q(F_{d1}, F_{d2}, \cdots, F_{dN})$$

where

q : the functional relationship between load and load effect determined by structural analysis.

(2) The design resistance R_d is determined as follows:

$$R_d = \frac{R_k}{\gamma_R \cdot \gamma_C}$$

where:

R_k : the characteristic resistance. In case of materials covered by **Ch 5 Sec 6** of the Rule, it may be, but not limited to, specified minimum yield stress, specified minimum tensile strength, plastic resistance of cross sections, and ultimate buckling strength

γ_R : the resistance factor, which is determined as follows;

$$\gamma_R = \gamma_m \cdot \gamma_s$$

where

γ_m : the partial resistance factor to take account of the probabilistic distribution of the material properties(material factor)

γ_s : the partial resistance factor to take account of the uncertainties on the capacity of the structure, such as the quality of the construction, method considered for determination of the capacity including accuracy of analysis

γ_C : the consequence class factor, which accounts for the potential results of failure with regard to release of cargo and possible human injury.

2. Cargo containment design is to take into account potential failure consequences. Consequence classes are defined in **Table 1.1**, to specify the consequences of failure when the mode of failure is related to the Ultimate Limit State, the Fatigue Limit State, or the Accident Limit State.

Table 1.1 Consequence classes

Consequence class	Definition
Low	Failure implies minor release of the cargo.
Medium	Failure implies release of cargo and potential for human injury.
High	Failure implies significant release of the cargo and high potential for human injury /fatality

103. Required analyses

1. Three-dimensional finite element analyses are to be carried out as an integrated model of the tank and the ship hull, including supports and keying system as applicable. All the failure modes are to be identified to avoid unexpected failures. Hydrodynamic analyses are to be carried out to determine the particular ship accelerations and motions in irregular waves, and the response of the ship and its cargo containment systems to these forces and motions.

2. Buckling strength analyses of cargo tanks subject to external pressure and other loads causing compressive stresses are to be carried out in accordance with recognized standards. The method is to adequately account for the difference in theoretical and actual buckling stress as a result of plate out of flatness, plate edge misalignment, straightness, ovality and deviation from true circular form over a specified arc or chord length, as relevant.

3. Fatigue and crack propagation analysis is to be carried out in accordance with **105. 1**.

104. Ultimate limit states

1. Structural resistance may be established by testing or by complete analysis taking account of both elastic and plastic material properties. Safety margins for ultimate strength are to be introduced by partial factors of safety taking account of the contribution of stochastic nature of loads and resistance (dynamic loads, pressure loads, gravity loads, material strength, and buckling capacities).

2. Appropriate combinations of permanent loads, functional loads and environmental loads including sloshing loads are to be considered in the analysis. At least two load combinations with partial load factors as given in **Table 1.2** are to be used for the assessment of the ultimate limit states.

Table 1.2 Partial load factors

Load combination	Permanent loads	Functional loads	Environmental loads
'a'	1.1	1.1	0.7
'b'	1.0	1.0	1.3

The load factors for permanent and functional loads in load combination 'a' are relevant for the normally well-controlled and/or specified loads applicable to cargo containment systems such as vapour pressure, cargo weight, system self-weight, etc. Higher load factors may be relevant for permanent and functional loads where the inherent variability and/or uncertainties in the prediction models are higher.

3. For sloshing loads, depending on the reliability of the estimation method, a larger load factor may be required by the Society.

4. In cases where structural failure of the cargo containment system are considered to imply high potential for human injury and significant release of cargo, the consequence class factor is to be taken as γ_C = 1.2. This value may be reduced if it is justified through risk analysis and subject to the approval by the Society. The risk analysis is to take account of factors including, but not limited to, provision of complete or partial secondary barrier to protect hull structure from the leakage and less hazards associated with intended cargo. Conversely, higher values may be fixed by the Society, for example, for ships carrying more hazardous or higher pressure cargo. The consequence class factor is to in any case not be less than 1.0.

5. The load factors and the resistance factors used are to be such that the level of safety is equivalent to that of the cargo containment systems as described in sections **Ch 5, 421.** to **426.** of the Rule. This may be carried out by calibrating the factors against known successful designs.

6. The material factor γ_m is to in general reflect the statistical distribution of the mechanical properties of the material, and needs to be interpreted in combination with the specified characteristic mechanical properties. For the materials defined in **Ch 5 Sec 6** of the Rule, the material factor γ_m may be taken as:

1.1 when the characteristic mechanical properties specified by the Society typically represents the lower 2.5% quantile in the statistical distribution of the mechanical properties; or

1.0 when the characteristic mechanical properties specified by the Society represents a sufficiently small quantile such that the probability of lower mechanical properties than specified is extremely low and can be neglected.

7. The partial resistance factors γ_{si} are to in general be established based on the uncertainties in the capacity of the structure considering construction tolerances, quality of construction, the accuracy of the analysis method applied, etc.

(1) For design against excessive plastic deformation using the limit state criteria given in **8**, the partial resistance factors γ_{si} are to be taken as follows:

$$\gamma_{s1} = 0.76 \cdot \frac{B}{x1}$$

$$\gamma_{s2} = 0.76 \cdot \frac{D}{x2}$$

$$x_1 = Min\left(\frac{R_m}{R_e} \cdot \frac{B}{A}; 1.0\right)$$

$$x_2 = Min\left(\frac{R_m}{R_e} \cdot \frac{D}{C}; 1.0\right)$$

where

A, B, C and D = defined in **Ch 5, 422. 3** (1) of the Rule.

R_m and R_e = defined in **Ch 5, 418. 1** (3) of the Rule.

The partial resistance factors given above are the results of calibration to conventional type B independent tanks.

8. Design against excessive plastic deformation

(1) Stress acceptance criteria given below refer to elastic stress analyses.

(2) Parts of cargo containment systems where loads are primarily carried by membrane response in the structure are to satisfy the following limit state criteria:

$$\sigma_m \leq f$$
$$\sigma_L \leq 1.5f$$
$$\sigma_b \leq 1.5F$$
$$\sigma_L + \sigma_b \leq 1.5F$$
$$\sigma_m + \sigma_b \leq 1.5F$$
$$\sigma_m + \sigma_b + \sigma_g \leq 3.0F$$
$$\sigma_L + \sigma_b + \sigma_g \leq 3.0F$$

where:

σ_m : equivalent primary general membrane stress

σ_L : equivalent primary local membrane stress

σ_b : equivalent primary bending stress

σ_g : equivalent secondary stress

$$f = \frac{R_e}{\gamma_{s1} \cdot \gamma_m \cdot \gamma_c}$$

$$F = \frac{R_e}{\gamma_{s2} \cdot \gamma_m \cdot \gamma_c}$$

The stress summation described above is to be carried out by summing up each stress component (σ_x, σ_y, τ_{xy}), and subsequently the equivalent stress is to be calculated based on the resulting stress components as shown in the example below.

$$\sigma_L + \sigma_b = \sqrt{(\sigma_{Lx} + \sigma_{bx})^2 - (\sigma_{Lx} + \sigma_{bx})(\sigma_{Ly} + \sigma_{by}) + (\sigma_{Ly} + \sigma_{by})^2 + 3(\tau_{Lxy} + \tau_{bxy})^2}$$

(3) Parts of cargo containment systems where loads are primarily carried by bending of girders, stiffeners and plates, are to satisfy the following limit state criteria:

$$\sigma_{ms} + \sigma_{bp} \leq 1.25F \quad \text{(See notes 1,2)}$$
$$\sigma_{ms} + \sigma_{bp} + \sigma_{bs} \leq 1.25F \quad \text{(See note 2)}$$
$$\sigma_{ms} + \sigma_{bp} + \sigma_{bs} + \sigma_{bt} + \sigma_g \leq 3.0F$$

where:

σ_{ms} : equivalent section membrane stress in primary structure

σ_{bp} : equivalent membrane stress in primary structure and stress in secondary and tertiary structure caused by bending of primary structure

σ_{bs} : section bending stress in secondary structure and stress in tertiary structure caused by bending of secondary structure

σ_{bt} : section bending stress in tertiary structure

σ_g : equivalent secondary stress

$$F = \frac{R_e}{\gamma_{s2} \cdot \gamma_m \cdot \gamma_c}$$

σ_{ms}, σ_{bp}, σ_{bs} and σ_{bt} = defined in (4).

Note 1: The sum of equivalent section membrane stress and equivalent membrane stress in primary structure ($\sigma_{ms}+\sigma_{bp}$) will normally be directly available from three-dimensional finite element analyses.

Note 2: The coefficient, 1.25, may be modified by the Society considering the design concept, configuration of the structure, and the methodology used for calculation of stresses.

Skin plates are to be designed in accordance with the requirements of the Society. When membrane stress is significant, the effect of the membrane stress on the plate bending capacity shall be appropriately considered in addition.

(4) Section stress categories
(A) Normal stress is the component of stress normal to the plane of reference.
(B) Equivalent section membrane stress is the component of the normal stress that is uniformly distributed and equal to the average value of the stress across the cross section of the structure under consideration. If this is a simple shell section, the section membrane stress is identical to the membrane stress defined in (2).
(C) Section bending stress is the component of the normal stress that is linearly distributed over a structural section exposed to bending action, as illustrated in **Fig 1.1**.

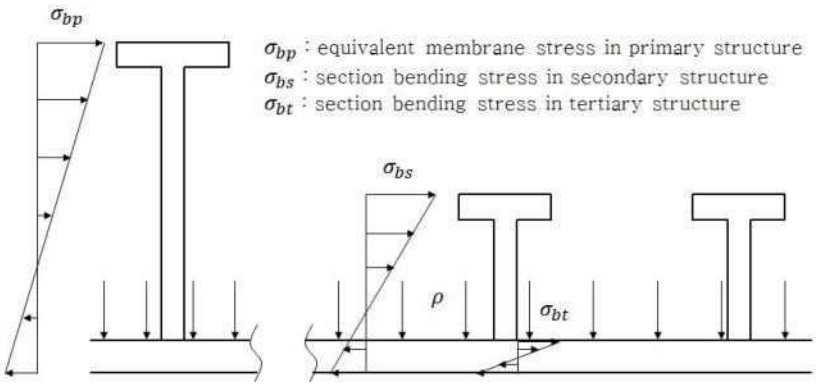

Fig 1.1: Definition of the three categories of section stress (Stresses σ_{bp} and σ_{bs} are normal to the cross section shown.)

9. The same factors γ_C, γ_m, γ_{si} shall be used for design against buckling unless otherwise stated in the applied recognized buckling standard. In any case the overall level of safety shall not be less than given by these factors.

105. Fatigue limit states

1. Fatigue design condition as described in **Ch 5, 418. 2** of the Rule shall be complied with as applicable depending on the cargo containment system concept. Fatigue analysis is required for the cargo containment system designed under **Ch 5 427.** and this standard.

2. The load factors for fatigue limit states shall be taken as 1.0 for all load categories.

3. Consequence class factor γ_C and resistance factor γ_R shall be taken as 1.0.

4. Fatigue damage shall be calculated as described in **Ch 5, 418. 2** (2) to (5) of the Rule. The

calculated cumulative fatigue damage ratio for the cargo containment systems shall be less than or equal to the values given in **Table 1.3**.

Table 1.3 Maximum allowable cumulative fatigue damage ratio

	Consequence class		
C_W	Low	Medium	High
	1.0	0.5	0.5*
* Lower value shall be used in accordance with **Ch 5, 418. 2** (7) to (9) of the Rule, depending on the detectability of defect or crack, etc.			

5. Lower values may be fixed by the Society.

6. Crack propagation analyses are required in accordance with **Ch 5, 418. 2** (6) to (9) of the Rule.

106. Accident Limit States

1. Accident design condition as described in **Ch 5, 418. 3** of the Rule is to be complied with as applicable, depending on the cargo containment system concept.

2. Load and resistance factors may be relaxed compared to the ultimate limit state considering that damages and deformations can be accepted as long as this does not escalate the accident scenario.

3. The load factors for accident limit states are to be taken as 1.0 for permanent loads, functional loads and environmental loads.

4. Loads mentioned in **Ch 5, 413. 9** and **415.1** of th Rule need not be combined with each other or with environmental loads, as defined in **Ch 5, 414.** of the Rule.

5. Resistance factor γ_R is to in general be taken as 1.0.

6. Consequence class factors γ_C are to in general be taken as defined in **104. 4** of this standard, but may be relaxed considering the nature of the accident scenario.

7. The characteristic resistance R_k is to in general be taken as for the ultimate limit state, but may be relaxed considering the nature of the accident scenario.

8. Additional relevant accident scenarios are to be determined based on a risk analysis.

107. Testing

1. Cargo containment systems designed according to this standard are to be tested to the same extent as described in **Ch 5, 420. 3** as applicable depending on the cargo containment system concept. ⚓

Annex 7A-8 Guidelines for Safety Margin of Cargo Containment System 【See Rule】

CHAPTER 1 GENERAL

Section 1 Application

101. Application

This Guidelines regulates the safety margin of each cargo containment system for the ultimate, accidental and fatigue design conditions.

102. Application of design conditions

The cargo containment system structural strength shall be assessed against failure modes, including but not limited to plastic deformation, buckling and fatigue. Cargo containment systems shall be designed with safety margins as following three design conditions:

(1) to withstand ultimate design conditions for full and partial loading under the all functional and environmental conditions considering static loads, sloshing, thermal effect and hull's behaviour according to **411.** and **418. 1, Sec 4, Ch 5, Rules**,

(2) to withstand accidental conditions for collision and flooding causing buoyancy on tank according to **415.** and **418. 3, Sec 4, Ch 5, Rules** and

(3) to survive fatigue design conditions - the cargo containment system structure and its structural components shall not fail under accumulated cyclic loading according to **418. 2, Sec 4, Ch 5, Rules**.

103. Uncertainties in loads

Uncertain loads are mainly environmental loads in comparison with permanent load(ex: gravity) and functional loads(ex: pressure, thermally induced load, cargo weight and installation load, etc). The governing load in environmental loads is sloshing load due to ship motion and accelerations based on North Atlantic environmental conditions and relevant long-term sea state scatter diagrams for unrestricted navigation. When lesser or greater environmental conditions than North Atlantic environment is required, *a* or *b* load combination factor defined in **605.** (2), **Sec 6, Ch 2** in this Guidelines can be applied as safety margin of loads.

104. Structural model and criteria

1. Finite element model

The structural model using a finite element model shall have relevant element density for that the structural response is well confined within the interior of the model. The structural analysis shall be carried out in accordance with **417, Sec 4 Ch 5, Rules.**

2. Yielding criteria

Safety margin for ultimate and accidental design conditions shall be defined based on R_e and R_m as below;

R_e : specified minimum yield stress at room temperature($\mathrm{N/mm^2}$)

R_m : specified minimum tensile strength at room temperature($\mathrm{N-mm}$)

3. Fatigue damage criteria

The cumulative fatigue damage shall be calculated for low cyclic load(ex: loading and unloading) and for high cyclic load(ex: wave encounters in North-Atlantic sea, not less than 10^8). Safety margin for fatigue design conditions shall be defined based on C_W define as below;

$$\sum \frac{n_i}{N_i} + \frac{n_{Loading}}{N_{Loading}} \leq C_W$$

where:

n_i : number of stress cycles at each stress level during the life of the tank;

N_i : number of cycles to fracture for the respective stress level according to S-N curve;

$n_{Loading}$: number of loading and unloading cycles during the life of the tank, not to be less than 1000 for 20 years and 2000 for 40 years. Loading and unloading cycles include a complete pressure and thermal cycle;

$N_{Loading}$: number of cycles to fracture for the fatigue loads due to loading and unloading; and

C_W : maximum allowable cumulative fatigue damage ratio.

105. Corrosion allowances

Except for tanks carrying cargoes containing considerable amounts of impurities or corrosive substances such as chlorine and sulfur dioxide, no corrosion allowance may be required for aluminum alloys and stainless steel. The pressure vessels in independent tanks type C shall have corrosion allowance described in **423. 2.** (1), **Sec 4, Ch 5, Rules**. Where the piping system in cargo containment system is constructed by carbon-manganese steel, corrosion allowance shall be applied according to **511. Sec 5, Ch 5, Rules.**

106. Thermal Effects

1. Thermal insulation

Thermal insulation shall be provided, as required, to protect the hull from temperatures below those allowable temperature (see **419. 1. Sec 4, Ch 5, Rules**) and limit the heat flux into the tank to the levels that can be maintained by the pressure and temperature control system applied in **Sec 7, Ch 5, Rules**.

2. Thermally induced loads

Transient thermally induced loads during cooling down periods shall be considered for tanks intended for cargo temperatures below -55°C. Stationary thermally induced loads shall be considered for cargo containment systems where the design supporting arrangements or attachments and operating temperature may give rise to significant thermal stresses (see **702. Sec 7, Ch 5, Rules**).

107. Material for ageing and variability

Material properties shall be certificated by Society through the material experiments based on the procedure of **419, Sec 4. Ch 5, Rules** and international standard. Test items for insulation materials relating international standard is shown **Table 7.5.4, Ch 5, Guidance**. For ageing of material, testing for thermal conductivity of thermal insulation shall be carried out on suitably aged samples.

108. Construction tolerance

Metallic materials shall be satisfied for tensile, toughness and bend test requirements and the construction requirements under design temperature defined in **603.** and **604. Sec 6, Ch 5, Rules**. Inspection and non-destructive testing of welds shall be in accordance with the requirements of **605. Sec 6, Ch 5, Rules**. For type C tanks and type B tanks primarily constructed of bodies of revolution, the tolerances relating to manufacture, such as out-of-roundness, local deviations from the true form, welded joints alignment and tapering of plates having different thicknesses, shall comply with standards recognized by Society. The tolerances shall also be related to initial imperfection in the buckling analysis referred to in **422** and **423. Sec 4, Ch 5, Rules.**

109. Cargo containment systems

The specific safety margins of resistance capacity for each cargo containment system are as below;

- Type A independent tank, refe to **Sec 1, Ch 2**,
- Type B independent tank, refe to **Sec 2, Ch 2**,
- Type C independent tank, refe to **Sec 3, Ch 2**,

- Membrane type tank, refe to **Sec 4, Ch 2**,
- Integral tank and semi-membrane tank, **Sec 5, Ch 2**,
- Noble configuration system, refe to **Sec 6, Ch 2**.

CHAPTER 2 SAFETY MARGIN

Section 1 Type A Independent Tanks

101. Allowable stress for ultimate and accidental design conditions *(2023)*

The allowable nominal membrane stress for primary(web frames, stringers and girders) and secondary members(stiffeners) shall not exceed a lesser of 0.75 R_e (= 1/1.33 R_e) or 0.37 R_m (=1/2.66 R_m) for nickel steels, carbon-manganese steels, austenitic steels and aluminium alloys. The allowable equivalent stress, σ_c for plating (refer to **418. 1.** (4) **Sec 4, Ch 5 Rules)** shall not exceed a 0.83R_e (= 1/1.2 R_e).

102. Buckling utilization factor for ultimate and accidental design conditions

Buckling assessment for finite element analyses of cargo tanks subject to external pressure and other loads causing compressive stresses shall be carried out in accordance with **Ch 8, Rules Pt 13**. The utilization factor for the combination of all static and dynamic loads shall be less than 0.9 for ultimate design condition and 1.0 for accidental design condition.

103. Allowable cumulative fatigue damage ratio

For type A tanks allowable cumulative fatigue damage ratio, C_W, of tanks shall be less than 1.0. For conventional proven designs, and when the cargo temperature is not lower than -55℃, fatigue analysis of cargo tanks and supports may not be considered.

Section 2 Type B Independent Tanks

201. Allowable stress for ultimate and accidental design conditions

The allowable stresses for primarily constructed of bodies of revolution shall not exceed the formular defined as below;

$$\sigma_m \leq f$$
$$\sigma_L \leq 1.5f$$
$$\sigma_b \leq 1.5F$$
$$\sigma_L + \sigma_b \leq 1.5F$$
$$\sigma_m + \sigma_b \leq 1.5F$$
$$\sigma_m + \sigma_b + \sigma_g \leq 3.0F$$
$$\sigma_L + \sigma_b + \sigma_g \leq 3.0F$$

where:

σ_m : equivalent primary general membrane stress

σ_L : equivalent primary local membrane stress

σ_b : equivalent primary bending stress

σ_g : equivalent secondary stress;

f : the lesser of R_m/A or R_e/B; and

F : the lesser of R_m/C or R_e/D

With regard to the stresses σ_m, σ_L, σ_b and σ_g, the definition of stress categories in **428. 3, Sec 4, Ch 5, Rule** are referred. The values A, B, C and D shall be shown on the **IGC Certificate** and shall have at least the minimum values of below table;

Values of A, B, C and D

	Nickel steels and carbon-manganese steels	Austenitic steels	Aluminium alloys
A	3	3.5	4
B	2	1.6	1.5
C	3	3	3
D	1.5	1.5	1.5
The above figures may be altered, taking into account the design condition considered in acceptance with the Society.			

The allowable membrane equivalent stresses for primarily constructed of plane surfaces, applied for finite element analysis, shall not exceed a lesser of $0.83R_e$ or $0.5R_m$ for nickel steels and carbon-manganese steels and a lesser of $0.83R_e$ or $0.4R_m$ for austenitic steels and aluminium alloys. The thickness of the skin plate and the size of the stiffener shall not be less than those required for type A independent tanks. If 9% nickel steel is used for the plates of the cargo tank, the allowable stress $0.75R_e$ is applied to the calculation of the tank plates.

202. Buckling utilization factor for ultimate and accidental design conditions

For primarily constructed of bodies of revolution, the direct analysis or equivalent international standard approved by Society shall be performed for buckling assessment. For primarily constructed of plane surfaces, buckling assessment for finite element analyses of cargo tanks subject to external pressure and other loads causing compressive stresses shall be carried out in accordance with **Ch 8, Rules Pt 13**. The utilization factor for the combination of all static and dynamic loads shall be less than 0.9 for ultimate design condition and 1.0 for accidental design condition.

203. Allowable cumulative fatigue damage ratio

If fatigue failures that can be detected by means of leakage detection system, allowable cumulative fatigue damage ratio, C_W, of tanks shall be less than 0.5. If the leakage detection of tank barrier cannot be assured due to defect or crack development, C_W shall be less than 0.1.

Section 3 Type C Independent Tanks

301. Allowable stress for ultimate and accidental design conditions

The allowable stresses shall not exceed the formular defined in below;

$$\sigma_m \leq f$$
$$\sigma_L \leq 1.5f$$
$$\sigma_b \leq 1.5f$$
$$\sigma_L + \sigma_b \leq 1.5f$$
$$\sigma_m + \sigma_b \leq 1.5f$$
$$\sigma_m + \sigma_b + \sigma_g \leq 3.0f$$
$$\sigma_L + \sigma_b + \sigma_g \leq 3.0f$$

Where,

With regard to the stresses σ_m, σ_L, σ_b and σ_g, Refer to **201**.

f : the lesser of (R_m/A) or (R_e/B);

The values A and B shall be shown on the IGC Certificate and shall have at least the minimum values of below table;

Values of A and B

	Nickel steels and carbon-manganese steels	Austenitic steels	Aluminium alloys
A	3	3.5	4
B	1.5	1.5	1.5

For horizontal cylindrical tanks made of C-Mn steel supported in saddles, the equivalent stress, σ_e, in the stiffening rings shall not exceed a lesser of $0.85R_e$ or $0.57R_m$ if calculated using finite element method:

$$\sigma_e = \sqrt{(\sigma_n + \sigma_b)^2 + 3\tau^2}$$

where,

σ_n : nominal stress in the circumferential direction of the stiffening ring($\mathrm{N/mm^2}$)

σ_b : bending stress in the circumferential direction of the stiffening ring($\mathrm{N/mm^2}$)

τ : shear stress in the stiffening ring($\mathrm{N/mm^2}$)

302. Design external pressure for buckling

When external pressure can be applied, the buckling assessment for cylindrical or spherical shells based on international standard(ex: Div.1 VIII, ASME) or equivalent regulation can be approved by Society. Alternatively, if nonlinear F.E analysis(1) is applied, the formular as below shall be satisfied;

$P_c/P_e \geq 3$ for cylindrical and spherical shells

where:

P_c : collapse external pressure($\mathrm{N/mm^2}$)

P_e : design external pressure($\mathrm{N/mm^2}$) defined in **423. 2.** (3) **Sec 4, Ch 5, Rules Pt 7**

(Note 1) : refer to Ch 2 in "Guidelines for Ultimate Hull Girder Strength Assessment" or "Guidelines for Buckling and Ultimate Strength Assessment using Nonlinear FEA"

303. Allowable cumulative fatigue damage ratio

If fatigue failures that can be detected by means of leakage detection system, allowable cumulative fatigue damage ratio, C_W, of tanks shall be less than 0.5. If the leakage detection of tank barrier cannot be assured due to defect or crack development, C_W shall be less than 0.1.

Section 4 Membrane Type Tanks

401. General

For ultimate and accidental design conditions, the acceptance criteria of membrane tanks may be different according to kind of membrane type and can be provided by membrane tank designer and manufacturer.

402. Allowable stress and buckling pressure of membrane systems

Sloshing load due to ship motion is governing factor in comparison with other loads such as cooling-down, ship loading, vibration, static heel or collision case. In order to evaluate the structural strength of membrane, PUF, plywood and mastic in cargo containment system against sloshing load

for ultimate and accidental design conditions, the following criteria is recommended.

- allowable equivalent stress : $\sigma_{eq} \leq 0.67R_e$
- allowable buckling pressure : $P_c < 0.9P_{cr}$

P_{cr} is the critical buckling pressure which should be based on the acknowledged experimental data for each material and the standard recognized by the Society

403. Allowable stress and buckling utilization factor of pump tower

The allowable stress and buckling utilization factor from FE analysis for tubular members in the pump tower shall be applied as below

- allowable axial tensile stress : $\sigma_t \leq 0.9R_e$
- allowable axial compressive stress :

$$\sigma_c \leq 0.783\,\sigma_{cr}, \qquad \text{for} \quad \sigma_{el} \leq R_e$$

$$\sigma_c \leq \left(0.9 - 0.0827\sqrt{\frac{R_e}{\sigma_{el}}}\right)\sigma_{cr}, \quad \text{for} \quad \sigma_{el} > R_e$$

where,

σ_{el} : elastic buckling stress for tubular section($\mathrm{N/mm^2}$)

σ_{cr} : critical buckling stress for stainless steels($\mathrm{N/mm^2}$)

σ_{el} and σ_{cr} is defined in **301, Sec 3, Ch 3, Guidance for Structural Strength Assessment of Pump Tower of LNG Carriers**.

- allowable shear stress : $\tau_c \leq 0.52R_e$
- allowable bending stress : $\sigma_b \leq 0.9\,\sigma_{b-cr}$

σ_{b-cr} = bending strength($\mathrm{N/mm^2}$) in **Guidance for Structural Strength Assessment of Pump Tower of LNG Carriers**.

- acceptance criteria for axial tension and bending :

$$\left(\frac{\sigma_t}{0.9R_e}\right) + \left(\frac{\sigma_b}{0.9\,\sigma_{b-cr}}\right) \leq 1$$

- acceptance criteria for axial compression and bending :

$$\left(\frac{\sigma_c}{0.783\sigma_{cr}}\right) + \left[\frac{\min\left(0.85,\ 1-0.4\dfrac{\sigma_c}{0.783\sigma_{el}}\right)\sigma_b}{\left\{0.9\,\sigma_{b-cr}\left(1-\dfrac{\sigma_c}{0.783\sigma_{el}}\right)\right\}}\right] \leq 1, \text{for } \frac{\sigma_c}{\sigma_{cr}} > 0.15$$

$$\left(\frac{\sigma_c}{0.783\sigma_{cr}}\right) + \left(\frac{\sigma_b}{0.9\,\sigma_{b-cr}}\right) \leq 1, \qquad \text{for } \frac{\sigma_c}{\sigma_{cr}} \leq 0.15$$

- allowable stress due to local buckling :

$$\sigma_c + \sigma_b \leq 0.75\,\sigma_{l-cr}, \qquad \text{for } \sigma_{l-cr} \leq 0.55R_e$$

$$\sigma_c + \sigma_b \leq \min\left(0.566 + 0.334\frac{\sigma_{l-cr}}{R_e}, 0.9\right)\sigma_{l-cr}\ , \quad \text{for } \sigma_{l-cr} > 0.55\,R_e$$

where,

σ_{l-cr} : critical local buckling stress($\mathrm{N/mm^2}$) in **301, Sec 3, Ch 3, Guidance for Structural Strength Assessment of Pump Tower of LNG Carriers**.

404. Allowable stress of tubular joints in pump tower

The assessment of tubular joints is to be evaluated in consideration of bending, punching shear and axial stress. The tubular joints shall satisfy following formular;

$$\left|\frac{F_A}{\mu F_{UA}}\right| + \left(\frac{M_{IPB}}{\mu M_{UIPB}}\right)^2 + \left|\frac{M_{OPB}}{\mu M_{UOPB}}\right| \leq 1$$

Where,

μ : 0.9, safety factor

F_A : axial load in the brace member(N)

F_{UA} : tubular joint strength for brace axial load(N)

M_{IPB} : in-plane bending moment in the brace member($\mathrm{N-mm}$)

M_{UIPB} : tubular joint strength for brace in-plane bending moment($\mathrm{N-mm}$)

M_{OPB} : out-of-plane bending moment in the brace member($\mathrm{N-mm}$)

M_{UOPB} : tubular joint strength for brace out-of-plane bending moment($\mathrm{N-mm}$)

405. Allowable stress of liquid dome cover and base plate

The allowable equivalent stresses from FE analysis for liquid dome cover and base plate structure is to comply with $\sigma_{eq} \leq 0.85R_e$.

406. Allowable cumulative fatigue damage ratio

If fatigue failures that can be detected by means of leakage detection system, allowable cumulative fatigue damage ratio, C_W, of liquid dome cover and bottom plate shall be less than 0.5. If the leakage detection of membrane and tubular section members in pump tower cannot be assured due to defect or crack development, C_W shall be less than 0.1.

Section 5 Integral tank and semi-membrane tanks

501. General

In the case that the ratio of design load to the structural strength of cargo containment system is less than the utilization factor selected appropriately, the cargo containment system can be approved. In order to evaluate the structural strength of cargo containment system, the analysis should be performed based on the criteria provide by designer who is responsible for the selection of criteria.

Section 6 Cargo containment system of noble configuration

601. General

The procedure and relevant design parameters of the limit state design shall comply with the standards for the use of limit state methodologies in the design of cargo containment systems of novel configuration, refer to **IGC Code Appendix 5.**

602. Limit states(IGC Code Appendix 5 1.3)

The limit states are divided into the three following categories:

(1) Ultimate limit states(ULS), which correspond to the maximum load-carrying capacity or, in some cases, to the maximum applicable strain, deformation or instability in structure resulting from buckling and plastic collapse - under intact (undamaged) conditions.

(2) Fatigue limit states(FLS), which correspond to degradation due to the effect of cyclic loading, and:

(3) Accident limit states(ALS), which concern the ability of the structure to resist accident situations.

603. Design format(IGC Code Appendix 5 2.)

The design format is based on a load and resistance factor design format. The fundamental principle of the load and resistance factor design format shall verify that design load effects do not exceed design resistances for any of the considered failure modes in any scenario.

$$L_d \leq R_d$$

L_d : design load effect(e.g., stresses, strains, displacements and vibrations) which s the most unfavourable combined load effect derived from the design loads.

$$L_d = q(F_{d1}, F_{d2}, ,,, F_{dk})$$

where,

q : the functional relationship between load and load effect determined by structural analyses.

F_{dk} : design load, $F_{dk} = \gamma_f F_k$

γ_f : load factor, and

F_k : the characteristic load as specified in **Sec 4, Ch 5, Rules**.

R_d : design resistance

$$R_d = \frac{R_k}{\gamma_R \gamma_C}$$

where,

R_k : the characteristic resistance. In case of materials covered by **Sec 6, Ch 5, Rules**, it may be, but not limited to, specified minimum yield stress, specified minimum tensile strength, plastic resistance of cross sections, and ultimate buckling strength.

γ_R : the resistance factor, defined as $\gamma_R = \gamma_m \gamma_s$.

γ_m : the partial resistance factor to take account of the probabilistic distribution of the material properties (material factor).

γ_s : the partial resistance factor to take account of the uncertainties on the capacity of the structure, such as the quality of the construction, method considered for determination of the capacity including accuracy of analysis.

γ_C : the consequence class factor, which accounts for the potential results of failure with regard to release of cargo and possible human injury. γ_C is divided into three levels as below;

- low : failure implies minor release of the cargo
- medium : failure implies release of the cargo and potential for human injury
- high : failure implies significant release of the cargo and high potential for human injury/fatality.

604. Finite element analysis(IGC Code Appendix 5 3.)

Three dimensional finite element analyses shall be carried out as an integrated model of the tank and the ship hull, including supports and keying system as applicable. All the failure modes shall be identified to avoid unexpected failures. Hydrodynamic analyses shall be carried out to determine the particular ship accelerations and motions in irregular waves and the response of the ship and its cargo containment systems to these forces and motions. Analysis requirements are as below;

(1) Buckling strength analyses of cargo tanks subject to external pressure and other loads causing compressive stresses shall be carried out in accordance with **Ch 8, Rules Pt.13** or equivalent. The method shall adequately account for the difference in theoretical and actual buckling stress as a result of plate out of flatness, plate edge misalignment, straightness, ovality and deviation from true circular form over a specified arc or chord length, as relevant.

(2) Fatigue and crack propagation analysis shall be carried out in accordance with (6) to (9), **418. 2, Sec 4, Ch 5, Rules**.

605. Ultimate limit state

1. Determination of Structural resistance(IGC Code Appendix 5 4.1)

Structural resistance may be established by testing or by complete analysis taking account of both elastic and plastic material properties. Safety margins for ultimate strength shall be introduced by partial factors of safety taking account of the contribution of stochastic nature of loads and resistance considering dynamic loads, pressure loads, gravity loads, material strength, and buckling capacities.

2. Load combination factor(IGC Code Appendix 5 4.2)

Appropriate combinations of permanent loads, functional loads and environmental loads including sloshing loads shall be considered in the analysis. At least two load combinations with partial load factors as given in below Table shall be used for the assessment of the ultimate limit states.

Load combination	Permanent loads	Functional loads	Environmental loads
a	1.1	1.1	0.7
b	1.0	1.0	1.3

The load factors for permanent and functional loads in load combination *a* are relevant for the normally well controlled and/or specified loads applicable to cargo containment systems such as vapour pressure, cargo weight, system self-weight, etc. Higher load factors may be relevant for permanent and functional loads where the inherent variability and/or uncertainties in the prediction models are higher.

3. Load factors for sloshing(IGC Code Appendix 5 4.3)

For sloshing loads, depending on the reliability of the estimation method, a larger load factor may be required by the Society.

4. Consequence class factor(IGC Code Appendix 5 4.4)

In cases where structural failure of the cargo containment system are considered to imply high po-

tential for human injury and significant release of cargo, the consequence class factor shall be taken as $\gamma_C = 1.2$. This value may be reduced if it is justified through risk analysis and subject to the approval by the Society. The risk analysis shall take account of factors including, but not limited to, provision of full or partial secondary barrier to protect hull structure from the leakage and less hazards associated with intended cargo. Conversely, higher values may be fixed by the Society, for example, for ships carrying more hazardous or higher pressure cargo. The consequence class factor shall in any case not be less than 1.0.

5. Safety level equivalence(IGC Code Appendix 5 4.5)

The load factors and the resistance factors used shall be such that the level of safety is equivalent to that of the cargo containment systems as described in **2.** through **6.** This may be carried out by calibrating the factors against known successful designs.

6. Material factors(IGC Code Appendix 5 4.6)

The material factor γ_m shall in general reflect the statistical distribution of the mechanical properties of the material, and needs to be interpreted in combination with the specified characteristic mechanical properties. For the materials defined in **Sec 6, Ch 5, Rules**, the material factor γ_m may be taken as:

- 1.1 : when the characteristic mechanical properties specified by the Society typically represents the lower 2.5% quantile in the statistical distribution of the mechanical properties, or
- 1.0 : when the characteristic mechanical properties specified by the Society represents a sufficiently small quantile such that the probability of lower mechanical properties than specified is extremely low and can be neglected.

7. Resistance factors(IGC Code Appendix 5 4.7)

The partial resistance factors γ_s shall in general be established based on the uncertainties in the capacity of the structure considering construction tolerances, quality of construction, the accuracy of the analysis method applied, etc.

8. Resistance factors for plastic deformation(IGC Code Appendix 5 4.7.1)

For design against excessive plastic deformation using the limit state criteria, the partial resistance factors γ_s shall be taken as follows:

$$\gamma_{s1} = 0.76 \frac{B}{\min\left(\frac{R_m}{R_e}\frac{A}{B},\ 1.0\right)} \quad , \quad \gamma_{s2} = 0.76 \frac{D}{\min\left(\frac{R_m}{R_e}\frac{D}{C},\ 1.0\right)}$$

Factors A, B, C and D are defined in **201. Sec 2 Ch 2**. The partial resistance factors given above are the results of calibration to conventional type B independent tanks.

9. Design against excessive plastic deformation

Stress acceptance criteria given below refer to elastic stress analyses. Parts of cargo containment systems where loads are primarily carried by membrane response in the structure shall satisfy the limit state criteria in **201. Sec 2 Ch 2**. replacing following factors; **(IGC Code Appendix 5 4.8.1, 4.8.2)**

$$f = \frac{R_e}{\gamma_{s1}\gamma_m\gamma_C} \quad , \quad F = \frac{R_e}{\gamma_{s2}\gamma_m\gamma_C}$$

Parts of cargo containment systems where loads are primarily carried by bending of girders, stiffeners and plates, shall satisfy the following limit state criteria:

$\sigma_{ms} + \sigma_{bp} \leq 1.25F$ (1), (2)

$\sigma_{ms} + \sigma_{bp} + \sigma_{bs} \leq 1.25F$ (2)

$\sigma_{ms} + \sigma_{bp} + \sigma_{bs} + \sigma_{bt} + \sigma_g \leq 3.0F$

(Note 1): The sum of equivalent section membrane stress and equivalent membrane stress in primary structure ($\sigma_{ms} + \sigma_{bp}$) will normally be directly available from three-dimensional finite element analyses.

(Note 2): The coefficient, 1.25, may be modified by the Society considering the design concept, configuration of the structure, and the methodology used for calculation of stresses.

where,

σ_{ms} : equivalent von Mises section membrane stress in primary structure($\mathrm{N/mm^2}$)

σ_{bp} : equivalent von Mises membrane stress in primary structure and stress in secondary(stiffener) and tertiary(plating) structure caused by bending of primary structure ($\mathrm{N/mm^2}$)

σ_{bs} : equivalent von Mises section bending stress in secondary structure(stiffener) and stress in tertiary structure(plating) caused by bending of secondary structure(stiffener)($\mathrm{N/mm^2}$)

σ_{bt} : equivalent von Mises section bending stress in tertiary structure, i.e. plate bending stress ($\mathrm{N/mm^2}$)

σ_g : equivalent von Mises secondary stress($\mathrm{N/mm^2}$)

(IGC Code Appendix 5 4.8.3)

Normal stress is the component of stress normal to the plane of reference. Equivalent section membrane stress is the component of the normal stress that is uniformly distributed and equal to the average value of the stress across the cross section of the structure under consideration. If this is a simple shell section, the section membrane stress is identical to the membrane stress. Section bending stress is the component of the normal stress that is linearly distributed over a structural section exposed to bending action. **(IGC Code Appendix 5 4.8.4)**

10. Resistance factors for buckling(IGC Code Appendix 5 4.9)

The same factors γ_C , γ_m and γ_s shall be used for design against buckling unless otherwise stated in the applied recognised buckling standard. In any case the overall level of safety shall not be less than given by these factors.

606. Fatigue limit states

1. Fatigue load factor(IGC Code Appendix 5 5.2)

Fatigue design condition as described in **418. 2, Sec 4, Ch 5, Rules** shall be complied with as applicable depending on the cargo containment system concept. The load factors for FLS shall be taken as 1.0 for all load categories.

2. Consequence class and resistance factor(IGC Code Appendix 5 5.3)

Consequence class factor γ_C and resistance factor γ_R shall be taken as 1.0.

3. Cumulative fatigue damage ratio(IGC Code Appendix 5 5.4)

Fatigue damage shall be calculated as described in **1.5**. The calculated cumulative fatigue damage ratio for the cargo containment systems shall be less than or equal to the values given in below Table.

	Consequence class		
C_W	low	medium	high
	1.0	0.5	0.5 [1]
[1] Lower value shall be used in accordance with (6)~(9) **418. 2, Sec 4, Ch 5 Rules Pt 7** depending on the detectability of defect or crack, etc.			

4. Crack propagation analyses(IGC Code Appendix 5 5.6)

Crack propagation analyses shall be carried out in accordance with methods laid down in **419.2** (6) to (9)**, Sec 4, Ch 5, Rules**.

607. Accident limit states(IGC Code Appendix 5 6.)

1. Accident design condition shall be complied with as applicable, depending on the cargo containment system concept.

2. Load and resistance factors may be relaxed compared to the ultimate limit state considering that damages and deformations can be accepted as long as this does not escalate the accident scenario.

3. The load factors for ALS shall be taken as 1.0 for permanent loads, functional loads and environmental loads.

4. Loads related static heel loads, collision and loads due to flooding on ship need not be combined with each other or with environmental loads.

5. Resistance factor γ_R shall in general be taken as 1.0.

6. Consequence class factors γ_C shall in general be taken as defined in (4), **605**, but may be relaxed considering the nature of the accident scenario.

7. The characteristic resistance R_k shall in general be taken as for the ultimate limit state, but may be relaxed considering the nature of the accident scenario.

8. Additional relevant accident scenarios shall be determined based on a risk analysis.

608. Testing requirements(IGC Code Appendix 5 7.)

Cargo containment systems designed according to this Guidelines shall be tested to the same extent as described in **420, Sec 4, Ch 5, Rules**, as applicable depending on the cargo containment system concept. ⚓

Annex 7A-9 Guidance for Cargo Fuel Ready Ships *(2025)*

Section 1 General

101. Application

1. **This Annex applies to ships** which are prepared for conversion with the design or the partial installation for use of cargo as fuel during the new building phase(hereafter referred to as "Cargo fuel ready ships" in the Guidance) for the purpose of a conversion from a ship using conventional marine fuels to cargo fuel after delivery.
2. This Guidance contains levels of readiness for use of cargo as fuel(hereafter referred to as "Cargo fuel ready levels" in the Guidance) and requirements applicable thereto, and the scope of preparation is defined by the agreement between the shipowner and the shipbuilder.
3. The design and installation of cargo fuel systems for fuel-ready ships are to comply with the requirements specified in **Ch 5** of **Rules**, which are in force at the time of the construction contract for the new building. However, where a cargo fuel ready ship in accordance with this Guidance is converted to a cargo fuelled ship after delivery, the ship is to comply with **Ch 5** of **Rules** in force at the time of the ship conversion.
4. In the absence of requirements for the use of such cargo fuels, the **Rules for the Classification of Ships Using Low-flashpoint Fuels** or valid guidance may be applied.

102. Definitions

Unless specified in **Ch 5** of **Rules**, the definitions of terms follow the **Rules for the Classification of Ships Using Low-flashpoint Fuels**

103. Cargo fuel ready levels

1. **Cargo** fuel ready levels are defined in 2 steps as follows:
   (1) The level of preparing the concept design
   (2) The level of preparing the generic design
   (3) The level of installing parts of the systems with the detailed design in addition to above (2)
2. The class notations defined in **Sec 2** may be assigned where the ready level in **Para 1** above is in compliance with this Guidance.

Section 2 Class Notation

201. General

1. The class notations specified in **202.** and **205.** may be assigned according to the cargo fuel ready level.
2. The requirements for the class notations in this Section are to comply with **Sec 3**.

202. (Cargo name) Ready D(A)

1. (Cargo name) Ready D(A) as an additional special feature notation may be assigned to ships whose the cargo fuelled ship concept design is prepared for evaluation of the basic suitability. For example, 'cargo name' can be labeled as Ammonia Ready D(A), LNG Ready D(A), LPG Ready D(A), Methanol Ready D(A), etc.
2. (Cargo name) Ready D(A) is not to be assigned to ships having (Cargo name) Ready D.

203. (Cargo name) Ready D

1. (Cargo name) Ready D as an additional special feature notation may be assigned to ships for which the generic design is prepared.
2. (Cargo name) Ready D is not to be assign to ships having (Cargo name) Ready I.

204. (Cargo name) Ready I

1. (Cargo name) Ready I as an additional special feature notation may be assigned to ships for which parts of the systems are installed with the detailed design in addition to the generic design.
2. In assignment of the (Cargo name) Ready I, the characters corresponding to the installed items may be assigned in the bracket one or a combination of them in addition to (Cargo name) Ready I. The characters corresponding to the installed items are as follows:
   (1) Cargo fuel supply systems - FS
   (2) Cargo fuelled main engines - ME
   (3) Cargo fuelled auxiliary engines - AE
   (4) Cargo fuelled boilers - B
   (5) Main engines that can be converted to cargo fuel operation - ME-C
   (6) Auxiliary engines that can be converted to cargo fuel operation - AE-C
   (7) Boilers that can be converted to cargo fuel operation - B-C

   For example, (Cargo name) Ready I(FS, ME) may be assigned to the ship on which cargo fuel supply systems and cargo fuelled main engines are installed.

Section 3 Requirements for Levels of Cargo Fuel Ready

301. General

1. This Guidance prescribes plans to be submitted and systems to be installed for cargo fuel ready levels. The design and installation of structures and systems are to be in accordance with applicable requirements in Ch 5 of Rules.
2. Drawing approval and survey for cargo fuel ready are not accepted as drawing approval and survey for conversion to cargo fuel ship. When the ship is converted, drawing approval and survey are to be carried out in accordance with Ch 5 of Rules in force at the time of the ship conversion. Approved Drawings and certifications from new building stage may be used as reference for conversion.

302. General Level of Preparing Concept Design

1. Plans and documents required for an Approval in Principle (AIP) are to be submitted for (Cargo name) Ready D(A). The list of plans and documents to be submitted may be adjusted after consultation with the Society
2. The plans and documents required in this Section is to be marked "(Cargo name) Ready" to separate them from the normal plans and documents of new building.

303. General Level of Preparing Generic Design

1. General

(1) This Section prescribes plans and documents to be submitted for (Cargo name) Ready D. The detail requirements for designs are to be in accordance with applicable requirements in Ch 5 of Rules.

(2) The plans and documents required in this Section is to be marked "(Cargo name) Ready" to separate them from the normal plans and documents of new building.

(3) Where parts of plans and documents required in this Section are not available, alternative docu-

ments may be accepted by the Society's review.

2. Plans and documents to be submitted

(1) The following plans and documents are to be submitted to the Society for review
  (A) General arrangement plans showing location of:
    (a) Machinery spaces, accommodation, service and control station spaces
    (b) Cargo fuel supply/preparation room
    (c) Cargo fuel piping routing from cargo tanks to engines
    (d) Ventilating pipes, doors and openings to cargo fuel supply/preparation room and other hazardous areas
    (e) Entrances, air inlets and openings to accommodation, service and control station spaces
    (f) Hazardous areas of zone 0, 1 and 2
    (g) Toxic zone (if applicable)
  (B) Following plans and data of cargo fuel supply systems:
    (a) Arrangement of engine room, cargo fuel supply/preparation room and other spaces containing cargo fuel equipment
    (b) Cargo fuel supply piping diagram
  (C) Data for a risk analysis according to **Ch 3 Sec 2 of the Rules for the Classification of Ships Using Low-flashpoint Fuels**.
  (D) Plans and data for equipment and systems regarding fire protection and extinguishing

304. Level of Installing Parts of Systems

1. General

(1) This Section prescribes parts of the systems to be installed and plans and documents to be submitted for (Cargo name) Ready I. The detail requirements for designs and installation of installed systems are to be in accordance with applicable requirements in Ch 5 of Rules.
(2) The plans and documents for generic design required in **Sec 2** are to be submitted and reviewed by the Society except those required for approval in **2.** to **8.**
(3) Parts of the systems are categorized in the follows:
  (A) Cargo fuel supply systems
  (B) Cargo fuelled main engines
  (C) Cargo fuelled auxiliary engines
  (D) Cargo fuelled boilers
  (E) Main engines that can be converted to cargo fuel operation
  (F) Auxiliary engines that can be converted to cargo fuel operation
  (G) Boilers that can be converted to cargo fuel operation
(4) The parts which are installed on board are to be reflected in the normal plans of new building and "(Cargo name) Ready" is not to be marked on those plans.

2. Cargo fuel supply systems

(1) Cargo fuel supply systems are to be installed in accordance with the regulations specificed in 101. 4 of this Guidance.
(2) The following plans and documents are to be submitted to the Society for approval.
  (A) Arrangement of engine room, fuel supply/preparation room and other spaces containing cargo fuel equipment
  (B) Ventilation system arrangement of engine room, fuel preparation room and other spaces containing cargo fuel equipment
  (C) Drawings and specifications of cargo fuel supply piping
  (D) Drawings and specifications of offsets, loops, bends and mechanical expansion joints, such as bellows, slip joints(only inside tank) or similar means in the cargo fuel piping
  (E) Drawings and specifications of flanges, valves and other fittings in the cargo fuel piping system. For valves intended for piping systems with a design temperature below - 55 °C, documentation for leak test and functional test at design temperature (type test) is required
  (F) Documentation of type tests for expansion components in the cargo fuel piping system.
  (G) Specification of materials, welding, post-weld heat treatment and non-destructive testing of cargo fuel piping
  (H) Specification of pressure tests (structural and tightness tests) of cargo fuel piping
  (I) Program for functional tests of all piping systems including valves, fittings and associated

equipment for handling cargo fuel(liquid or vapour)
(J) Drawings and specifications of insulation for low temperature piping where such insulation is installed
(K) Specification of electrical bonding of piping
(L) Cooling or heating water system in connection with cargo fuel system, if fitted.

3. Cargo fuelled main enigine

Main engines are to be installed in accordance with Sec 16 of Pt 7 Ch 5.

4. Cargo fuelld auxiliary engines

Auxiliary engines are to be installed in accordance with Sec 16 of Pt 7 Ch 5.

5. Cargo fulled boilers

Cargo fulled boilers are to be installed in accordance with Sec 16 of Pt 7 Ch 5.

6. Main engines that can be converted to gas fuel operation

(1) Convertible-type main engines are to be installed.
(2) Following plans are to be submitted for reference:
(A) details of the conversion for cargo fuel operation
(B) list of the components that need to be replaced
(C) list of new components

7. Auxiliary engines that can be converted to gas fuel operation

(1) Convertible-type auxiliary engines are to be installed.
(2) Following plans are to be submitted for reference:
(A) details of the conversion for cargo fuel operation
(B) list of the components that need to be replaced
(C) list of new components

8. Boilers that can be converted to gas fuel operation

(1) Convertible-type boilers are to be installed.
(2) Following plans are to be submitted for reference:
(A) details of the conversion for cargo fuel operation
(B) list of the components that need to be replaced
(C) list of new components

305. Survey

1. Classification survey during construction

Systems are to be tested at the shops of manufacturer and after installation on board in accordance with Ch 5 of Rules.

2. Periodical surveys

In application of this Guidance, the general condition of the relevant systems installed on board is to be examined visually at periodical surveys for the vessels having (Cargo name) Ready I notation. The systems are to be surveyed and evaluated for the condition at time of conversion, and the scope of test will be defined depending on time elapsed from new building and maintenance level of the systems.⚓

Annex 7B-1 Table of Summary of Minimum Requirements

【See Rule】

Product name (column a)	The product name shall be used in the shipping document for any cargo offered for bulk shipments. Any additional name may be included in brackets after the product name. In some cases, the product names are not identical with the names given in previous issues of the Code
UN number (column b)	Deleted
Pollution category (column c)	The letter X, Y, Z means the pollution category assigned to each product under MARPOL Annex II
Hazards (column d)	S means that the product is included in the Rules because of its safety hazards; P means that the product is included in the Rules because of its pollution hazards; and S/P means that the product is included in the Rules because of both its safety and pollution hazards.
Ship type (column e)	1 : ship type 1 2 : ship type 2 3 : ship type 3
Tank type (column f)	1 : independent tank 2 : integral tank G : gravity tank P : pressure tank
Tank vents (column g)	Cont. : controlled venting Open : open venting
Tank environmental control (column h)	Inert : inerting Pad : liquid or gas padding Dry : drying Vent : natural or forced ventilation No : no special requirements under this code (inerting may be required under SOLAS)
Electrical equipment (column i)	Temperature classes (i') ; T1 to T6, – : indicates no requirements, blank : no information Apparatus groups(i'') ; IIA, IIB or IIC, – : indicates no requirements, blank : no information Flash point (i''') ; Yes : flashpoint exceeding 60°C No : flashpoint not exceeding 60°C NF : nonflammable product
Gauging (column j)	O : open gauging R : restricted gauging C : closed gauging
Vapour detection (column k)	F : flammable vapours T : toxic vapours No : indicates no special requirements under this Code
Fire protection (column l)	A : alcohol-resistant foam or multi-purpose foam B : regular foam, encompasses all foams that are not of an alcohol-resistant type, including fluoroprotein and aqueous-film-forming foam (AFFF) C : water-spray D : dry chemical No : no special requirements under this chapter
Materials of construction (column m)	Deleted
Emergency equipment (column n)	Yes : see 1403. 1 No : no special requirements under this Chapter
Specific and operational requirements (column o)	When specific reference is made to chapter 15 and /or 16, these requirements shall be additional to the requirements in any other column.

a	c	d	e	f	g	h	i'	i"	i"'	j	k	l	n	o
Acetic acid	Z	S/P	3	2G	Cont	No	T1	IIA	No	C	F	AC	Yes	1511.2, 1511.3, 1511.4, 1511.6, 1511.7, 1511.8, 1517, 1519, 16.2.9
Acetic anhydride	Z	S/P	2	2G	Cont	No	T2	IIA	No	R	FT	AC	Yes	1511.2, 1511.3, 1511.4, 1511.6, 1511.7, 1511.8, 15.12.3, 15.12.4, 1519.6
Acetochlor	X	S/P	2	2G	Open	No			Yes	O	No	AC	No	1519.6, 16.2.6, 16.2.9
Acetone cyanohydrin	Y	S/P	1	1G	Cont	No	-	-	Yes	C	T	AC	Yes	15.12, 15.13, 1517, 1519, 16.6.1, 16.6.2, 16.6.3
Acetonitrile	Z	S/P	3	2G	Cont	No	T2	IIA	No	R	FT	AC	No	15.12.3, 15.12.4, 1519.6
Acetonitrile (Low purity grade)	Y	S/P	3	2G	Cont	No	T1	IIA	No	R	FT	AC	No	15.12.3, 15.12.4, 1519.6
Acid oil mixture from soya bean, corn (maize) and sunflower oil refining	Y	S/P	2	2G	Open	No	-	-	Yes	O	No	ABC	No	1519.6, 16.2.6, 16.2.7, 16.2.9
Acrylamide solution (50% or less)	Y	S/P	3	2G	Cont	No			NF	C	T	No	No	15.12, 15.13, 1517, 1519, 16.2.9, 16.6.1
Acrylic acid	Y	S/P	2	2G	Cont	No	T2	IIA	No	C	FT	AC	Yes	1511.2, 1511.3, 1511.4, 1511.6, 1511.7, 1511.8, 15.12.3, 15.12.4, 15.13, 1517, 1519, 16.2.9, 16.6.1
Acrylic acid/ethenesulphonic acid copolymer with phosphonate groups, sodium salt solution	Z	P	3	2G	Open	No			Yes	O	No	ABC	No	
Acrylonitrile	Y	S/P	2	2G	Cont	No	T1	IIB	No	C	FT	AC	Yes	15.12, 15.13, 1517, 1519
Acrylonitrile-Styrene copolymer dispersion in polyether polyol	Y	P	3	2G	Open	No			Yes	O	No	ABC	No	1519.6, 16.2.6
Adiponitrile	Z	S/P	2	2G	Cont	No	-	-	Yes	C	T	AC	Yes	15.12, 1517, 1519, 16.2.9
Alachlor technical (90% or more)	X	S/P	2	2G	Cont	No			Yes	C	T	AC	No	15.12, 1517, 1519.6, 16.2.9
Alcohol (C9-C11) poly (2.5-9) ethoxylate	Y	S/P	3	2G	Cont	No			Yes	R	T	AC	No	15.12.3, 15.12.4, 1519.6, 16.2.9
Alcohol (C6-C17) (secondary) poly(3-6) ethoxylates	Y	S/P	2	2G	Cont	No			Yes	C	T	AC	Yes	15.12, 1517, 1519, 16.2.9
Alcohol (C6-C17) (secondary) poly(7-12) ethoxylates	Y	S/P	2	2G	Cont	No			Yes	C	T	AC	Yes	15.12, 1517, 1519, 16.2.6, 16.2.9
Alcohol (C10-C18) poly(7) ethoxylate	Y	S/P	3	2G	Cont	No			Yes	R	T	AC	No	15.12.3, 15.12.4, 1519.6, 16.2.6, 16.2.9
Alcohol (C12-C16) poly(1-6) ethoxylates	Y	S/P	2	2G	Cont	No			Yes	R	T	AC	No	15.12.3, 15.12.4, 1519.6, 16.2.9
Alcohol (C12-C16) poly(20+) ethoxylates	Y	S/P	3	2G	Cont	No			Yes	R	T	AC	No	15.12.3, 15.12.4, 1519.6, 16.2.9
Alcohol (C12-C16) poly(7-19) ethoxylates	Y	S/P	2	2G	Cont	No			Yes	C	T	AC	Yes	15.12, 1517, 1519, 16.2.9
Alcohols (C13+)	Y	P	2	2G	Open	No			Yes	O	No	ABC	No	1519.6, 16.2.9
Alcohols (C12+), primary, linear	Y	S/P	2	2G	Open	No	-	-	Yes	O	No	ABC	No	1519.6, 16.2.6, 16.2.9

a	c	d	e	f	g	h	i'	i"	i"'	j	k	l	n	o
Alcohols (C8-C11), primary, linear and essentially linear	Y	S/P	2	2G	Cont	No	-	-	Yes	R	T	ABC	No	15.12.3, 15.12.4, 1519.6, 16.2.6, 16.2.9
Alcohols (C12-C13), primary, linear and essentially linear	Y	S/P	2	2G	Open	No	-	-	Yes	O	No	ABC	No	1519.6, 16.2.6, 16.2.9
Alcohols (C14-C18), primary, linear and essentially linear	Y	S/P	2	2G	Open	No	-	-	Yes	O	No	ABC	No	1519.6, 16.2.6
Alkanes (C6-C9)	X	S/P	2	2G	Cont	No	T3	IIA	No	C	FT	AC	No	15.12, 1517, 1519.6
Iso- and cyclo-alkanes (C10-C11)	Y	S/P	3	2G	Cont	No	T3	IIA	No	R	F	AC	No	1519.6
Iso- and cyclo-alkanes (C12+)	Y	S/P	3	2G	Cont	No	T3	IIA	No	R	F	AC	No	1519.6
n-Alkanes (C9-C11)	Y	S/P	3	2G	Cont	No	T3	IIA	No	R	F	ABC	No	1519.6
n-Alkanes (C10 - C20)	Y	P	2	2G	Open	No	-	-	Yes	O	No	ABC	No	1519.6, 16.2.6, 16.2.9
Alkaryl polyethers (C9-C20)	Y	S/P	2	2G	Cont	No			Yes	C	T	ABC	Yes	15.12, 1517, 1519, 16.2.6
Alkenoic acid, polyhydroxy ester borated	Y	S/P	2	2G	Cont	No	-	-	Yes	R	T	ABC	No	15.12.3, 15.12.4, 1519.6, 16.2.6
Alkenyl (C11+) amide	X	S/P	2	2G	Open	No	-	-	Yes	O	No	ABC	No	1519.6, 16.2.6, 16.2.9
Alkenyl (C16-C20) succinic anhydride	Z	S/P	3	2G	Cont	No			Yes	C	T	ABC	Yes	15.12, 1517, 1519
Alkyl acrylate/vinylpyridine copolymer in toluene	Y	S/P	2	2G	Cont	No	T1	IIB	No	C	FT	ABC	No	15.12, 1517, 1519.6, 16.2.9
Alkylaryl phosphate mixtures (more than 40% Diphenyl tolyl phosphate, less than 0.02% ortho-isomers)	X	S/P	2	2G	Open	No	-	-	Yes	O	No	ABC	No	1519.6
Alkylated (C4-C9) hindered phenols	Y	S/P	2	2G	Cont	No	-	-	Yes	R	T	ABC	No	15.12.3, 15.12.4, 1519.6, 16.2.6, 16.2.9
Alkylbenzene, alkylindane, alkylindene mixture (each C12-C17)	Z	P	3	2G	Open	No			Yes	O	No	AC	No	
Alkyl benzene distillation bottoms	Y	S/P	2	2G	Open	No	-	-	Yes	O	No	ABC	No	1519.6, 16.2.6
Alkylbenzene mixtures (containing at least 50% of toluene)	Y	S/P	3	2G	Cont	No	T1	IIA	No	C	FT	ABC	No	15.12, 1517, 1519.6
Alkylbenzenes mixtures (containing naphthalene)	X	S/P	2	2G	Cont	No			Yes	C	T	ABC	No	15.12, 1517, 1519.6
Alkyl (C3-C4) benzenes	Y	S/P	2	2G	Cont	No	T1	IIA	No	R	FT	ABC	No	15.12.3, 15.12.4, 1519.6
Alkyl (C5-C8) benzenes	X	S/P	2	2G	Cont	No			Yes	R	T	AC	No	15.12.3, 15.12.4, 1519.6
Alkyl (C9+)benzenes	Y	S/P	3	2G	Open	No	-	-	Yes	O	No	ABC	No	1519.6
Alkyl (C11-C17) benzene sulphonic acid	Y	S/P	2	2G	Cont	No	-	-	Yes	R	T	AC	No	15.12.3, 15.12.4, 1519.6, 16.2.6
Alkylbenzene sulphonic acid, sodium salt solution	Y	S/P	2	2G	Cont	No	-	-	NF	C	T	No	Yes	15.12, 1517, 1519, 16.2.6, 16.2.9
Alkyl/cyclo (C4-C5) alcohols	Y	S/P	3	2G	Cont	No	T2	IIB	No	R	FT	AC	No	15.12.3, 15.12.4, 1519.6

a	c	d	e	f	g	h	i'	i"	i"'	j	k	l	n	o
Alkyl (C10-C15, C12 rich) phenol poly (4-12) ethoxylate	Y	S/P	2	2G	Cont	No			Yes	R	T	ABC	No	15.12.3, 15.12.4, 1519.6, 16.2.6
Alkyl (C12+) dimethylamine	X	S/P	1	2G	Cont	No	-	-	Yes	C	T	ABC	Yes	15.12, 1517, 1519
Alkyl dithiocarbamate (C19-C35)	Y	P	3	2G	Open	No			Yes	O	No	ABC	No	1519.6, 16.2.6, 16.2.9
Alkyldithiothiadiazole (C6-C24)	Y	P	3	2G	Open	No	-	-	Yes	O	No	AC	No	1519.6, 16.2.6
Alkyl ester copolymer (C4-C20)	Y	P	2	2G	Open	No			Yes	O	No	ABC	No	1519.6, 16.2.6, 16.2.9
Alkyl (C7-C9) nitrates	Y	S/P	2	2G	Cont	No			Yes	C	T	ABC	Yes	15.12, 1517, 1519, 15.20, 16.6.1, 16.6.2, 16.6.3
Alkyl (C8-C10)/(C12-C14):(40% or less/60% or more) polyglucoside solution (55% or less)	Y	S/P	3	2G	Cont	No			Yes	C	T	AC	Yes	15.12, 1517, 1519, 16.2.6, 16.2.9
Alkyl (C8-C10)/(C12-C14):(60% or more/40% or less) polyglucoside solution(55% or less)	Y	S/P	3	2G	Cont	No			Yes	R	T	AC	No	15.12.3, 15.12.4, 1519.6, 16.2.6, 16.2.9
Alkyl (C7-C11)phenol poly(4-12) ethoxylate	Y	S/P	2	2G	Cont	No			Yes	R	T	AC	No	15.12.3, 15.12.4, 1519.6
Alkyl (C8-C40) phenol sulphide	Z	S/P	3	2G	Open	No			Yes	O	No	ABC	No	
Alkyl (C8-C9) phenylamine in aromatic solvents	Y	S/P	2	2G	Cont	No	T1	IIB	No	R	FT	ABC	No	15.12.3, 15.12.4, 1519.6
Alkyl (C9-C15) phenyl propoxylate	Z	S/P	3	2G	Cont	No			Yes	R	T	ABC	No	15.12.3, 15.12.4, 1519.6
Alkyl (C8-C10) polyglucoside solution (65% or less)	Y	S/P	3	2G	Cont	No			Yes	R	T	AC	No	15.12.3, 15.12.4, 1519.6, 16.2.6
Alkyl (C8-C10)/(C12-C14):(50% /50%) polyglucoside solution (55% or less)	Y	S/P	3	2G	Cont	No			Yes	C	T	AC	Yes	15.12, 1517, 1519, 16.2.6, 16.2.9
Alkyl (C12-C14) polyglucoside solution (55% or less)	Y	S/P	3	2G	Cont	No			Yes	C	T	AC	Yes	15.12, 1517, 1519, 16.2.9
Alkyl (C12-C16) propoxyamine ethoxylate	X	S/P	2	2G	Cont	No	-	-	Yes	C	T	AC	Yes	15.12, 1517, 1519, 16.2.6
Alkyl (C10-C20, saturated and unsaturated) phosphite	Y	P	2	2G	Open	No			Yes	O	No	ABC	No	1519.6, 16.2.9
Alkyl sulphonic acid ester of phenol	Y	P	3	2G	Open	No			Yes	O	No	ABC	No	1519.6, 16.2.6
Alkyl (C18+) toluenes	Y	S/P	2	2G	Open	No	-	-	Yes	O	No	ABC	No	1519.6, 16.2.9
Alkyl (C18-C28) toluenesulphonic acid	Y	S/P	2	2G	Cont	No	-	-	Yes	C	T	ABC	Yes	1511.2, 1511.3, 1511.4, 1511.6, 1511.7, 1511.8, 15.12, 1517, 1519, 16.2.6, 16.2.9
Alkyl (C18-C28) toluenesulphonic acid, calcium salts, borated	Y	S/P	3	2G	Open	No	-	-	Yes	O	No	ABC	No	1519.6, 16.2.6

a	c	d	e	f	g	h	i'	i"	i"'	j	k	l	n	o
Alkyl (C18-C28) toluenesulphonic acid, calcium salts, low overbase	Y	S/P	2	2G	Cont	No	-	-	Yes	R	T	ABC	No	15.12.3, 15.12.4, 1519.6, 16.2.6
Alkyl (C18-C28) toluenesulphonic acid, calcium salts, high overbase	Y	S/P	3	2G	Open	No	-	-	Yes	O	No	ABC	No	1519.6, 16.2.6
Allyl alcohol	Y	S/P	2	2G	Cont	No	T2	IIB	No	C	FT	AC	Yes	15.12, 1517, 1519
Allyl chloride	Y	S/P	2	2G	Cont	No	T2	IIA	No	C	FT	AC	No	15.12, 1517, 1519
Aluminium chloride/Hydrogen chloride solution	Y	S/P	2	2G	Cont	No	-	-	NF	C	T	No	Yes	15.11, 15.12, 1517, 1519
Aluminium hydroxide, sodium hydroxide, sodium carbonate solution (40% or less)	Y	S/P	2	2G	Cont	No			NF	C	T	No	Yes	15.12, 1517, 1519
Aluminium sulphate solution	Y	S/P	2	2G	Cont	No			NF	C	T	No	Yes	15.12, 1517, 1519
2-(2-Aminoethoxy) ethanol	Z	S/P	3	2G	Cont	No			Yes	C	T	AD	Yes	15.12, 1517, 1519
Aminoethyldiethanolamine /Aminoethylethanolamine solution	Z	S/P	3	2G	Cont	No	-	-	Yes	C	T	AC	Yes	15.12, 1517, 1519, 16.2.9
Aminoethyl ethanolamine	Z	S/P	3	2G	Cont	No	-	-	Yes	C	T	AC	Yes	15.12, 1517, 1519
N-Aminoethylpiperazine	Z	S/P	3	2G	Cont	No			Yes	C	T	AC	Yes	15.12, 1517, 1519
2-Amino-2-methyl-1-propanol	Z	S/P	3	2G	Cont	No			Yes	C	T	AC	Yes	15.12, 1517, 1519
Ammonia aqueous (28% or less)	Y	S/P	2	2G	Cont	No			NF	C	T	No	Yes	15.12, 1517, 1519
Ammonium chloride solution (less than 25%) (*)	Z	S/P	3	2G	Open	No	-	-	NF	O	No	No	No	
Ammonium hydrogen phosphate solution	Z	P	3	2G	Open	No			Yes	O	No	AC	No	
Ammonium lignosulphonate solutions	Z	P	3	2G	Open	No	-	-	Yes	O	No	AC	No	16.2.9
Ammonium nitrate solution (93% or less) (*)	Z	S/P	2	1G	Cont	No			NF	R	T	No	No	15.2, 1511.4, 1511.6, 15.12.3, 15.12.4, 15.18, 1519.6, 16.2.9
Ammonium polyphosphate solution	Z	P	3	2G	Open	No	-	-	Yes	O	No	AC	No	
Ammonium sulphate solution	Z	P	3	2G	Open	No			NF	O	No	No	No	
Ammonium sulphide solution (45% or less) (*)	Y	S/P	2	2G	Cont	Inert	T4	IIB	No	C	FT	AC	No	15.12, 1517, 1519, 16.6.1, 16.6.2, 16.6.3
Ammonium thiosulphate solution (60% or less)	Z	S/P	3	2G	Open	No			NF	O	No	No	No	
Amyl acetate (all isomers)	Y	S/P	3	2G	Cont	No	T2	IIA	No	R	F	ABC	No	1519.6
n-Amyl alcohol	Z	S/P	2	2G	Cont	No	T2	IIA	No	C	FT	ABC	Yes	15.12, 1517, 1519
Amyl alcohol, primary	Z	S/P	3	2G	Cont	No	T2	IIA	No	R	FT	ABC	No	15.12.3, 15.12.4, 1519.6
sec-Amyl alcohol	Z	S/P	3	2G	Cont	No	T2	IIA	No	R	FT	ABC	No	15.12.3, 15.12.4, 1519.6

a	c	d	e	f	g	h	i'	i"	i"'	j	k	l	n	o
tert-Amyl alcohol	Z	S/P	3	2G	Cont	No	T2	IIA	No	R	F	AC	No	1519.6
tert-Amyl ethyl ether	Z	P	3	2G	Cont	No	T3	IIA	No	R	F	ABC	No	1519.6
tert-Amyl methyl ether	X	S/P	2	2G	Cont	No	T2	IIB	No	R	FT	AC	No	15.12.3, 15.12.4, 1519.6
Aniline	Y	S/P	2	2G	Cont	No	T1	IIA	Yes	C	T	AC	Yes	15.12, 1517, 1519
Aryl polyolefins (C11-C50)	Y	P	2	2G	Open	No			Yes	O	No	ABC	No	1519.6, 16.2.6, 16.2.9
Aviation alkylates (C8 paraffins and iso-paraffins BPT 95 - 120°C)	X	S/P	2	2G	Cont	No	T3	IIA	No	R	F	ABC	No	1519.6
Barium long chain (C11-C50) alkaryl sulphonate	Y	S/P	2	2G	Cont	No			Yes	R	T	ABC	No	15.12.3, 15.12.4, 1519, 16.2.6, 16.2.9
Benzene and mixtures having 10% benzene or more (i)	Y	S/P	3	2G	Cont	No	T1	IIA	No	C	FT	ABC	No	15.12, 1517, 1519.6, 16.2.9
Benzene sulphonyl chloride	Y	S/P	3	2G	Cont	No			Yes	C	T	ABC	Yes	15.12, 1517, 1519, 16.2.9
Benzenetricarboxylic acid, trioctyl ester	Y	S/P	2	2G	Cont	No			Yes	R	T	ABC	No	15.12.3, 15.12.4, 1519.6, 16.2.6
Benzyl acetate	Y	S/P	2	2G	Cont	No			Yes	R	T	AC	No	15.12.3, 15.12.4, 1519.6
Benzyl alcohol	Y	S/P	3	2G	Cont	No			Yes	R	T	AC	No	15.12.3, 15.12.4, 1519.6
Benzyl chloride	Y	S/P	2	2G	Cont	No	T1	IIA	No	C	FT	ABC	Yes	15.12, 15.13, 1517, 1519
Bio-fuel blends of Diesel/gas oil and FAME (>25% but <99% by volume)	X	S/P	2	2G	Cont	No	-	-	Yes	C	T	ABC	No	15.12, 1517, 1519.6
Bio-fuel blends of Diesel/gas oil and vegetable oil (>25% but <99% by volume)	X	S/P	2	2G	Cont	No	-	-	Yes	C	T	ABC	No	15.12, 1517, 1519.6
Bio-fuel blends of Gasoline and Ethyl alcohol (>25% but <99% by volume)	X	S/P	2	2G	Cont	No	T3	IIA	No	R	FT	AC	No	15.12, 1517, 1519.6
Bis (2-ethylhexyl) terephthalate	Y	S/P	2	2G	Open	No			Yes	O	No	ABC	No	1519.6, 16.2.6
Brake fluid base mix: Poly(2-8)alkylene (C2-C3) glycols/Polyalkylene (C2-C10) glycols monoalkyl (C1-C4) ethers and their borate esters	Z	P	3	2G	Open	No	-	-	Yes	O	No	AC	No	
Bromochloromethane	Z	P	3	2G	Open	No			NF	O	No	No	No	
Butene oligomer	X	P	2	2G	Cont	No	T4	IIB	No	R	F	ABC	No	1519.6
2-Butoxyethanol (58%)/Hyperbranched polyesteramide (42%) (mixture)	Y	S/P	2	2G	Cont	No			Yes	C	T	AC	No	15.12.3, 15.12.4, 1519
Butyl acetate (all isomers)	Y	P	3	2G	Cont	No	T2	IIA	No	R	F	AC	No	1519.6
Butyl acrylate (all isomers)	Y	S/P	3	2G	Cont	No	T2	IIB	No	R	F	ABC	No	15.13, 1519.6, 16.6.1, 16.6.2
tert-Butyl alcohol	Z	P	3	2G	Cont	No	T1	IIA	No	R	F	AC	No	1519.6
Butylamine (all isomers)	Y	S/P	2	2G	Cont	No	T2	IIA	No	C	FT	AC	Yes	15.12, 1517, 1519

a	c	d	e	f	g	h	i'	i"	i"'	j	k	l	n	o
Butylbenzene (all isomers)	X	S/P	2	2G	Cont	No	T2	IIA	No	R	FT	ABC	No	15.12.3, 15.12.4, 1519.6
Butyl benzyl phthalate	X	S/P	2	2G	Cont	No			Yes	C	T	AC	No	15.12, 1517, 1519.6
Butyl butyrate (all isomers)	Y	S/P	3	2G	Cont	No	T1	IIA	No	R	F	ABC	No	1519.6
Butyl/Decyl/Cetyl/Eicosyl methacrylate mixture	Y	S/P	2	2G	Open	No	T3	IIA	No	R	F	ABC	No	15.13, 1519.6, 16.6.1, 16.6.2
Butylene glycol	Z	S/P	3	2G	Open	No			Yes	O	No	AC	No	
1,2-Butylene oxide	Y	S/P	3	2G	Cont	Inert	T2	IIB	No	C	FT	AC	No	15.8.1 to 15.8.7, 15.8.12, 15.8.13, 15.8.16, 15.8.17, 15.8.18, 15.8.19, 15.8.21, 15.8.25, 15.8.27, 15.8.29, 15.12, 1517, 1519.6
n-Butyl ether	Y	S/P	3	2G	Cont	Inert	T4	IIB	No	R	F	AC	No	15.4.6, 1519
Butyl methacrylate	Z	S/P	3	2G	Cont	No	T3	IIA	No	R	F	ABC	No	15.13, 1519.6, 16.6.1, 16.6.2
n-Butyl propionate	Y	P	3	2G	Cont	No	T2	IIA	No	R	F	ABC	No	1519.6
Butyraldehyde (all isomers)	Y	S/P	3	2G	Cont	No	T3	IIA	No	R	F	AC	No	1519.6
Butyric acid	Y	S/P	3	2G	Cont	No			Yes	O	No	AC	No	1511.2, 1511.3, 1511.4, 1511.6, 1511.7, 1511.8, 1519.6
gamma-Butyrolactone	Y	S/P	3	2G	Cont	No			Yes	C	T	ABC	No	15.12, 1517, 1519.6
Calcium alkaryl sulphonate (C11-C50)	Z	S/P	3	2G	Open	No	-	-	Yes	O	No	ABC	No	
Calcium alkyl (C10-C28) salicylate	Y	S/P	2	2G	Cont	No	-	-	Yes	R	T	ABC	No	15.12.3, 15.12.4, 1519.6, 16.2.9
Calcium hydroxide slurry	Y	S/P	2	2G	Cont	No	-	-	Yes	R	T	AC	No	15.12.3, 15.12.4, 1519.6,16.2.9
Calcium hypochlorite solution (15% or less)	Y	S/P	2	2G	Cont	No			NF	R	T	No	No	15.12.3, 15.12.4, 1519.6
Calcium hypochlorite solution (more than 15%)	X	S/P	1	2G	Cont	No			NF	R	T	No	No	15.12.3, 15.12.4, 1519
Calcium lignosulphonate solutions	Z	P	3	2G	Open	No	-	-	NF	O	No	No	No	16.2.9
Calcium long-chain alkyl (C5-C10) phenate	Y	P	3	2G	Open	No			Yes	O	No	AC	No	1519.6
Calcium long-chain alkyl (C11-C40) phenate	Y	S/P	2	2G	Open	No	-	-	Yes	O	No	ABC	No	1519.6, 16.2.6
Calcium long-chain alkyl phenate sulphide (C8-C40)	Y	S/P	2	2G	Open	No			Yes	O	No	ABC	No	1519.6, 16.2.6
Calcium long-chain alkyl salicylate (C13+)	Y	S/P	2	2G	Open	No			Yes	O	No	ABC	No	1519.6, 16.2.6, 16.2.9
Calcium long-chain alkyl (C18-C28) salicylate	Y	S/P	2	2G	Open	No	-	-	Yes	O	No	ABC	No	1519.6, 16.2.6, 16.2.9
Calcium nitrate/Magnesium nitrate/Potassium chloride solution	Z	S/P	3	2G	Open	No	-	-	NF	O	No	No	No	16.2.9
Calcium nitrate solution (50% or less)	Z	S	3	2G	Open	No	-	-	NF	O	No	No	No	16.2.9

a	c	d	e	f	g	h	i'	i"	i"'	j	k	l	n	o
Camelina oil	Y	S/P	2(k)	2G	Open	No			Yes	O	No	ABC	No	1519.6, 16.2.6, 16.2.7
epsilon-Caprolactam (molten or aqueous solutions)	Z	S/P	3	2G	Cont	No			Yes	R	T	AC	No	15.12.3, 15.12.4, 1519.6
Carbolic oil	Y	S/P	2	2G	Cont	No			Yes	C	FT	ABC	Yes	15.12, 1517, 1519, 16.2.9
Carbon disulphide	Y	S/P	1	1G	Cont	Pad +inert	T6	IIC	No	C	FT	C	Yes	15.3, 15.12, 1517, 15.18, 1519
Carbon tetrachloride	Y	S/P	2	2G	Cont	No			NF	C	T	No	No	15.12, 1517, 1519.6
Cashew nut shell oil (untreated)	Y	S/P	2	2G	Cont	No			Yes	R	T	ABC	No	15.12.3, 15.12.4, 1519.6, 16.2.6, 16.2.7, 16.2.9
Castor oil	Y	S/P	2(k)	2G	Open	No	-	-	Yes	O	No	ABC	No	1519.6, 16.2.6, 16.2.7, 16.2.9
Cesium formate solution (*)	Y	S/P	3	2G	Open	No	-	-	NF	O	No	No	No	1519.6
Cetyl/Eicosyl methacrylate mixture	Y	S/P	2	2G	Open	No			Yes	O	No	ABC	No	15.13, 1519.6, 16.2.9, 16.6.1, 16.6.2
Chlorinated paraffins (C10-C13)	X	S/P	1	2G	Cont	No			NF	C	T	No	No	15.12, 1517, 1519, 16.2.6
Chlorinated paraffins (C14-C17) (with 50% chlorine or more, and less than 1% C13 or shorter chains)	X	S/P	1	2G	Cont	No	-	-	Yes	C	T	AC	No	15.12, 1517, 1519
Chloroacetic acid (80% or less)	Y	S/P	2	2G	Cont	No			NF	C	T	No	Yes	1511.2, 1511.3, 1511.4, 1511.6, 1511.7, 1511.8, 15.12, 1517, 15.18, 1519, 16.2.9
Chlorobenzene	Y	S/P	2	2G	Cont	No	T1	IIA	No	R	FT	ABC	No	15.12.3, 15.12.4, 1519.6
Chloroform	Y	S/P	3	2G	Cont	No			NF	C	T	No	No	15.12, 1517, 1519.6
Chlorohydrins (crude)	Y	S/P	2	2G	Cont	No	T3	IIA	No	C	FT	AC	Yes	15.12, 1517, 1519
4-Chloro-2-methylphenoxyacetic acid, dimethylamine salt solution	Y	S/P	2	2G	Cont	No			NF	R	T	No	No	15.12.3, 15.12.4, 1519.6, 16.2.9
o-Chloronitrobenzene	Y	S/P	2	2G	Cont	No			Yes	C	T	ABC	No	15.12.3, 15.12.4, 1519, 16.2.6, 16.2.9
1-(4-Chlorophenyl)-4,4-dimethyl-pentan-3-one	Y	S/P	2	2G	Open	No			Yes	O	No	ABD	No	1519.6, 16.2.6, 16.2.9
2- or 3-Chloropropionic acid	Z	S/P	2	2G	Cont	No			Yes	C	T	AC	No	1511.2, 1511.3, 1511.4, 1511.6, 1511.7, 1511.8, 15.12.3, 15.12.4, 1519, 16.2.9
Chlorosulphonic acid	Y	S/P	1	2G	Cont	No			NF	C	T	No	Yes	1511.2, 1511.3, 1511.4, 15.11.5, 1511.6, 1511.7, 1511.8, 15.12, 15.16.2, 1517, 15.18, 1519
m-Chlorotoluene	Y	S/P	2	2G	Cont	No	T4	IIA	No	R	FT	ABC	No	15.12.3, 15.12.4, 1519
o-Chlorotoluene	Y	P	2	2G	Cont	No	T1	IIA	No	R	F	ABC	No	1519.6
p-Chlorotoluene	Y	P	2	2G	Cont	No	T1	IIA	No	R	F	ABC	No	1519.6, 16.2.9
Chlorotoluenes (mixed isomers)	Y	P	2	2G	Cont	No	T4	IIA	No	R	F	ABC	No	1519.6

a	c	d	e	f	g	h	i'	i"	i"'	j	k	l	n	o
Choline chloride solutions	Z	P	3	2G	Open	No			Yes	O	No	AC	No	
Citric acid (70% or less)	Z	S/P	3	2G	Cont	No			Yes	C	T	AC	Yes	15.12, 1517, 1519
Coal tar	X	S/P	2	2G	Cont	No	T2	IIA	Yes	C	T	BD	No	15.12, 1517, 1519.6, 16.2.6, 16.2.9
Coal tar naphtha solvent	Y	S/P	2	2G	Cont	No	T3	IIA	No	C	FT	ABC	No	15.12, 1517, 1519.6, 16.2.9
Coal tar pitch (molten) (*)	X	S/P	2	1G	Cont	No	T2	IIA	Yes	C	T	ABC D	No	15.12, 1517, 1519.6, 16.2.6, 16.2.9
Cocoa butter	Y	S/P	2(k)	2G	Open	No	-	-	Yes	O	No	ABC	No	1519.6, 16.2.6, 16.2.7, 16.2.9
Coconut oil	Y	S/P	2(k)	2G	Open	No	-	-	Yes	O	No	ABC	No	1519.6, 16.2.6, 16.2.7, 16.2.9
Coconut oil fatty acid	Y	S/P	2	2G	Open	No	-	-	Yes	O	No	ABC	No	1519.6, 16.2.6, 16.2.7, 16.2.9
Coconut oil fatty acid methyl ester	Y	P	2	2G	Open	No	-	-	Yes	O	No	ABC	No	1519.6
Copper salt of long chain (C17+) alkanoic acid	Y	P	2	2G	Open	No	-	-	Yes	O	No	ABC	No	1519.6, 16.2.6, 16.2.9
Corn Oil	Y	S/P	2(k)	2G	Open	No	-	-	Yes	O	No	ABC	No	1519.6, 16.2.6, 16.2.7, 16.2.9
Cotton seed oil	Y	S/P	2(k)	2G	Open	No	-	-	Yes	O	No	ABC	No	1519.6, 16.2.6, 16.2.7, 16.2.9
Creosote (coal tar)	X	S/P	1	2G	Cont	No	T2	IIA	Yes	C	T	AD	No	15.12, 1517, 1519.6, 16.2.6, 16.2.9
Cresols (all isomers)	Y	S/P	1	2G	Cont	No	T1	IIA	Yes	C	T	ABC	Yes	15.12, 15.18, 1519, 16.2.9
Cresol/Phenol/Xylenol mixture	Y	S/P	2	2G	Cont	No			Yes	C	T	AC	Yes	15.12, 1517, 1519
Cresylic acid, dephenolized	Y	S/P	2	2G	Cont	No			Yes	C	T	ABC	Yes	15.12, 1517, 1519
Cresylic acid, sodium salt solution	Y	S/P	2	2G	Cont	No	T4	IIB	No	C	FT	AC	Yes	15.12, 1517, 1519, 16.2.9
Crotonaldehyde	X	S/P	1	1G	Cont	No	T3	IIB	No	C	FT	AC	Yes	15.12, 1517, 15.18, 1519
1,5,9-Cyclododecatriene	X	S/P	2	2G	Open	No			Yes	O	No	AC	No	15.13, 1519.6, 16.6.1, 16.6.2
Cycloheptane	X	S/P	2	2G	Cont	No	T4	IIA	No	R	F	AC	No	1519.6
Cyclohexane	Y	S/P	2	2G	Cont	No	T3	IIA	No	R	F	AC	No	1519.6, 16.2.9
Cyclohexane-1,2-dicarboxylic acid, diisononyl ester	Y	S/P	2	2G	Open	No			Yes	O	No	ABC	No	1519.6, 16.2.6
Cyclohexane oxidation products, sodium salts solution	Z	P	3	2G	Open	No			NF	O	No	No	No	
Cyclohexanol	Y	P	2	2G	Open	No			Yes	O	No	ABC	No	1519.6, 16.2.9
Cyclohexanone	Z	S/P	3	2G	Cont	No	T2	IIA	No	R	F	AC	No	1519.6
Cyclohexanone, Cyclohexanol mixture	Y	S/P	3	2G	Cont	No			Yes	R	F	AC	No	1519.6
Cyclohexyl acetate	Y	S/P	3	2G	Cont	No	T2	IIA	No	R	FT	AC	No	15.12.3, 15.12.4, 1519.6
Cyclohexylamine	Y	S/P	3	2G	Cont	No	T3	IIA	No	C	FT	AC	Yes	15.12, 1517, 1519

a	c	d	e	f	g	h	i'	i"	i"'	j	k	l	n	o
1,3-Cyclopentadiene dimer (molten)	Y	S/P	2	2G	Cont	No	T1	IIB	No	R	FT	AC	No	15.12.3, 15.12.4, 1519, 16.2.6, 16.2.9
Cyclopentane	Y	P	2	2G	Cont	No	T2	IIA	No	R	F	AC	No	1519.6
Cyclopentene	Y	S/P	3	2G	Cont	No	T2	IIA	No	R	F	AC	No	1519.6
p-Cymene	Y	S/P	2	2G	Cont	No	T2	IIA	No	R	F	AC	No	1519.6
Decahydronaphthalene	Y	S/P	2	2G	Cont	No	T3	IIA	No	R	FT	ABC	No	15.12.3, 15.12.4, 1519.6
Decanoic acid	X	S/P	2	2G	Cont	No			Yes	R	T	AC	No	15.12.3, 15.12.4, 1519.6, 16.2.9
Decene	X	P	2	2G	Cont	No	T3	IIA	No	R	F	AC	No	1519.6
Decyl acrylate	X	S/P	1	2G	Cont	No	-	-	Yes	R	T	ABC	No	15.12.3, 15.12.4, 15.13, 1519, 16.6.1, 16.6.2
Decyl alcohol (all isomers)	Y	P	2	2G	Open	No			Yes	O	No	AC	No	1519.6, 16.2.9(e)
Decyl/Dodecyl/Tetradecyl alcohol mixture	Y	S/P	2	2G	Cont	No	-	-	Yes	R	T	ABC	No	15.12.3, 15.12.4, 1519.6, 16.2.9
Decyloxytetrahydrothiophene dioxide	X	S/P	2	2G	Open	No			Yes	O	No	AC	No	1519.6, 16.2.9
Diacetone alcohol	Z	S/P	3	2G	Cont	No	T1	IIA	No	R	FT	AC	No	15.12.3, 15.12.4, 1519.6
Dialkyl (C8-C9) diphenylamines	Z	P	3	2G	Open	No			Yes	O	No	ABC	No	
Dialkyl (C7-C13) phthalates	X	S/P	2	2G	Cont	No			Yes	C	T	ABC	No	15.12, 1517, 1519.6, 16.2.6
Dialkyl (C9-C10) phthalates	Y	S/P	2	2G	Open	No	-	-	Yes	O	No	ABC	No	1519.6, 16.2.6
Dialkyl thiophosphates sodium salts solution	Y	S/P	2	2G	Cont	No	-	-	Yes	R	T	AC	No	15.12.3, 15.12.4, 1519.6, 16.2.9
2,6-Diaminohexanoic acid phosphonate mixed salts solution	Z	S/P	3	2G	Cont	No			NF	R	No	No	No	15.11, 1517, 1519.6
Dibromomethane	Y	S/P	2	2G	Open	No			NF	O	No	No	No	1519.6
Dibutylamine	Y	S/P	2	2G	Cont	No	T2	IIA	No	C	FT	ABC	Yes	15.12, 1517, 1519
Dibutyl hydrogen phosphonate	Y	S/P	2	2G	Cont	No			Yes	C	T	AC	Yes	15.12, 1517, 1519, 16.2.9
2,6-Di-tert-butylphenol	X	S/P	2	2G	Open	No	-	-	Yes	O	No	ABC	No	1519.6, 16.2.9
Dibutyl phthalate	X	S/P	2	2G	Cont	No			Yes	C	T	AC	No	15.12, 1517, 1519.6
Dibutyl terephthalate	Y	P	2	2G	Open	No	-	-	Yes	O	No	ABC	No	1519.6, 16.2.9
Dichlorobenzene (all isomers)	X	S/P	2	2G	Cont	No	T1	IIA	Yes	C	T	ABD	No	15.12, 1517, 1519.6
3,4-Dichloro-1-butene	Y	S/P	2	2G	Cont	No	T1	IIA	No	R	FT	ABC	No	15.12.3, 15.12.4, 1519.6
1,1-Dichloroethane	Z	S/P	3	2G	Cont	No	T2	IIA	No	R	F	AC	No	1519.6
Dichloroethyl ether	Y	S/P	2	2G	Cont	No	T2	IIA	No	C	FT	AC	Yes	15.12, 1517, 15.18, 1519
1,6-Dichlorohexane	Y	P	2	2G	Open	No	-	-	Yes	O	No	ABC	No	1519.6
2,2'-Dichloroisopropyl ether	Y	S/P	2	2G	Cont	No			Yes	R	T	ABC	No	15.12.3, 15.12.4, 1519
Dichloromethane	Y	S/P	3	2G	Cont	No	T1	IIA	No	C	FT	ABC	No	15.12, 1517, 1519.6
2,4-Dichlorophenol	Y	S/P	2	2G	Cont	Dry			Yes	C	T	AD	Yes	15.12, 15.16.2, 1517, 1519, 16.2.6, 16.2.9

a	c	d	e	f	g	h	i'	i"	i"'	j	k	l	n	o
2,4-Dichlorophenoxyacetic acid, diethanolamine salt solution	Y	S/P	3	2G	Cont	No			NF	C	T	No	Yes	15.12, 1517, 1519, 16.2.9
2,4-Dichlorophenoxyacetic acid, dimethylamine salt solution (70% or less)	Y	S/P	3	2G	Cont	No			NF	C	T	No	Yes	15.12, 1517, 1519, 16.2.9
2,4-Dichlorophenoxyacetic acid, triisopropanolamine salt solution	Y	S/P	3	2G	Cont	No			NF	C	T	No	Yes	15.12, 1517, 1519, 16.2.6, 16.2.9
1,1-Dichloropropane	Y	S/P	2	2G	Cont	No	T1	IIA	No	R	F	ABC	No	1519.6
1,2-Dichloropropane	Y	S/P	3	2G	Cont	No	T1	IIA	No	R	FT	ABC	No	15.12.3, 15.12.4, 1519.6
1,3-Dichloropropene	X	S/P	2	2G	Cont	No	T2	IIA	No	C	FT	ABC	Yes	15.12, 1517, 1519
Dichloropropene/Dichloropropane mixtures	X	S/P	2	2G	Cont	No	T2	IIA	No	C	FT	ABD	No	15.12, 1517, 1519
2,2-Dichloropropionic acid	Y	S/P	2	2G	Cont	Dry			Yes	C	T	AD	Yes	1511.2, 1511.4, 1511.6, 1511.7, 1511.8, 15.12, 15.16.2, 1517, 1519, 16.2.9
Dicyclopentadiene, Resin Grade, 81-89%	Y	S/P	2	2G	Cont	Inert	T2	IIB	No	C	FT	ABC	Yes	15.12, 15.13, 1517, 1519
Diethanolamine	Y	S/P	3	2G	Cont	No	T1	IIA	Yes	C	T	AC	No	15.12, 1517, 1519.6, 16.2.6, 16.2.9
Diethylamine	Y	S/P	3	2G	Cont	No	T2	IIA	No	C	FT	AC	Yes	15.12, 1517, 1519
Diethylaminoethanol	Y	S/P	2	2G	Cont	No	T2	IIA	No	R	FT	AC	No	15.12.3, 15.12.4, 1519.6
2,6-Diethylaniline	Y	S/P	2	2G	Cont	No			Yes	R	T	ABC	No	15.12.3, 15.12.4, 1519.6, 16.2.9
Diethylbenzene	Y	S/P	2	2G	Cont	No	T2	IIA	No	R	FT	AC	No	15.12.3, 15.12.4, 1519.6
Diethylene glycol	Z	S/P	3	2G	Cont	No			Yes	R	T	AC	No	15.12.3, 15.12.4, 1519.6
Diethylene glycol dibutyl ether	Z	S/P	3	2G	Open	No	-	-	Yes	O	No	AC	No	
Diethylene glycol diethyl ether	Z	S/P	3	2G	Cont	No	-	-	Yes	R	T	AC	No	15.12.3, 15.12.4, 1519.6
Diethylene glycol phthalate	Y	S/P	3	2G	Cont	No	-	-	Yes	R	T	AC	No	15.12.3, 15.12.4, 1519.6, 16.2.6
Diethylenetriamine	Y	S/P	3	2G	Cont	No	-	-	Yes	C	T	ABC	No	15.12, 1517, 1519
Diethylenetriaminepentaacetic acid, pentasodium salt solution	Z	P	3	2G	Open	No	-	-	Yes	O	No	AC	No	
Diethyl ether (*)	Z	S/P	2	1G	Cont	Inert	T4	IIB	No	R	F	AC	No	15.4, 15.14, 1519
Di-(2-ethylhexyl) adipate	Y	S/P	2	2G	Cont	No			Yes	C	T	ABC	No	15.12, 1517, 1519.6
Di-(2-ethylhexyl) phosphoric acid	Y	S/P	2	2G	Cont	No			Yes	R	T	AD	No	15.12.3, 15.12.4, 1519.6
Diethyl phthalate	Y	S/P	2	2G	Open	No			Yes	O	No	AC	No	1519.6
Diethyl sulphate	Y	S/P	2	2G	Cont	No			Yes	C	T	AC	Yes	15.12, 1517, 1519
Diglycidyl ether of bisphenol A	X	S/P	2	2G	Cont	No			Yes	R	T	AC	No	15.12.3, 15.12.4, 1519.6, 16.2.6, 16.2.9
Diglycidyl ether of bisphenol F	Y	S/P	2	2G	Cont	No			Yes	C	T	AC	No	15.12, 1517, 1519.6, 16.2.6
Diheptyl phthalate	Y	S/P	2	2G	Open	No			Yes	O	No	ABC	No	1519.6

a	c	d	e	f	g	h	i'	i"	i"'	j	k	l	n	o
Di-n-hexyl adipate	X	S/P	1	2G	Open	No			Yes	O	No	AC	No	1519
Dihexyl phthalate	Y	S/P	2	2G	Cont	No			Yes	C	T	ABC	No	15.12, 1517, 1519.6
Diisobutylamine	Y	S/P	2	2G	Cont	No	T4	IIB	No	C	FT	ABC	No	15.12.3, 15.12.4, 1519
Diisobutylene	Y	P	2	2G	Cont	No	T2	IIA	No	R	F	AC	No	1519.6
Diisobutyl ketone	Y	S/P	3	2G	Cont	No	T2	IIA	No	R	FT	AC	No	15.12.3, 15.12.4, 1519.6
Diisobutyl phthalate	X	S/P	2	2G	Cont	No			Yes	C	T	AC	No	15.12, 1517, 1519.6
Diisononyl adipate	Y	S/P	2	2G	Open	No	-	-	Yes	O	No	AC	No	1519.6
Diisooctyl phthalate	Y	S/P	2	2G	Open	No			Yes	O	No	ABC	No	1519.6, 16.2.6
Diisopropanolamine	Z	P	3	2G	Open	No	-	-	Yes	O	No	AC	No	16.2.9
Diisopropylamine	Y	S/P	3	2G	Cont	No	T2	IIA	No	R	FT	AC	No	15.12.3, 15.12.4, 1517, 1519.6
Diisopropylbenzene (all isomers)	X	S/P	2	2G	Cont	No			Yes	R	T	AC	No	15.12.3, 15.12.4, 1519.6
Diisopropylnaphthalene	Y	S/P	2	2G	Open	No	-	-	Yes	O	No	AC	No	1519.6
N,N-Dimethylacetamide	Z	S/P	3	2G	Cont	No	-	-	Yes	R	T	AC	No	15.12.3, 15.12.4, 1519.6
N,N-Dimethylacetamide solution (40% or less)	Z	S/P	3	2G	Cont	No			NF	R	T	No	No	15.12.3, 15.12.4, 1519.6
Dimethyl adipate	Y	P	2	2G	Open	No			Yes	O	No	ABC	No	1519.6, 16.2.9
Dimethylamine solution (45% or less)	Y	S/P	3	2G	Cont	No	T2	IIA	No	R	FT	AC	No	15.12.3, 15.12.4, 1519
Dimethylamine solution (greater than 45% but not greater than 55%)	Y	S/P	3	2G	Cont	No	T2	IIB	No	R	FT	AC	No	15.12.3, 15.12.4, 1519
Dimethylamine solution (greater than 55% but not greater than 65%)	Y	S/P	3	2G	Cont	No	T2	IIB	No	R	FT	AC	No	15.12.3, 15.12.4, 15.14, 1519
N,N-Dimethylcyclohexylamine	Y	S/P	2	2G	Cont	No	T3	IIB	No	C	FT	AC	Yes	15.12, 1517, 1519
Dimethyl disulphide	Y	S/P	2	2G	Cont	No	T3	IIA	No	R	FT	ABC	No	15.12.3, 15.12.4, 1519.6
N,N-Dimethyldodecylamine	Y	S/P	2	2G	Cont	No			Yes	C	T	ABC	Yes	15.12, 1517, 1519
Dimethylethanolamine	Y	S/P	3	2G	Cont	No	T3	IIA	No	R	FT	AC	No	15.12.3, 15.12.4, 1519.6
Dimethylformamide	Y	S/P	3	2G	Cont	No	T2	IIA	No	C	FT	AC	No	15.12, 1517, 1519.6
Dimethyl glutarate	Y	S/P	3	2G	Cont	No			Yes	R	T	AC	No	15.12.3, 15.12.4, 1519.6
Dimethyl hydrogen phosphite	Y	S/P	3	2G	Cont	No	T4	IIB	No	R	F	AC	No	1519.6
Dimethyl octanoic acid	Y	S/P	2	2G	Cont	No			Yes	R	T	AC	No	15.12.3, 15.12.4, 1519.6, 16.2.6, 16.2.9
Dimethyl phthalate	Y	S/P	3	2G	Open	No			Yes	O	No	AC	No	1519.6, 16.2.9
Dimethylpolysiloxane	Y	P	2	2G	Open	No			Yes	O	No	ABC	No	1519.6
2,2-Dimethylpropane-1,3-diol (molten or solution)	Z	P	3	2G	Open	No	-	-	Yes	O	No	ABC	No	16.2.9
Dimethyl succinate	Y	P	2	2G	Open	No			Yes	O	No	AC	No	1519.6, 16.2.9
Dinitrotoluene (molten)	X	S/P	2	2G	Cont	No			Yes	C	T	AC	No	15.12, 1517, 1519, 15.21, 16.2.6, 16.2.9, 16.6.4

a	c	d	e	f	g	h	i'	i"	i"'	j	k	l	n	o
Dinonyl phthalate	Y	S/P	2	2G	Open	No	-	-	Yes	O	No	AC	No	1519.6
Dioctyl phthalate	Y	S/P	2	2G	Open	No			Yes	O	No	ABC	No	1519.6
1,4-Dioxane	Y	S/P	3	2G	Cont	No	T2	IIB	No	C	FT	AC	No	15.12, 1517, 1519.6, 16.2.9
Dipentene	Y	S/P	2	2G	Cont	No	T3	IIA	No	C	FT	AC	No	15.12.3, 15.12.4, 1519.6
Diphenyl	X	S/P	2	2G	Open	No			Yes	O	No	ABC	No	1519.6, 16.2.6, 16.2.9
Diphenylamine (molten)	Y	S/P	2	2G	Open	No	-	-	Yes	O	No	ABC	No	1519.6, 16.2.6, 16.2.9
Diphenylamine, reaction product with 2,2,4-Trimethylpentene	Y	S/P	2	2G	Open	No			Yes	O	No	AC	No	1519, 16.2.6
Diphenylamines, alkylated	Y	S/P	2	2G	Open	No			Yes	O	No	AC	No	1519, 16.2.6, 16.2.9
Diphenyl/Diphenyl ether mixtures	X	S/P	2	2G	Open	No			Yes	O	No	ABC	No	1519.6, 16.2.9
Diphenyl ether	X	P	2	2G	Open	No			Yes	O	No	AC	No	1519.6, 16.2.9
Diphenyl ether/Diphenyl phenyl ether mixture	X	P	2	2G	Open	No			Yes	O	No	AC	No	1519.6, 16.2.9
Diphenylmethane diisocyanate	Y	S/P	2	2G	Cont	Dry	-	-	Yes (a)	C	T(a)	AB(b) D	Yes	15.12, 15.16.2, 1517, 1519, 16.2.6, 16.2.9
Diphenylol propane-epichlorohydrin resins	X	S/P	2	2G	Cont	No			Yes	R	T	AC	No	15.12.3, 15.12.4, 1519.6, 16.2.6, 16.2.9
Di-n-propylamine	Y	S/P	2	2G	Cont	No	T3	IIB	No	C	FT	AC	Yes	15.12.3, 15.12.4, 1517, 1519.6
Dipropylene glycol	Z	P	3	2G	Open	No			Yes	O	No	AC	No	
Dithiocarbamate ester (C7-C35)	X	S/P	2	2G	Open	No			Yes	O	No	ABC	No	1519.6
Ditridecyl adipate	Y	S/P	2	2G	Cont	No	-	-	Yes	R	T	AC	No	15.12.3, 15.12.4, 1519.6, 16.2.6
Ditridecyl phthalate	Y	S/P	2	2G	Open	No	-	-	Yes	O	No	AC	No	1519.6
Diundecyl phthalate	Y	S/P	2	2G	Open	No			Yes	O	No	ABC	No	1519.6, 16.2.6, 16.2.9
Dodecane (all isomers)	Y	S/P	2	2G	Cont	No	T3	IIA	No	R	F	ABC	No	1519.6
tert-Dodecanethiol	Y	S/P	3	2G	Cont	No			Yes	R	T	ABC	No	15.12.3, 15.12.4, 1519.6
1-Dodecene	Y	S/P	3	2G	Open	No			Yes	O	No	ABC	No	1519.6
Dodecene (all isomers)	X	S/P	2	2G	Cont	No			Yes	R	T	ABC	No	15.12.3, 15.12.4, 1519.6
Dodecyl alcohol	Y	S/P	2	2G	Open	No			Yes	O	No	AC	No	1519.6, 16.2.9
n-Dodecyl mercaptan	X	S/P	1	2G	Cont	No			Yes	C	T	ABC	Yes	15.12, 1517, 1519
Dodecylamine/Tetradecylamine mixture	Y	S/P	2	2G	Cont	No			Yes	C	T	ABC	Yes	15.12, 1517, 1519, 16.2.9
Dodecylbenzene	Y	S/P	2	2G	Cont	No	-	-	Yes	R	T	ABC	No	15.12.3, 15.12.4, 1519.6
Dodecyl diphenyl ether disulphonate solution	X	S/P	2	2G	Cont	No			NF	C	T	No	Yes	15.12, 1517, 1519, 16.2.6
Dodecyl hydroxypropyl sulphide	X	P	2	2G	Open	No			Yes	O	No	AC	No	1519.6
Dodecyl methacrylate	Y	S/P	3	2G	Open	No			Yes	O	No	AC	No	15.13, 1519.6
Dodecyl/Octadecyl methacrylate mixture	Y	S/P	2	2G	Open	No	-	-	Yes	O	No	AC	No	15.13, 1519.6, 16.2.6, 16.6.1, 16.6.2

a	c	d	e	f	g	h	i'	i"	i"'	j	k	l	n	o
Dodecyl/Pentadecyl methacrylate mixture	Y	S/P	2	2G	Open	No			Yes	O	No	ABC	No	15.13, 1519.6, 16.6.1, 16.6.2
Dodecyl phenol	X	S/P	2	2G	Cont	No			Yes	C	T	AC	Yes	15.12, 1517, 1519, 16.2.6
Dodecyl Xylene	Y	S/P	2	2G	Open	No			Yes	O	No	ABC	No	1519.6, 16.2.6
Drilling brines (containing zinc chloride)	X	S/P	2	2G	Open	No			NF	O	No	No	Yes	1519.6
Drilling brines (containing calcium bromide)	Z	S/P	3	2G	Open	No			NF	O	No	No	No	1519.6
Epichlorohydrin	Y	S/P	2	2G	Cont	No	T2	IIB	No	C	FT	AC	Yes	15.12, 1517, 1519
Ethanolamine	Y	S/P	3	2G	Cont	No	T2	IIA	Yes	C	FT	AC	Yes	15.12, 1517, 1519, 16.2.9
2-Ethoxyethyl acetate	Y	S/P	3	2G	Cont	No	T2	IIA	No	C	FT	AC	No	15.12, 1517, 1519.6
Ethoxylated long chain (C16+) alkyloxyalkylamine	Y	S/P	2	2G	Cont	No	-	-	Yes	C	T	ABC	Yes	15.12, 1517, 1519, 16.2.9
Ethoxylated tallow amine ()95%)	X	S/P	2	2G	Cont	Inert	-	-	Yes	C	T	ABC	Yes	15.12, 1517, 1519, 16.2.6, 16.2.9
Ethyl acetate	Z	S/P	3	2G	Cont	No	T2	IIA	No	R	F	ABC	No	1519.6
Ethyl acetoacetate	Z	S/P	3	2G	Open	No			Yes	O	No	AC	No	
Ethyl acrylate	Y	S/P	2	2G	Cont	No	T2	IIB	No	C	FT	AC	No	15.12, 15.13, 1517, 1519, 16.6.1, 16.6.2
Ethylamine (*)	Y	S/P	2	1G	Cont	No	T2	IIA	No	C	F	AC	No	15.12.3.2, 15.14, 1519
Ethylamine solutions (72% or less)	Y	S/P	3	2G	Cont	No	T2	IIA	No	C	F	AC	No	15.12.3.2, 15.14, 1519
Ethyl amyl ketone	Y	S/P	2	2G	Cont	No	T2	IIA	No	R	FT	AC	No	15.12.3, 15.12.4, 1519.6
Ethylbenzene	Y	S/P	2	2G	Cont	No	T2	IIA	No	C	FT	AC	No	15.12, 1517, 1519.6
Ethyl tert-butyl ether	Y	S/P	2	2G	Cont	No	T2	IIB	No	R	FT	AC	No	15.12.3, 15.12.4, 1519.6
Ethyl butyrate	Y	S/P	2	2G	Cont	No	T2	IIA	No	R	FT	AC	No	15.12.3, 15.12.4, 1519.6
Ethylcyclohexane	Y	S/P	2	2G	Cont	No	T3	IIA	No	R	F	AC	No	1519.6
N-Ethylcyclohexylamine	Y	S/P	2	2G	Cont	No	T3	IIB	No	C	FT	AC	No	15.12.3, 15.12.4, 1519
S-Ethyl dipropylthiocarbamate	Y	S/P	2	2G	Cont	No			Yes	C	T	AC	No	15.12, 1517, 1519.6, 16.2.9
Ethylene carbonate	Z	S/P	3	2G	Cont	No			Yes	R	T	AC	No	15.12.3, 15.12.4, 1519.6, 16.2.9
Ethylene chlorohydrin	Y	S/P	1	2G	Cont	No	T2	IIA	No	C	FT	AC	Yes	15.12, 1517, 15.18, 1519
Ethylene cyanohydrin	Y	S/P	2	2G	Cont	No		IIB	Yes	R	T	AC	No	15.12.3, 15.12.4, 1519.6
Ethylenediamine	Y	S/P	2	2G	Cont	No	T2	IIA	No	C	FT	AC	Yes	15.12, 1517, 1519, 16.2.9
Ethylenediaminetetraacetic acid, tetrasodium salt solution	Y	S/P	3	2G	Cont	No	-	-	Yes	R	T	AC	No	15.12.3, 15.12.4, 1519.6
Ethylene dibromide	Y	S/P	2	2G	Cont	No			NF	C	T	No	No	15.12, 1517, 1519, 16.2.9
Ethylene dichloride	Y	S/P	3	2G	Cont	No	T2	IIA	No	C	FT	ABC	No	15.12, 1517, 1519
Ethylene glycol	Z	S/P	3	2G	Open	No			Yes	O	No	AC	No	1519.6
Ethylene glycol acetate	Y	S/P	3	2G	Cont	No	-	-	Yes	C	T	AC	Yes	15.12, 1517, 1519
Ethylene glycol butyl ether acetate	Y	S/P	3	2G	Open	No			Yes	O	No	AC	No	1519.6

a	c	d	e	f	g	h	i'	i"	i"'	j	k	l	n	o
Ethylene glycol diacetate	Y	S/P	2	2G	Open	No			Yes	O	No	AC	No	1519.6
Ethylene glycol methyl ether acetate	Y	S/P	3	2G	Cont	No			Yes	C	T	AC	No	15.12, 1517, 1519.6
Ethylene glycol monoalkyl ethers	Y	S/P	3	2G	Cont	No	T2	IIB	No	C	FT	AC	No	15.12.3, 15.12.4, 1519, 16.2.9
Ethylene glycol phenyl ether	Z	S/P	3	2G	Open	No	-	-	Yes	O	No	AC	No	16.2.9
Ethylene glycol phenyl ether/Diethylene glycol phenyl ether mixture	Z	S/P	3	2G	Cont	No	-	-	Yes	R	T	AC	No	15.12.3, 15.12.4, 1519.6, 16.2.9
Ethylene glycol (>75%)/sodium alkyl carboxylates/borax mixture	Y	S/P	3	2G	Cont	No			Yes	C	T	AC	No	15.12, 1517, 1519.6
Ethylene glycol (>85%)/sodium alkyl carboxylates mixture	Z	S/P	3	2G	Open	No	-	-	Yes	O	No	AC	No	1519.6
Ethylene oxide/Propylene oxide mixture with an ethylene oxide content of not more than 30% by mass	Y	S/P	2	1G	Cont	Inert	T2	IIB	No	C	FT	AC	Yes	15.8, 15.12, 15.14, 1517, 1519
Ethylene-vinyl acetate copolymer (emulsion)	Y	S/P	3	2G	Cont	No	-	-	Yes	R	T	AC	No	15.12.3, 15.12.4, 1519.6, 16.2.6, 16.2.9
Ethyl-3-ethoxypropionate	Y	P	2	2G	Cont	No	T2	IIA	No	R	F	AC	No	1519.6
2-Ethylhexanoic acid	Y	S/P	3	2G	Cont	No			Yes	R	T	ABC	No	15.12.3, 15.12.4, 1519.6
2-Ethylhexyl acrylate	Y	S/P	3	2G	Cont	No	-	-	Yes	R	T	ABC	No	15.12.3, 15.12.4, 15.13, 1519.6, 16.6.1, 16.6.2
2-Ethylhexylamine	Y	S/P	2	2G	Cont	No	T3	IIA	No	C	FT	AC	Yes	15.12, 1517, 1519.6
2-Ethyl-2-(hydroxymethyl) propane-1,3-diol (C8-C10) ester	Y	P	2	2G	Open	No			Yes	O	No	ABC	No	1519.6, 16.2.6, 16.2.9
Ethylidene norbornene	Y	S/P	2	2G	Cont	No	T3	IIB	No	R	FT	ABC	No	15.12.3, 15.12.4, 1519.6
Ethyl methacrylate	Y	S/P	3	2G	Cont	No	T2	IIA	No	R	F	ABC	No	15.13, 1519.6, 16.6.1, 16.6.2
N-Ethylmethylallylamine	Y	S/P	2	2G	Cont	No	T2	IIB	No	C	FT	AC	No	15.12.3, 15.12.4, 1519
Ethyl propionate	Y	S/P	3	2G	Cont	No	T1	IIA	No	R	FT	AC	No	15.12.3, 15.12.4, 1519.6
2-Ethyl-3-propylacrolein	Y	S/P	3	2G	Cont	No	T3	IIA	No	R	F	AC	No	1519.6, 16.2.9
Ethyl toluene	Y	P	2	2G	Cont	No	T1	IIA	No	R	F	ABC	No	1519.6
Fatty acid (saturated C13+)	Y	S/P	2	2G	Open	No			Yes	O	No	ABC	No	1519.6, 16.2.9
Fatty acid methyl esters (m)	Y	S/P	2	2G	Cont	No	-	-	Yes	R	T	ABC	No	15.12.3, 15.12.4, 1519.6, 16.2.6, 16.2.9
Fatty acids, (C8-C10)	Y	S/P	2	2G	Cont	No	-	-	Yes	C	T	ABC	Yes	15.12, 1517, 1519, 16.2.6, 16.2.9
Fatty acids, (C12+)	Y	S/P	2	2G	Open	No	-	-	Yes	O	No	ABC	No	1519.6, 16.2.6, 16.2.7, 16.2.9
Fatty acids, (C16+)	Y	P	2	2G	Open	No	-	-	Yes	O	No	ABC	No	1519.6, 16.2.6
Fatty acids, essentially linear (C6-C18) 2-ethylhexyl ester	Y	S/P	2	2G	Open	No			Yes	O	No	ABC	No	1519.6

a	c	d	e	f	g	h	i'	i"	i"'	j	k	l	n	o
Ferric chloride solutions	Y	S/P	3	2G	Cont	No			NF	C	T	No	Yes	15.11, 15.12, 1517, 1519, 16.2.9
Ferric nitrate/Nitric acid solution	Y	S/P	2	2G	Cont	No			NF	C	T	No	Yes	15.11, 15.12, 1517, 1519
Fish oil	Y	S/P	2(k)	2G	Open	No	-	-	Yes	O	No	ABC	No	1519.6, 16.2.6, 16.2.7, 16.2.9
Fish silage protein concentrate (containing 4% or less formic acid)	Y	P	2	2G	Open	No			NF	O	No	No	No	1519.6, 16.2.6
Fish protein concentrate (containing 4% or less formic acid)	Z	P	3	2G	Open	No	-	-	NF	O	No	No	No	
Fluorosilicic acid solution (20-30%)	Y	S/P	3	2G	Cont	No			NF	C	T	No	Yes	15.11, 15.12, 1517, 1519
Formaldehyde solutions (45% or less)	Y	S/P	3	2G	Cont	No	T2	IIB	No	C	FT	AC	Yes	15.12, 1517, 1519, 16.2.9
Formamide	Y	S/P	3	2G	Cont	No			Yes	C	T	AC	No	15.12, 1517, 1519.6, 16.2.9
Formic acid (85% or less acid)	Y	S/P	3	2G	Cont	No	-	-	Yes	C	T(g)	AC	Yes	1511.2, 1511.3, 1511.4, 1511.6, 1511.7, 1511.8, 15.12.3, 15.12.4, 1517, 1519, 16.2.9
Formic acid (over 85%)	Y	S/P	3	2G	Cont	No	T1	IIA	No	C	FT(g)	AC	Yes	1511.2, 1511.3, 1511.4, 1511.6, 1511.7, 1511.8, 15.12.3, 15.12.4, 1517, 1519, 16.2.9
Formic acid mixture (containing up to 18% propionic acid and up to 25% sodium formate)	Z	S/P	3	2G	Cont	No	-	-	Yes	R	T(g)	AC	No	1511.2, 1511.3, 1511.4, 1511.6, 1511.7, 1511.8, 15.12.3, 15.12.4, 1519.6
Furfural	Y	S/P	3	2G	Cont	No	T2	IIB	No	C	FT	AC	Yes	15.12, 1517, 1519
Furfuryl alcohol	Y	S/P	3	2G	Cont	No	-	-	Yes	C	T	AC	Yes	15.12, 1517, 1519
Glucitol/glycerol blend propoxylated (containing less than 10% amines)	Z	S/P	3	2G	Cont	No	-	-	Yes	R	T	ABC	No	15.12.3, 15.12.4, 1519.6
Glucitol/glycerol blend propoxylated (containing 10% or more amines)	Y	S/P	2	2G	Cont	No			Yes	R	T	ABC	No	15.12.3, 15.12.4, 1519.6, 16.2.6
Glutaraldehyde solutions (50% or less)	Y	S/P	3	2G	Cont	No			NF	C	T	No	Yes	15.12, 1517, 1519
Glycerine	Z	S	3	2G	Open	No			Yes	O	No	AC	No	16.2.9
Glycerol monooleate	Y	S/P	2	2G	Open	No	-	-	Yes	O	No	AC	No	1519.6, 16.2.6, 16.2.9
Glycerol propoxylated	Z	S/P	3	2G	Cont	No	-	-	Yes	R	T	ABC	No	15.12.3, 15.12.4, 1519.6
Glycerol, propoxylated and ethoxylated	Z	P	3	2G	Open	No	-	-	Yes	O	No	ABC	No	
Glycerol/sucrose blend propoxylated and ethoxylated	Z	P	3	2G	Open	No	-	-	Yes	O	No	ABC	No	
Glyceryl triacetate	Z	S/P	3	2G	Open	No			Yes	O	No	ABC	No	1519.6
Glycidyl ester of C10 trialkylacetic acid	Y	S/P	2	2G	Cont	No			Yes	R	T	AC	No	15.12.3, 15.12.4, 1519.6
Glycine, sodium salt solution	Z	S/P	3	2G	Open	No			NF	O	No	No	No	

a	c	d	e	f	g	h	i'	i"	i"'	j	k	l	n	o
Glycolic acid solution (70% or less)	Z	S/P	3	2G	Cont	No	-	-	NF	C	T	No	Yes	15.12.3, 15.12.4, 1517, 1519, 16.2.9
Glyoxal solution (40% or less)	Y	S/P	3	2G	Cont	No			Yes	C	T	AC	Yes	15.12, 1517, 1519, 16.2.9
Glyoxylic acid solution (50% or less)	Y	S/P	3	2G	Cont	No	-	-	Yes	C	T	ACD	Yes	1511.2, 1511.3, 1511.4, 1511.6, 1511.7, 1511.8, 15.12, 1517, 1519, 16.2.9, 16.6.1, 16.6.2, 16.6.3
Glyphosate solution (not containing surfactant)	Y	S/P	2	2G	Cont	No			Yes	C	T	AC	Yes	15.12, 1517, 1519, 16.2.9
Grape Seed Oil	Y	S/P	2(k)	2G	Open	No			Yes	O	No	ABC	No	1519.6, 16.2.6, 16.2.7
Groundnut oil	Y	P	2(k)	2G	Open	No	-	-	Yes	O	No	ABC	No	1519.6, 16.2.6, 16.2.7, 16.2.9
Heptane (all isomers)	X	P	2	2G	Cont	No	T3	IIA	No	R	F	AC	No	1519.6
n-Heptanoic acid	Z	S/P	3	2G	Cont	No			Yes	R	No	ABC	No	1519.6, 1517
Heptanol (all isomers) (d)	Y	S/P	3	2G	Cont	No	T3	IIA	No	R	FT	ABC	No	15.12.3, 15.12.4, 1519.6
Heptene (all isomers)	Y	P	2	2G	Cont	No	T3	IIA	No	R	F	ABC	No	1519.6
Heptyl acetate	Y	S/P	2	2G	Cont	No			Yes	R	T	AC	No	15.12.3, 15.12.4, 1519.6
1-Hexadecylnaphthalene / 1,4-bis(hexadecyl)naphthalene mixture	Y	S/P	2	2G	Open	No			Yes	O	No	ABC	No	1519.6, 16.2.6
Hexamethylenediamine (molten)	Y	S/P	3	2G	Cont	No	-	-	Yes	C	T	AC	Yes	15.12, 1517, 1519, 16.2.9
Hexamethylenediamine adipate (50% in water)	Z	P	3	2G	Open	No			Yes	O	No	AC	No	
Hexamethylenediamine solution	Y	S/P	3	2G	Cont	No			Yes	C	T	AC	Yes	15.12, 1517, 1519
Hexamethylene diisocyanate	Y	S/P	2	2G	Cont	Dry	T1	IIB	Yes	C	T	AC(b)D	Yes	15.12, 15.16.2, 1517, 15.18, 1519
Hexamethylene glycol	Z	S/P	3	2G	Open	No			Yes	O	No	AC	No	
Hexamethyleneimine	Y	S/P	2	2G	Cont	No	T2	IIB	No	R	FT	AC	No	15.12.3, 15.12.4, 1519
Hexamethylenetetramine solutions	Z	S	3	2G	Open	No			Yes	O	No	AC	No	1519.6
Hexane (all isomers)	Y	S/P	2	2G	Cont	No	T3	IIA	No	C	FT	AC	No	15.12, 1517, 1519.6
1,6-Hexanediol, distillation overheads	Y	S/P	3	2G	Cont	No	-	-	Yes	R	T	AC	No	15.12.3, 15.12.4, 1519.6, 16.2.9
Hexanoic acid	Y	S/P	3	2G	Cont	No			Yes	C	T	ABC	Yes	15.12, 1517, 1519
Hexanol	Y	S/P	2	2G	Cont	No			Yes	C	T	ABC	Yes	15.12, 1517, 1519
Hexene (all isomers)	Y	S/P	3	2G	Cont	No	T3	IIA	No	R	F	AC	No	1519.6
Hexyl acetate	Y	S/P	2	2G	Cont	No	T2	IIA	No	R	F	AC	No	1519.6
Hexylene glycol	Z	S	3	2G	Cont	No			Yes	C	T	AC	Yes	15.12, 1517, 1519
Hydrocarbon wax	X	S/P	2	2G	Cont	No	-	-	Yes	C	T	ABC	No	15.12, 1517, 1519.6, 16.2.6, 16.2.9
Hydrochloric acid (*)	Z	S/P	3	1G	Cont	No			NF	C	T	No	Yes	15.11, 15.12, 1517, 1519
Hydrogen peroxide solutions (over 60% but not over 70% by mass)	Y	S/P	2	2G	Cont	No			NF	R	T	No	No	15.5.1, 15.12.3, 15.12.4, 1519.6

a	c	d	e	f	g	h	i'	i"	i"'	j	k	l	n	o
Hydrogen peroxide solutions (over 8% but not over 60% by mass)	Y	S/P	3	2G	Cont	No			NF	R	T	No	No	15.5.2, 15.18, 15.12.3, 15.12.4, 1519.6
2-Hydroxyethyl acrylate	Y	S/P	2	2G	Cont	No			Yes	C	T	AC	Yes	15.12, 15.13, 1517, 1519, 16.6.1, 16.6.2
N-(Hydroxyethyl)ethylenediaminetriacetic acid, trisodium salt solution	Y	S/P	3	2G	Cont	No			Yes	C	T	AC	No	15.12, 1517, 1519.6
2-Hydroxy-4-(methylthio) butanoic acid	Z	S/P	3	2G	Cont	No			Yes	C	T	AC	Yes	15.12, 1517, 1519
Illipe oil	Y	P	2(k)	2G	Open	No	-	-	Yes	O	No	ABC	No	1519.6, 16.2.6, 16.2.7, 16.2.9
Isoamyl alcohol	Z	S/P	3	2G	Cont	No	T2	IIA	No	R	FT	ABC	No	15.12.3, 15.12.4, 1519.6
Isobutyl alcohol	Z	S/P	3	2G	Cont	No	T2	IIA	No	R	F	ABC	No	1519.6
Isobutyl formate	Z	P	3	2G	Cont	No	T2	IIA	No	R	F	ABC	No	1519.6
Isobutyl methacrylate	Z	S/P	3	2G	Cont	No	T1	IIA	No	R	F	ABC	No	15.13, 1519.6, 16.6.1, 16.6.2
Isophorone	Y	S/P	3	2G	Cont	No			Yes	R	T	AC	No	15.12.3, 15.12.4, 1519.6
Isophoronediamine	Y	S/P	3	2G	Cont	No			Yes	C	T	AC	Yes	15.12, 1517, 1519, 16.2.9
Isophorone diisocyanate	Y	S/P	2	2G	Cont	Dry			Yes	C	T	ABD	Yes	15.12, 15.16.2, 1517, 1519
Isoprene	Y	S/P	2	2G	Cont	No	T3	IIB	No	C	FT	ABC	No	15.12, 15.13, 15.14, 1517, 1519.6, 16.6.1, 16.6.2
Isopropanolamine	Y	S/P	3	2G	Cont	No	T2	IIA	Yes	R	No	AC	No	1519.6, 16.2.6, 16.2.9
Isopropyl acetate	Z	P	3	2G	Cont	No	T1	IIA	No	R	F	ABC	No	1519.6
Isopropylamine	Y	S/P	3	2G	Cont	No	T2	IIA	No	C	FT	AC	No	15.12.3.2, 15.14, 1519
Isopropylamine (70% or less) solution	Y	S/P	3	2G	Cont	No	T2	IIA	No	C	FT	AC	No	15.12.3.2, 1519
Isopropylcyclohexane	Y	S/P	2	2G	Cont	No	T3	IIA	No	R	F	AC	No	1519.6, 16.2.9
Isopropyl ether	Y	S/P	3	2G	Cont	Inert	T2	IIA	No	R	F	AC	No	15.4.6, 15.13, 1519.6, 16.6.1, 16.6.2
Jatropha oil	Y	P	2(k)	2G	Open	No	-	-	Yes	O	No	ABC	No	1519.6, 16.2.6, 16.2.7
Lactic acid	Z	S/P	3	2G	Cont	No			Yes	C	T	AC	Yes	15.12, 1517, 1519
Lactonitrile solution (80% or less)	Y	S/P	1	1G	Cont	No			NF	C	T	No	Yes	15.12, 15.13, 1517, 15.18, 1519, 16.6.1, 16.6.2, 16.6.3
Lard	Y	S/P	2(k)	2G	Open	No	-	-	Yes	O	No	ABC	No	1519.6, 16.2.6, 16.2.7, 16.2.9
Latex, ammonia (1% or less)- inhibited	Y	S/P	2	2G	Open	No	-	-	Yes	O	No	AC	No	1519.6, 16.2.6, 16.2.9
Latex: Carboxylated styrene-Butadiene copolymer; Styrene-Butadiene rubber	Z	S/P	3	2G	Open	No	-	-	Yes	O	No	AC	No	16.2.9
Lauric acid	X	S/P	2	2G	Cont	No			Yes	R	T	AC	No	15.12.3, 15.12.4, 1519.6, 16.2.6, 16.2.9
Ligninsulphonic acid, magnesium salt solution	Z	P	3	2G	Open	No	-	-	Yes	O	No	AC	No	

a	c	d	e	f	g	h	i'	i"	i"'	j	k	l	n	o
Ligninsulphonic acid, sodium salt solution	Z	P	3	2G	Open	No	-	-	Yes	O	No	AC	No	16.2.9
Linseed oil	Y	S/P	2(k)	2G	Open	No	-	-	Yes	O	No	ABC	No	1519.6, 16.2.6, 16.2.9
Liquid chemical wastes	X	S/P	2	2G	Cont	No			No	C	FT	AC	No	15.12, 1517, 1519, 20.5.1, 20.7
Long-chain alkaryl polyether (C11-C20)	Y	S/P	2	2G	Cont	No			Yes	R	T	ABC	No	15.12.3, 15.12.4, 1519.6, 16.2.6, 16.2.9
Long-chain alkaryl sulphonic acid (C16-C60)	Y	S/P	2	2G	Cont	No	-	-	Yes	R	T	AC	No	15.12.3, 15.12.4, 1519.6, 16.2.9
Long-chain alkylphenate/Phenol sulphide mixture	Y	S/P	2	2G	Cont	No	-	-	Yes	R	T	AC	No	15.12.3, 15.12.4, 1519.6, 16.2.6, 16.2.9
Long-chain alkylphenol (C14-C18)	Y	S/P	2	2G	Cont	No			Yes	R	T	ABC	No	15.12.3, 15.12.4, 1519.6, 16.2.6
Long-chain alkylphenol (C18-C30)	Y	S/P	2	2G	Cont	No			Yes	R	T	ABC	No	15.12.3, 15.12.4, 1519.6, 16.2.6
L-Lysine solution (60% or less)	Z	P	3	2G	Open	No			Yes	O	No	AC	No	
Magnesium chloride solution	Z	P	3	2G	Open	No			Yes	O	No	AC	No	
Magnesium hydroxide slurry	Z	S	3	2G	Open	No	-	-	NF	O	No	No	No	16.2.9
Magnesium long-chain alkaryl sulphonate (C11-C50)	Y	S/P	2	2G	Cont	No	-	-	Yes	R	T	AC	No	15.12.3, 15.12.4, 1519.6, 16.2.6, 16.2.9
Magnesium long-chain alkyl salicylate (C11+)	Y	S/P	2	2G	Open	No			Yes	O	No	ABC	No	1519.6, 16.2.6, 16.2.9
Maleic anhydride	Y	S/P	3	2G	Cont	No			Yes	C	T	AC(f)	Yes	15.12, 1517, 1519, 16.2.9
Maleic anhydride-sodium allylsulphonate copolymer solution	Z	P	3	2G	Open	No			Yes	O	No	ABC	No	
Mango kernel oil	Y	P	2(k)	2G	Open	No	-	-	Yes	O	No	ABC	No	1519.6, 16.2.6, 16.2.7, 16.2.9
Mercaptobenzothiazol, sodium salt solution	X	S/P	2	2G	Open	No			NF	O	No	No	No	1519.6, 16.2.9
Mesityl oxide	Z	S/P	3	2G	Cont	No	T2	IIB	No	R	FT	AC	No	15.12.3, 15.12.4, 1519.6
Metam sodium solution	X	S/P	2	2G	Cont	No	-	-	NF	C	T	No	No	15.12.3, 15.12.4, 1519
Methacrylic acid	Y	S/P	3	2G	Cont	No			Yes	C	T	AC	No	15.13, 15.12.3, 15.12.4, 1519, 16.2.9, 16.6.1
Methacrylic acid - alkoxypoly (alkylene oxide) methacrylate copolymer, sodium salt aqueous solution (45% or less)	Z	S/P	3	2G	Open	No	-	-	NF	O	No	No	No	16.2.9
Methacrylic resin in ethylene dichloride	Y	S/P	3	2G	Cont	No	T2	IIA	No	C	FT	ABC	No	15.12, 1517, 1519, 16.2.9
Methacrylonitrile	Y	S/P	2	2G	Cont	No	T1	IIA	No	C	FT	AC	Yes	15.12, 15.13, 1517, 1519
3-Methoxy-1-butanol	Z	S/P	3	2G	Cont	No	T2	IIA	No	R	F	AC	No	1519.6
3-Methoxybutyl acetate	Y	S/P	3	2G	Open	No			Yes	O	No	ABC	No	1519.6

a	c	d	e	f	g	h	i'	i"	i"'	j	k	l	n	o
N-(2-Methoxy-1-methyl ethyl)-2-ethyl-6-methyl chloroacetanilide	X	S/P	1	2G	Cont	No			Yes	R	T	AC	No	15.12.3, 15.12.4, 1519, 16.2.6
Methyl acetate	Z	P	3	2G	Cont	No	T1	IIA	No	R	F	AC	No	1519.6
Methyl acetoacetate	Z	S/P	3	2G	Cont	No			Yes	R	T	AC	No	15.12.3, 15.12.4, 1519.6
Methyl acrylate	Y	S/P	3	2G	Cont	No	T1	IIB	No	C	FT	AC	No	15.12, 1517, 15.13, 1519
Methyl alcohol (*)	Y	S/P	3	2G	Cont	No	T1	IIA	No	C	FT	AC	No	15.12.1, 15.12.2, 15.12.3.2, 15.12.3.3, 15.12.4, 1517, 1519
Methylamine solutions (42% or less)	Y	S/P	2	2G	Cont	No	T2	IIA	No	C	FT	AC	Yes	15.12, 1517, 1519
Methylamyl acetate	Y	P	2	2G	Cont	No	T2	IIA	No	R	F	ABC	No	1519.6
Methylamyl alcohol	Z	S/P	3	2G	Cont	No	T2	IIA	No	R	FT	ABC	No	15.12.3, 15.12.4, 1519.6
Methyl amyl ketone	Z	S/P	3	2G	Cont	No	T2	IIA	No	R	F	ABC	No	1519.6
N-Methylaniline	Y	S/P	2	2G	Cont	No	-	-	Yes	R	T	ABC	No	15.12.3, 15.12.4, 1519.6
alpha-Methylbenzyl alcohol with acetophenone (15% or less)	Y	S/P	2	2G	Cont	No	-	-	Yes	C	T	ABC	Yes	15.12, 1517, 1519, 16.2.6, 16.2.9
Methylbutenol	Y	S/P	3	2G	Cont	No	T4	IIA	No	R	FT	AC	No	15.12.3, 15.12.4, 1519.6, 16.2.9
Methyl tert-butyl ether	Z	P	3	2G	Cont	No	T1	IIA	No	R	F	ABC	No	1519.6
Methyl butyl ketone	Y	S/P	3	2G	Cont	No	T2	IIA	No	C	FT	ABC	No	15.12, 1517, 1519.6
Methylbutynol	Z	S/P	3	2G	Cont	No	T4	IIB	No	R	F	AC	No	1519.6
Methyl butyrate	Y	S/P	3	2G	Cont	No	T4	IIA	No	R	FT	AC	No	15.12.3, 15.12.4, 1519.6
Methylcyclohexane	Y	S/P	2	2G	Cont	No	T3	IIA	No	R	F	AC	No	1519.6
Methylcyclopentadiene dimer	Y	S/P	2	2G	Cont	No	T4	IIB	No	R	FT	ABC	No	15.12.3, 15.12.4, 1519.6
Methylcyclopentadienyl manganese tricarbonyl	X	S/P	2	2G	Cont	No	-	-	Yes	C	T	ABC	Yes	15.12, 1517, 15.18, 1519, 16.2.9
Methyl diethanolamine	Y	S/P	3	2G	Cont	No			Yes	R	T	AC	No	15.12.3, 15.12.4, 1519.6, 16.2.6
2-Methyl-6-ethyl aniline	Y	S/P	3	2G	Cont	No			Yes	R	T	ABC	No	15.12.3, 15.12.4, 1519.6
Methyl ethyl ketone	Z	S/P	3	2G	Cont	No	T1	IIA	No	R	F	AC	No	1519.6
2-Methyl-5-ethyl pyridine	Y	S/P	2	2G	Cont	No	-	-	Yes	C	T	ABC	Yes	15.12, 1517, 1519
Methyl formate	Z	S/P	2	2G	Cont	No	T1	IIA	No	R	FT	AC	No	15.12.3, 15.12.4, 15.14, 1519.6
2-Methylglutaronitrile with 2-Ethylsuccinonitrile (12% or less)	Z	S/P	3	2G	Cont	No	-	-	Yes	C	T	ABC	Yes	15.12, 1517, 1519
2-Methyl-2-hydroxy-3-butyne	Z	S/P	3	2G	Cont	No	T3	IIA	No	R	F	AC	No	1519.6, 16.2.9
Methyl isobutyl ketone	Z	S/P	3	2G	Cont	No	T1	IIA	No	R	FT	ABC	No	15.12.3, 15.12.4, 1519.6
Methyl methacrylate	Y	S/P	3	2G	Cont	No	T2	IIA	No	R	F	AC	No	15.13, 1519.6
3-Methyl-3-methoxybutanol	Z	S/P	3	2G	Cont	No			Yes	R	T	AC	No	15.12.3, 15.12.4, 1519.6

a	c	d	e	f	g	h	i'	i"	i"'	j	k	l	n	o
Methyl naphthalene (molten)	X	S/P	2	2G	Cont	No			Yes	R	T	ABC	No	15.12.3, 15.12.4, 1519.6
N-Methylglucamine solution (70% or less)	Z	S	3	2G	Cont	No			Yes	C	T	AC	Yes	15.12, 1517, 1519, 16.2.9
2-Methyl-1,3-propanediol	Z	P	3	2G	Open	No	-	-	Yes	O	No	AC	No	
2-Methylpyridine	Z	S/P	3	2G	Cont	No	T1	IIA	No	C	F	AC	No	15.12.3.2, 1519
3-Methylpyridine	Z	S/P	3	2G	Cont	No	T1	IIA	No	C	FT	AC	No	15.12.3, 15.12.4, 1519
4-Methylpyridine	Z	S/P	3	2G	Cont	No	T1	IIA	No	C	FT	AC	No	15.12.3, 15.12.4, 1519, 16.2.9
N-Methyl-2-pyrrolidone	Y	S/P	3	2G	Cont	No			Yes	C	T	AC	No	15.12, 1517, 1519.6
Methyl propyl ketone	Z	S	3	2G	Cont	No	T1	IIA	No	R	FT	ABC	No	15.12.3, 15.12.4, 1519.6
Methyl salicylate	Y	S/P	3	2G	Cont	No			Yes	C	T	AC	No	15.12, 1517, 1519.6
alpha-Methylstyrene	Y	S/P	2	2G	Cont	No	T1	IIB	No	C	FT	AD(j)	No	15.12, 15.13, 1517, 1519.6, 16.6.1, 16.6.2
3-(methylthio)propionaldehyde	Y	S/P	2	2G	Cont	No	T3	IIA	No	R	FT	ABC	No	15.12, 1517, 1519.6
Molybdenum polysulphide long chain alkyl dithiocarbamide complex	Y	S/P	2	2G	Cont	No	-	-	Yes	R	T	ABC	No	15.12.3, 15.12.4, 1519.6, 16.2.6, 16.2.9
Morpholine	Y	S/P	3	2G	Cont	No	T2	IIA	No	C	FT	AC	No	15.12.3, 15.12.4, 1519
Motor fuel anti-knock compound (containing lead alkyls)	X	S/P	1	1G	Cont	Inert	T4	IIA	No	C	FT	AC	Yes	15.6, 15.12, 1517, 15.18, 1519
Myrcene	X	S/P	2	2G	Cont	No	T3	IIA	No	R	FT	AC	No	15.12.3, 15.12.4, 1519.6, 16.2.9
Naphthalene (molten)	X	S/P	2	2G	Cont	No	T1	IIA	Yes	C	T	ABC	No	15.12, 1517, 1519.6, 16.2.9
Naphthalene crude (molten)	Y	S/P	2	2G	Cont	No			Yes	C	T	ABC	No	15.12, 1517, 1519.6, 16.2.6, 16.2.9
Naphthalenesulphonic acid-Formaldehyde copolymer, sodium salt solution	Z	S/P	3	2G	Open	No	-	-	Yes	O	No	AC	No	16.2.9
Neodecanoic acid	Y	S/P	2	2G	Cont	No			Yes	R	T	AC	No	15.12.3, 15.12.4, 1519.6
Nitrating acid (mixture of sulphuric and nitric acids)	Y	S/P	1	1G	Cont	No			NF	C	T	No	Yes	15.11, 15.12, 15.16.2, 1517, 15.18, 1519
Nitric acid (70% and over)	Y	S/P	2	2G	Cont	No			NF	C	T	No	Yes	15.11, 15.12, 15.16.2, 1517, 1519
Nitric acid (less than 70%)	Y	S/P	2	2G	Cont	No			NF	C	T	No	Yes	15.11, 15.12, 1517, 1519
Nitrilotriacetic acid, trisodium salt solution	Y	S/P	3	2G	Cont	No			Yes	C	T	AC	No	15.12, 1517, 1519.6
Nitrobenzene	Y	S/P	2	2G	Cont	No	-	-	Yes	C	T	ABC	No	15.12, 1517, 1519, 16.2.9
Nitroethane	Y	S/P	3	2G	Cont	No	T2	IIB	No	R	FT	ABC(f)	No	15.12.3, 15.12.4, 1519.6, 16.6.1, 16.6.2, 16.6.4
Nitroethane (80%)/ Nitropropane(20%)	Y	S/P	3	2G	Cont	No	T2	IIB	No	R	FT	ABC(f)	No	15.12.3, 15.12.4, 1519.6, 16.6.1, 16.6.2, 16.6.3
Nitroethane, 1-Nitropropane (each 15% or more) mixture	Y	S/P	3	2G	Cont	No	T2	IIB	No	R	FT	ABC(f)	No	15.12.3, 15.12.4, 1519.6, 16.2.6, 16.6.1, 16.6.2, 16.6.3

a	c	d	e	f	g	h	i'	i"	i"'	j	k	l	n	o
o-Nitrophenol (molten)	Y	S/P	2	2G	Cont	No	T4	IIB	No	R	F	ABC	No	1519.6, 16.2.6, 16.2.9
1- or 2-Nitropropane	Y	S/P	3	2G	Cont	No	T2	IIB	No	C	FT	AC	No	15.12, 1517, 1519
Nitropropane (60%)/Nitroethane (40%) mixture	Y	S/P	2	2G	Cont	No	T2	IIB	No	C	FT	ABC(f)	No	15.12, 1517, 1519.6
o- or p-Nitrotoluenes	Y	S/P	2	2G	Cont	No		IIB	Yes	C	T	ABC	No	15.12, 1517, 1519.6
Nonane (all isomers)	X	S/P	2	2G	Cont	No	T3	IIA	No	R	F	ABC	No	1519.6
Nonanoic acid (all isomers)	Y	S/P	2	2G	Cont	No			Yes	C	T	ABC	Yes	15.12, 1517, 1519, 16.2.9
Non-edible industrial grade palm oil	Y	S/P	2	2G	Cont	No	-	-	Yes	R	T	ABC	No	15.12.3, 15.12.4, 1519.6, 16.2.6, 16.2.7, 16.2.9
Nonene (all isomers)	Y	P	2	2G	Cont	No	T3	IIA	No	R	F	AC	No	1519.6
Nonyl alcohol (all isomers)	Y	S/P	2	2G	Cont	No			Yes	R	T	AC	No	15.12.3, 15.12.4, 1519.6
Nonyl methacrylate monomer	Y	S/P	2	2G	Open	No			Yes	O	No	ABC	No	1519.6, 16.2.9
Nonylphenol	X	S/P	1	2G	Cont	No			Yes	C	T	AC	Yes	15.12, 1517, 1519, 16.2.6, 16.2.9
Nonylphenol poly(4+)ethoxylate	Y	S/P	2	2G	Cont	No	-	-	Yes	R	T	AC	No	15.12.3, 15.12.4, 1519.6, 16.2.6
Noxious liquid, NF, (1) n.o.s. (trade name ...., contains ....) ST1, Cat. X	X	P	1	2G	Open	No	-	-	Yes	O	No	AC	No	1519, 16.2.6
Noxious liquid, F, (2) n.o.s. (trade name ...., contains ....) ST1, Cat. X	X	P	1	2G	Cont	No	T3	IIA	No	R	F	AC	No	1519, 16.2.6
Noxious liquid, NF, (3) n.o.s. (trade name ...., contains ....) ST2, Cat. X	X	P	2	2G	Open	No	-		Yes	O	No	AC	No	1519, 16.2.6
Noxious liquid, F, (4) n.o.s. (trade name ...., contains ....) ST2, Cat. X	X	P	2	2G	Cont	No	T3	IIA	No	R	F	AC	No	1519, 16.2.6
Noxious liquid, NF, (5) n.o.s. (trade name ...., contains ....) ST2, Cat. Y	Y	P	2	2G	Open	No	-		Yes	O	No	AC	No	1519, 16.2.6, 16.2.9(l)
Noxious liquid, F, (6) n.o.s. (trade name ...., contains ....) ST2, Cat. Y	Y	P	2	2G	Cont	No	T3	IIA	No	R	F	AC	No	1519, 16.2.6, 16.2.9(l)
Noxious liquid, NF, (7) n.o.s. (trade name ...., contains ....) ST3, Cat. Y	Y	P	3	2G	Open	No	-	-	Yes	O	No	AC	No	1519, 16.2.6, 16.2.9(l)
Noxious liquid, F, (8) n.o.s. (trade name ...., contains ....) ST3, Cat. Y	Y	P	3	2G	Cont	No	T3	IIA	No	R	F	AC	No	1519, 16.2.6, 16.2.9(l)
Noxious liquid, NF, (9) n.o.s. (trade name ...., contains ....) ST3, Cat. Z	Z	P	3	2G	Open	No	-		Yes	O	No	AC	No	
Noxious liquid, F, (10) n.o.s. (trade name ...., contains ....) ST3, Cat. Z	Z	P	3	2G	Cont	No	T3	IIA	No	R	F	AC	No	1519.6
Octamethylcyclotetrasiloxane	Y	P	2	2G	Cont	No	T2	IIA	No	R	F	AC	No	1519.6, 16.2.9
Octane (all isomers)	X	P	2	2G	Cont	No	T3	IIA	No	R	F	AC	No	1519.6

a	c	d	e	f	g	h	i'	i"	i"'	j	k	l	n	o
Octanoic acid (all isomers)	Y	S/P	2	2G	Cont	No	-	-	Yes	C	T	ABC	Yes	15.12, 1517, 1519
Octanol (all isomers)	Y	S/P	2	2G	Cont	No			Yes	R	T	AC	No	15.12.3, 15.12.4, 1519.6
Octene (all isomers)	Y	P	2	2G	Cont	No	T3	IIA	No	R	F	AC	No	1519.6
n-Octyl acetate	Y	S/P	3	2G	Open	No			Yes	O	No	AC	No	1519.6, 16.2.9
Octyl aldehydes	Y	S/P	2	2G	Cont	No	T4	IIB	No	R	F	AC	No	1519.6, 16.2.9
Octyl decyl adipate	Y	S/P	2	2G	Open	No	-	-	Yes	O	No	AC	No	1519.6, 16.2.9
n-Octyl mercaptan	X	S/P	1	2G	Open	No			Yes	O	No	ABC	No	1519
Offshore contaminated bulk liquid P (o)	X	P	2	2G	Open	No	-	-	Yes	O	No	AC	No	1519.6
Offshore contaminated bulk liquid S (o)	X	S/P	2	2G	Cont	No	T3	IIA	No	C	FT	AC	Yes	15.12, 15.15, 1517, 1519
Olefin-Alkyl ester copolymer (molecular weight 2000+)	Y	P	2	2G	Open	No			Yes	O	No	ABC	No	1519.6, 16.2.6, 16.2.9
Olefin Mixture (C7-C9) C8 rich, stabilised	X	P	2	2G	Cont	No	T3	IIB	No	R	F	ABC	No	15.13, 1519.6
Olefin mixtures (C5-C7)	Y	S/P	3	2G	Cont	No	T3	IIA	No	R	F	AC	No	1519.6
Olefin mixtures (C5-C15)	X	S/P	2	2G	Cont	No	T3	IIA	No	R	FT	AC	No	15.12.3, 15.12.4, 1519.6
Olefins (C13+, all isomers)	Y	P	2	2G	Open	No			Yes	O	No	ABC	No	1519.6, 16.2.9
alpha-Olefins (C6-C18) mixtures	X	S/P	2	2G	Cont	No	T4	IIA	No	R	FT	AC	No	15.12.3, 15.12.4, 1519.6, 16.2.9
Oleic acid	Y	S/P	2	2G	Cont	No			Yes	R	T	ABC	No	15.12.3, 15.12.4, 1519.6, 16.2.9
Oleum	Y	S/P	2	2G	Cont	Dry	-	-	NF	C	T	No	Yes	1511.2 to 1511.8, 15.12, 15.16.2, 1517, 1519, 16.2.6
Oleylamine	X	S/P	2	2G	Cont	No			Yes	C	T	AC	Yes	15.12, 1517, 1519, 16.2.9
Olive oil	Y	S/P	2(k)	2G	Open	No	-	-	Yes	O	No	ABC	No	1519.6, 16.2.6, 16.2.7, 16.2.9
Oxygenated aliphatic hydrocarbon mixture	Z	S/P	3	2G	Open	No	-	-	Yes	O	No	ABC	No	
Palm acid oil	Y	S/P	2	2G	Open	No	-	-	Yes	O	No	ABC	No	1519.6, 16.2.6, 16.2.7, 16.2.9
Palm fatty acid distillate	Y	S/P	2	2G	Open	No	-	-	Yes	O	No	ABC	No	1519.6, 16.2.6, 16.2.7, 16.2.9
Palm kernel acid oil	Y	S/P	2	2G	Cont	No			Yes	R	T	ABC	No	15.12.3, 15.12.4, 1519.6, 16.2.6, 16.2.7, 16.2.9
Palm kernel fatty acid distillate	Y	S/P	2	2G	Cont	No	-	-	Yes	R	T	ABC	No	15.12.3, 15.12.4, 1519.6, 16.2.6, 16.2.7, 16.2.9
Palm kernel oil	Y	S/P	2(k)	2G	Open	No	-	-	Yes	O	No	ABC	No	1519.6, 16.2.6, 16.2.7, 16.2.9
Palm kernel olein	Y	P	2(k)	2G	Open	No	-	-	Yes	O	No	ABC	No	1519.6, 16.2.6, 16.2.7, 16.2.9
Palm kernel stearin	Y	P	2(k)	2G	Open	No	-	-	Yes	O	No	ABC	No	1519.6, 16.2.6, 16.2.7, 16.2.9
Palm mid-fraction	Y	P	2(k)	2G	Open	No	-	-	Yes	O	No	ABC	No	1519.6, 16.2.6, 16.2.7, 16.2.9

a	c	d	e	f	g	h	i'	i"	i"'	j	k	l	n	o
Palm oil	Y	P	2(k)	2G	Open	No	-	-	Yes	O	No	ABC	No	1519.6, 16.2.6, 16.2.7, 16.2.9
Palm oil fatty acid methyl ester	Y	P	2	2G	Open	No	-	-	Yes	O	No	AC	No	1519.6, 16.2.9
Palm olein	Y	P	2(k)	2G	Open	No	-	-	Yes	O	No	ABC	No	1519.6, 16.2.6, 16.2.7, 16.2.9
Palm stearin	Y	P	2(k)	2G	Open	No	-	-	Yes	O	No	ABC	No	1519.6, 16.2.6, 16.2.7, 16.2.9
Paraffin wax, highly-refined	Y	P	2	2G	Open	No	-	-	Yes	O	No	ABC	No	1519.6, 16.2.6, 16.2.7, 16.2.9
Paraffin wax, semi-refined	X	S/P	2	2G	Cont	No	-	-	Yes	C	T	ABC	No	15.12, 1517, 1519.6, 16.2.6, 16.2.9
Paraldehyde	Z	S/P	3	2G	Cont	No	T3	IIB	No	R	F	AC	No	1519.6, 16.2.9
Paraldehyde-ammonia reaction product	Y	S/P	2	2G	Cont	No	T1	IIB	No	C	FT	ABC	Yes	15.12, 1517, 1519
Pentachloroethane	Y	S/P	2	2G	Cont	No			NF	C	T	No	No	15.12, 1517, 1519.6
1,3-Pentadiene	Y	P	3	2G	Cont	No	T1	IIA	No	R	F	ABC	No	15.13, 1519.6, 16.6.1, 16.6.2, 16.6.3
1,3-Pentadiene (greater than 50%), cyclopentene and isomers, mixtures	Y	S/P	2	2G	Cont	Inert	T3	IIB	No	C	FT	ABC	Yes	15.12, 15.13, 1517, 1519
Pentaethylenehexamine	X	S/P	2	2G	Cont	No			Yes	C	T	ABC	Yes	15.12, 1517, 1519
Pentane (all isomers)	Y	P	3	2G	Cont	No	T2	IIA	No	R	F	AC	No	15.14, 1519.6
Pentanoic acid	Y	S/P	2	2G	Cont	No			Yes	C	T	ABC	Yes	15.12, 1517, 1519
n-Pentanoic acid (64%)/2-Methyl butyric acid (36%) mixture	Y	S/P	2	2G	Cont	No			Yes	C	T	ABC	Yes	1511.2, 1511.3, 1511.4, 1511.6, 1511.7, 1511.8, 15.12, 1517, 1519
Pentene (all isomers)	Y	P	2	2G	Cont	No	T3	IIA	No	R	F	AC	No	15.14, 1519.6
n-Pentyl propionate	Y	S/P	3	2G	Cont	No	T2	IIA	No	R	FT	ABC	No	15.12.3, 15.12.4, 1519.6
Perchloroethylene	Y	S/P	2	2G	Cont	No			NF	C	T	No	No	15.12, 1517, 1519.6
Phenol	Y	S/P	2	2G	Cont	No	T1	IIA	Yes	C	T	AC	Yes	15.12, 1517, 1519, 16.2.9
1-Phenyl-1-xylyl ethane	Y	S/P	2	2G	Open	No			Yes	O	No	ABC	No	1519.6
Phosphate esters, alkyl (C12-C14) amine	Y	S/P	2	2G	Cont	No	T4	IIB	No	R	FT	ABC	No	15.12.3, 15.12.4, 1519.6, 16.2.6, 16.2.9
Phosphoric acid	Z	S/P	3	2G	Cont	No			NF	C	T	No	Yes	15.11.1, 1511.2, 1511.3, 1511.4, 1511.6, 1511.7, 1511.8, 15.12, 1517, 1519, 16.2.9
Phosphorus, yellow or white (*)	X	S/P	1	1G	Cont	Pad +(vent or inert)			No(c)	C	No	ABC	No	15.7, 1519, 16.2.9
Phthalic anhydride (molten)	Y	S/P	2	2G	Cont	No	T1	IIA	Yes	C	T	ABC	Yes	15.12, 1517, 1519, 16.2.6, 16.2.9
alpha-Pinene	X	S/P	2	2G	Cont	No	T3	IIA	No	R	F	ABC	No	1519.6
beta-Pinene	X	S/P	2	2G	Cont	No	T1	IIB	No	R	F	ABC	No	1519.6
Pine oil	X	S/P	2	2G	Open	No			Yes	O		ABC	No	1519.6, 16.2.6, 16.2.9

a	c	d	e	f	g	h	i'	i"	i"'	j	k	l	n	o
Piperazine, 68% solution	Y	S/P	2	2G	Cont	No			Yes	C	T	AC	Yes	15.12, 1517, 1519, 16.2.6, 16.2.9
Polyacrylic acid solution (40% or less)	Z	S/P	3	2G	Open	No	-	-	Yes	O	No	AC	No	
Polyalkyl (C18-C22) acrylate in xylene	Y	S/P	2	2G	Cont	No	T1	IIB	No	R	FT	ABC	No	15.12.3, 15.12.4, 1519.6, 16.2.6,16.2.9
Polyalkylalkenaminesuccinimide, molybdenum oxysulphide	Y	P	2	2G	Open	No	-	-	Yes	O	No	ABC	No	1519.6, 16.2.6
Poly(2-8)alkylene glycol monoalkyl(C1-C6) ether	Z	P	3	2G	Open	No	-	-	Yes	O	No	AC	No	
Poly(2-8)alkylene glycol monoalkyl (C1-C6) ether acetate	Y	P	2	2G	Open	No	-	-	Yes	O	No	ABC	No	1519.6
Polyalkyl (C10-C20) methacrylate	Y	P	2	2G	Open	No			Yes	O	No	ABC	No	1519.6, 16.2.6, 16.2.9
Polyalkyl (C10-C18) methacrylate/ethylene-propylene copolymer mixture	Y	P	2	2G	Open	No			Yes	O	No	ABC	No	1519.6, 16.2.6, 16.2.9
Polyaluminium chloride solution	Z	S	3	2G	Open	No			NF	O	No	No	No	
Polybutene	Y	P	2	2G	Open	No	-	-	Yes	O	No	ABC	No	1519.6, 16.2.6
Polybutenyl succinimide	Y	P	2	2G	Open	No	-	-	Yes	O	No	ABC	No	1519.6, 16.2.6, 16.2.9
Poly(2+)cyclic aromatics	X	S/P	1	2G	Cont	No			Yes	C	T	ABC	No	15.12, 1517, 1519, 16.2.6, 16.2.9
Polyether (molecular weight 1350+)	Y	P	2	2G	Open	No	-	-	Yes	O	No	ABC	No	1519.6, 16.2.6
Polyethylene glycol	Z	P	3	2G	Open	No			Yes	O	No	AC	No	
Polyethylene glycol dimethyl ether	Z	S/P	3	2G	Open	No			Yes	O	No	AC	No	
Poly(ethylene glycol) methylbutenyl ether (MW>1000)	Z	P	3	2G	Open	No	-	-	Yes	O	No	AC	No	16.2.9
Polyethylene polyamines	Y	S/P	2	2G	Cont	No	-	-	Yes	C	T	AC	Yes	15.12, 1517, 1519, 16.2.6, 16.2.9
Polyethylene polyamines (more than 50% C5 -C20 paraffin oil)	Y	S/P	2	2G	Cont	No			Yes	C	T	AC	Yes	15.12, 1517, 1519, 16.2.9
Polyferric sulphate solution	Y	S/P	3	2G	Cont	No			NF	C	T	No	Yes	15.12, 1517, 1519
Poly(iminoethylene)-graft-N-poly(ethyleneoxy) solution (90% or less)	Z	S/P	3	2G	Open	No	-	-	NF	O	No	No	No	16.2.9
Polyisobutenamine in aliphatic (C10-C14) solvent	Y	S/P	2	2G	Cont	No	-	-	Yes	R	T	ABC	No	15.12.3, 15.12.4, 1519.6
(Polyisobutene) amino products in aliphatic hydrocarbons	Y	S/P	2	2G	Open	No			Yes	O	No	ABC	No	1519.6, 16.2.6
Polyisobutenyl anhydride adduct	Z	S/P	3	2G	Open	No			Yes	O	No	ABC	No	
Poly(4+)isobutylene (MW>224)	X	P	2	2G	Open	No			Yes	O	No	ABC	No	1519.6, 16.2.6, 16.2.9

a	c	d	e	f	g	h	i'	i"	i"'	j	k	l	n	o
Polyisobutylene (MW≤Â224)	Y	P	2	2G	Open	No			Yes	O	No	ABC	No	1519.6, 16.2.9
Polyglycerin, sodium salt solution (containing less than 3% sodium hydroxide)	Z	S	2	2G	Cont	No			Yes	C	T	AC	Yes	15.12, 1517, 1519. 16.2.9
Polymethylene polyphenyl isocyanate	Y	S/P	3	2G	Cont	Dry			Yes (a)	C	T(a)	AD	Yes	15.12, 15.16.2, 1517, 1519.6, 16.2.9
Polyolefin (molecular weight 300+)	Y	P	2	2G	Open	No	-	-	Yes	O	No	ABC	No	1519.6, 16.2.6, 16.2.9
Polyolefin amide alkeneamine (C17+)	Y	S/P	2	2G	Open	No			Yes	O	No	ABC	No	1519.6, 16.2.6
Polyolefin amide alkeneamine borate (C28-C250)	Y	P	2	2G	Open	No			Yes	O	No	ABC	No	1519.6, 16.2.6, 16.2.9
Polyolefin amide alkeneamine polyol	Y	P	2	2G	Open	No	-	-	Yes	O	No	ABC	No	1519.6, 16.2.6, 16.2.9
Polyolefinamine (C28-C250)	Y	S/P	2	2G	Cont	No			Yes	R	T	ABC	No	15.12.3, 15.12.4, 1519.6, 16.2.9
Polyolefinamine in alkyl (C2-C4) benzenes	Y	S/P	2	2G	Cont	No	T2	IIB	No	R	FT	ABC	No	15.12.3, 15.12.4, 1519.6, 16.2.6, 16.2.9
Polyolefinamine in aromatic solvent	Y	S/P	2	2G	Cont	No	T2	IIB	No	R	FT	ABC	No	15.12.3, 15.12.4, 1519.6, 16.2.6, 16.2.9
Polyolefin aminoester salts (molecular weight 2000+)	Y	S/P	2	2G	Open	No	-	-	Yes	O	No	ABC	No	1519.6, 16.2.6, 16.2.9
Polyolefin anhydride	Y	S/P	2	2G	Cont	No			Yes	R	T	ABC	No	15.12.3, 15.12.4, 1519.6, 16.2.6, 16.2.9
Polyolefin ester (C28-C250)	Y	P	2	2G	Open	No			Yes	O	No	ABC	No	1519.6, 16.2.6, 16.2.9
Polyolefin phenolic amine (C28-C250)	Y	S/P	2	2G	Open	No			Yes	O	No	ABC	No	1519.6, 16.2.6, 16.2.9
Polyolefin phosphorosulphide, barium derivative (C28-C250)	Y	P	2	2G	Open	No			Yes	O	No	ABC	No	1519.6, 16.2.6, 16.2.9
Poly(20)oxyethylene sorbitan monooleate	Y	P	3	2G	Open	No			Yes	O	No	AC	No	1519.6, 16.2.6, 16.2.9
Poly(5+)propylene	Y	P	3	2G	Open	No	-	-	Yes	O	No	ABC	No	1519.6, 16.2.9
Polypropylene glycol	Z	S/P	3	2G	Open	No			Yes	O	No	AC	No	1519.6
Polysiloxane	Y	P	2	2G	Cont	No	T2	IIB	No	R	F	ABC	No	1519.6, 16.2.9
Potassium chloride solution	Z	P	3	2G	Open	No	-	-	NF	O	No	No	No	16.2.9
Potassium hydroxide solution (*)	Y	S/P	3	2G	Open	No			NF	C	No	No	No	15.12.3.2, 1519
Potassium formate solutions (*)	Z	S	3	2G	Open	No			NF	R	No	No	No	1519.6
Potassium oleate	Y	S/P	2	2G	Open	No			Yes	O	No	AC	No	1519.6, 16.2.6, 16.2.9
Potassium thiosulphate (50% or less)	Y	S/P	3	2G	Cont	No			NF	R	T	No	No	15.12.3, 15.12.4, 1519.6, 16.2.9
n-Propanolamine	Y	S/P	3	2G	Cont	No			Yes	C	T	ABC	Yes	15.12, 1517, 1519, 16.2.9

a	c	d	e	f	g	h	i'	i"	i"'	j	k	l	n	o
2-Propene-1-aminium, N,N-dimethyl-N-2-propenyl-, chloride, homopolymer solution	Y	P	3	2G	Open	No	-	-	NF	O	No	No	No	1519.6
beta-Propiolactone	Y	S/P	1	2G	Cont	No		IIA	Yes	C	T	AC	Yes	15.12, 1517, 15.18, 1519
Propionaldehyde	Y	S/P	3	2G	Cont	Inert	T4	IIB	No	R	F	AC	No	1519.6
Propionic acid	Y	S/P	3	2G	Cont	No	T1	IIA	No	C	FT	AC	Yes	1511.2, 1511.3, 1511.4, 1511.6, 1511.7, 1511.8, 15.12, 1517, 1519
Propionic anhydride	Y	S/P	2	2G	Cont	No	T2	IIA	Yes	C	T	AC	Yes	15.12, 1517, 1519
Propionitrile	Y	S/P	1	1G	Cont	No	T1	IIB	No	C	FT	AC	Yes	15.12, 1517, 15.18, 1519
n-Propyl acetate	Y	P	3	2G	Cont	No	T1	IIA	No	R	F	ABC	No	1519.6
n-Propyl alcohol	Y	S/P	3	2G	Cont	No	T2	IIA	No	C	FT	AC	No	15.12, 1517, 1519.6
n-Propylamine	Z	S/P	2	2G	Cont	Inert	T2	IIA	No	C	FT	AC	Yes	15.12, 1517, 1519
Propylbenzene (all isomers)	Y	P	3	2G	Cont	No	T2	IIA	No	R	F	ABC	No	1519.6
Propylene carbonate	Z	S	3	2G	Cont	No			Yes	C	T	ABC	Yes	15.12, 1517, 1519
Propylene glycol methyl ether acetate	Z	P	3	2G	Cont	No	T2	IIA	No	R	F	AC	No	
Propylene glycol monoalkyl ether	Z	S/P	3	2G	Cont	No	T3	IIA	No	R	F	AC	No	1519.6
Propylene glycol phenyl ether	Z	S/P	3	2G	Open	No			Yes	O	No	ABC	No	
Propylene oxide	Y	S/P	2	2G	Cont	Inert	T2	IIB	No	C	FT	AC	No	15.8, 15.12, 15.14, 1517, 1519
Propylene tetramer	X	S/P	2	2G	Cont	No	T3	IIA	No	R	F	ABC	No	1519.6
Propylene trimer	Y	S/P	2	2G	Cont	No	T3	IIA	No	R	F	ABC	No	1519.6
Pyridine	Y	S/P	3	2G	Cont	No	T1	IIA	No	R	FT	AC	No	15.12.3, 15.12.4, 1519.6
Pyrolysis gasoline (containing benzene)	Y	S/P	2	2G	Cont	No	T3	IIA	No	C	FT	ABC	No	15.12, 1517, 1519.6
Rapeseed oil	Y	P	2(k)	2G	Open	No	-	-	Yes	O	No	ABC	No	1519.6, 16.2.6, 16.2.7, 16.2.9
Rapeseed oil (low erucic acid containing less than 4% free fatty acids)	Y	P	2(k)	2G	Open	No	-	-	Yes	O	No	ABC	No	1519.6, 16.2.6, 16.2.7, 16.2.9
Rape seed oil fatty acid methyl esters	Y	S/P	2	2G	Open	No	-	-	Yes	O	No	ABC	No	1519.6
Resin oil, distilled	Y	S/P	2	2G	Cont	No	T1	IIA	No	C	FT	ABC	No	15.12, 1517, 1519.6
Rice bran oil	Y	S/P	2(k)	2G	Open	No	-	-	Yes	O	No	ABC	No	1519.6, 16.2.6, 16.2.7, 16.2.9
Rosin	Y	S/P	2	2G	Cont	No			Yes	R	T	AC	No	15.12.3, 15.12.4, 1519.6, 16.2.6, 16.2.9
Safflower oil	Y	S/P	2(k)	2G	Open	No	-	-	Yes	O	No	ABC	No	1519.6, 16.2.6, 16.2.7, 16.2.9
Shea butter	Y	S/P	2(k)	2G	Open	No	-	-	Yes	O	No	ABC	No	1519.6, 16.2.6, 16.2.7, 16.2.9
Sodium alkyl (C14-C17) sulphonates (60-65% solution)	Y	S/P	2	2G	Cont	No			NF	R	T	No	No	15.12.3, 15.12.4, 1519.6, 16.2.6, 16.2.9

a	c	d	e	f	g	h	i'	i"	i"'	j	k	l	n	o
Sodium aluminosilicate slurry	Z	P	3	2G	Open	No			NF	O	No	No	No	16.2.9
Sodium benzoate	Z	S/P	3	2G	Open	No			Yes	O	No	AC	No	16.2.9
Sodium borohydride (15% or less)/Sodium hydroxide solution (*)	Y	S/P	3	2G	Open	No			NF	C	No	No	No	1519, 16.2.6, 16.2.9
Sodium bromide solution (less than 50%) (*)	Y	S/P	3	2G	Open	No	-	-	NF	R	No	No	No	1519.6
Sodium carbonate solution (*)	Z	S/P	3	2G	Open	No			NF	R	No	No	No	1519.6
Sodium chlorate solution (50% or less) (*)	Z	S/P	3	2G	Open	No			NF	R	No	No	No	15.9, 15.12, 1519, 16.2.9
Sodium dichromate solution (70% or less)	Y	S/P	1	1G	Cont	No			NF	C	T	No	Yes	15.12, 1517, 15.18, 1519
Sodium hydrogen sulphide (6% or less)/Sodium carbonate (3% or less) solution	Z	S/P	3	2G	Open	No			NF	O	No	No	No	1519.6, 16.2.9
Sodium hydrogen sulphite solution (45% or less)	Z	P	3	2G	Open	No			NF	O	No	No	No	16.2.9
Sodium hydrosulphide/Ammonium sulphide solution (*)	Y	S/P	2	2G	Cont	No	T4	IIB	No	C	FT	AC	Yes	15.12, 15.15, 1517, 1519, 16.6.1, 16.6.2, 16.6.3
Sodium hydrosulphide solution (45% or less) (*)	Z	S/P	3	2G	Cont	Vent or pad (gas)			NF	R	T	No	Yes	15.12, 15.15, 1519.6, 16.2.9
Sodium hydroxide solution (*)	Y	S/P	3	2G	Open	No			NF	C	No	No	No	1519, 16.2.6, 16.2.9
Sodium hypochlorite solution (15% or less)	Y	S/P	2	2G	Cont	No	-	-	NF	R	No	No	No	1517, 1519.6
Sodium methylate 21-30% in methyl alcohol	Y	S/P	2	2G	Cont	No	T1	IIA	No	C	FT	AC	Yes	15.12, 1517, 1519, 16.2.6(only if >28%), 16.2.9
Sodium nitrite solution	Y	S/P	3	2G	Cont	No			NF	C	T	No	No	15.12.3, 15.12.4, 1519, 16.2.6, 16.2.9
Sodium petroleum sulphonate	Y	S/P	2	2G	Cont	No			Yes	R	T	ABC	Yes	15.12.3, 15.12.4, 1519.6, 16.2.6
Sodium poly(4+)acrylate solutions	Z	S/P	3	2G	Open	No	-	-	Yes	O	No	AC	No	16.2.9
Sodium silicate solution	Y	S/P	3	2G	Cont	No			NF	C	T	No	Yes	15.12, 1517, 1519, 16.2.9
Sodium sulphate solutions	Z	S	3	2G	Open	No			NF	O	No	No	No	16.2.9,
Sodium sulphide solution (15% or less)	Y	S/P	3	2G	Cont	No			NF	C	T	No	Yes	15.12, 1517, 1519, 16.2.9
Sodium sulphite solution (25% or less)	Y	S/P	3	2G	Open	No			NF	O	No	No	No	1519.6, 16.2.9
Sodium thiocyanate solution (56% or less)	Y	S/P	3	2G	Open	No			NF	O	No	No	No	1519.6, 16.2.9
Soyabean oil	Y	S/P	2(k)	2G	Open	No	-	-	Yes	O	No	ABC	No	1519.6, 16.2.6, 16.2.7, 16.2.9
Soybean Oil Fatty Acid Methyl Ester	Y	P	2	2G	Open	No			Yes	O	No	ABC	No	1519.6, 16.2.9

a	c	d	e	f	g	h	i'	i"	i"'	j	k	l	n	o
Styrene monomer	Y	S/P	3	2G	Cont	No	T1	IIA	No	C	FT	ABC	No	15.12, 15.13, 1517, 1519.6, 16.6.1, 16.6.2
Sulphohydrocarbon (C3-C88)	Y	P	2	2G	Open	No	-	-	Yes	O	No	ABC	No	1519.6, 16.2.6, 16.2.9
Sulpholane	Y	S/P	3	2G	Open	No			Yes	O	No	AC	No	1519.6, 16.2.9
Sulphur (molten) (*)	Z	S	3	1G	Open	Vent or pad (gas)	T3		Yes	O	FT	No	No	15.10, 16.2.9
Sulphuric acid	Y	S/P	2	2G	Cont	No			NF	C	T	No	Yes	15.11, 15.12, 15.16.2, 1517, 1519, 16.2.9
Sulphuric acid, spent	Y	S/P	2	2G	Cont	No			NF	C	T	No	Yes	15.11, 15.12, 15.16.2, 1517, 1519
Sulphurized fat (C14-C20)	Z	S/P	3	2G	Open	No			Yes	O	No	ABC	No	
Sulphurized polyolefinamide alkene (C28-C250) amine	Z	P	3	2G	Open	No	-	-	Yes	O	No	AC	No	
Sunflower seed oil	Y	S/P	2(k)	2G	Open	No	-	-	Yes	O	No	ABC	No	1519.6, 16.2.6, 16.2.7, 16.2.9
Tall oil, crude	Y	S/P	2	2G	Open	No	-	-	Yes	O	No	ABC	No	1519.6, 16.2.6
Tall oil, distilled	Y	P	2	2G	Open	No	-	-	Yes	O	No	ABC	No	1519.6, 16.2.6
Tall oil fatty acid (resin acids less than 20%)	Y	S/P	2	2G	Open	No	-	-	Yes	O	No	ABC	No	1519.6
Tall oil pitch	Y	P	2	2G	Open	No	-	-	Yes	O	No	ABC	No	1519.6,16.2.6, 16.2.9
Tall oil soap, crude	Y	S/P	2	2G	Cont	No			Yes	C	T	ABC	Yes	15.12, 1517, 1519, 16.2.6
Tallow	Y	P	2(k)	2G	Open	No	-	-	Yes	O	No	ABC	No	1519.6, 16.2.6, 16.2.7, 16.2.9
Tallow fatty acid	Y	P	2	2G	Open	No	-	-	Yes	O	No	AC	No	1519.6, 16.2.6, 16.2.7, 16.2.9
Tetrachloroethane	Y	S/P	2	2G	Cont	No			NF	R	T	No	No	15.12.3, 15.12.4, 1519
Tetraethylene glycol	Z	P	3	2G	Open	No			Yes	O	No	AC	No	
Tetraethylene pentamine	Y	S/P	2	2G	Cont	No			Yes	C	T	AC	Yes	15.12, 1517, 1519
Tetrahydrofuran	Z	S	3	2G	Cont	No	T3	IIB	No	R	F	AC	No	1519.6
Tetrahydronaphthalene	Y	S/P	2	2G	Cont	No			Yes	R	T	ABC	No	15.12.3, 15.12.4, 1519.6
Tetramethylbenzene (all isomers)	X	S/P	2	2G	Open	No			Yes	O	No	ABC	No	1519.6, 16.2.9
Titanium dioxide slurry	Z	P	3	2G	Open	No			NF	O	No	No	No	
Toluene	Y	S/P	3	2G	Cont	No	T1	IIA	No	C	FT	AC	No	15.12, 1517, 1519.6
Toluenediamine	Y	S/P	2	2G	Cont	No			Yes	C	T	ABC	Yes	15.12, 1517, 15.18, 1519, 16.2.6, 16.2.9
Toluene diisocyanate	Y	S/P	2	2G	Cont	Dry	-	-	Yes	C	T	ABC(b)D	Yes	15.12, 15.16.2, 1517, 15.18, 1519, 16.2.9
o-Toluidine	Y	S/P	2	2G	Cont	No			Yes	C	T	ABC	No	15.12, 1517, 1519
Tributyl phosphate	Y	S/P	3	2G	Cont	No			Yes	C	T	ABC	No	15.12.3, 15.12.4, 1519.6
1,2,3-Trichlorobenzene (molten)	X	S/P	2	2G	Cont	No			Yes	R	T	ABC	No	15.12.3, 15.12.4, 1519.6, 16.2.6, 16.2.9

a	c	d	e	f	g	h	i'	i"	i"'	j	k	l	n	o
1,2,4-Trichlorobenzene	X	S/P	1	2G	Cont	No			Yes	C	T	ABC	No	15.12, 1517, 1519, 16.2.9
1,1,1-Trichloroethane	Y	P	2	2G	Open	No			Yes	O	No	ABC	No	1519.6
1,1,2-Trichloroethane	Y	S/P	3	2G	Open	No			NF	O	No	No	No	1519.6
Trichloroethylene	Y	S/P	2	2G	Cont	No	-	-	NF	C	T	No	No	15.12, 1517, 1519.6
1,2,3-Trichloropropane	Y	S/P	3	2G	Cont	No			Yes	C	T	ABC	No	15.12, 1517, 1519
1,1,2-Trichloro-1,2,2-Trifluoroethane	Y	P	2	2G	Open	No			NF	O	No	No	No	1519.6
Tricresyl phosphate (containing 1% or more ortho-isomer)	Y	S/P	2	2G	Cont	No	-	-	Yes	C	T	ABC	No	15.12, 1517, 1519, 16.2.6
Tricresyl phosphate (containing less than 1% ortho-isomer)	Y	S/P	2	2G	Cont	No			Yes	C	T	ABC	No	15.12, 1517, 1519.6, 16.2.6
Tridecane	Y	S/P	2	2G	Open	No			Yes	O	No	ABC	No	1519.6
Tridecanoic acid	Y	S/P	2	2G	Open	No			Yes	O	No	ABC	No	1519.6, 16.2.6, 16.2.9
Tridecyl acetate	Y	S/P	3	2G	Cont	No	-	-	Yes	R	T	ABC	No	15.12.3, 15.12.4, 1519.6
Triethanolamine	Z	S/P	3	2G	Cont	No			Yes	R	T	AC	No	15.12.3, 15.12.4, 1519.6, 16.2.9
Triethylamine	Y	S/P	3	2G	Cont	No	T2	IIA	No	C	FT	ABC	No	15.12.3, 15.12.4, 1519
Triethylbenzene	X	S/P	2	2G	Cont	No			Yes	R	T	ABC	No	15.12.3, 15.12.4, 1519.6
Triethylenetetramine	Y	S/P	2	2G	Cont	No	-	-	Yes	C	T	AC	Yes	15.12, 1517, 1519, 16.2.9
Triethyl phosphate	Z	S/P	3	2G	Open	No			Yes	O	No	AC	No	1519.6
Triethyl phosphite	Z	S/P	3	2G	Cont	No	T3	IIA	No	R	FT	ABC	No	15.12.3, 15.12.4, 1519.6, 16.2.9
Triisopropanolamine	Z	S/P	3	2G	Open	No			Yes	O	No	AC	No	1519.6, 16.2.9
Triisopropylated phenyl phosphates	X	P	2	2G	Open	No			Yes	O	No	AC	No	1519.6, 16.2.6
Trimethylacetic acid	Y	S/P	2	2G	Cont	No			Yes	R	T	AC	No	15.11, 15.12.3, 15.12.4, 1519.6, 16.2.6, 16.2.9
Trimethylamine solution (30% or less)	Z	S/P	2	2G	Cont	No	T3	IIB	No	R	FT	AC	No	15.12.3, 15.12.4, 15.14, 1519.6
Trimethylbenzene (all isomers)	X	S/P	2	2G	Cont	No	T1	IIA	No	R	F	ABC	No	1519.6
Trimethylol propane propoxylated	Z	S/P	3	2G	Open	No	-	-	Yes	O	No	ABC	No	
2,2,4-Trimethyl-1,3-pentanediol diisobutyrate	Y	S/P	3	2G	Open	No			Yes	O	No	ABC	No	1519.6
2,2,4-Trimethyl-1,3-pentanediol-1-isobutyrate	Y	S/P	2	2G	Open	No			Yes	O	No	ABC	No	1519.6
1,3,5-Trioxane	Y	S/P	3	2G	Cont	No	T2	IIB	No	C	FT	AC	No	15.12, 1517, 1519.6, 16.2.9
Tripropylene glycol	Z	P	3	2G	Open	No			Yes	O	No	AC	No	
Trixylyl phosphate	X	S/P	1	2G	Cont	No			Yes	C	T	ABC	No	15.12, 1517, 1519.6, 16.2.6
Tung oil	Y	S/P	2(k)	2G	Open	No	-	-	Yes	O	No	ABC	No	1519.6, 16.2.6, 16.2.7, 16.2.9

a	c	d	e	f	g	h	i'	i"	i"'	j	k	l	n	o
Turpentine	X	S/P	2	2G	Cont	No	T3	IIA	No	R	FT	AC	No	1519.6
Undecanoic acid	Y	S/P	2	2G	Cont	No			Yes	R	T	ABC	No	15.12.3, 15.12.4, 1519.6, 16.2.6, 16.2.9
1-Undecene	X	S/P	2	2G	Open	No			Yes	O	No	ABC	No	1519.6
Undecyl alcohol	X	S/P	2	2G	Cont	No			Yes	R	T	ABC	No	15.12.3, 15.12.4, 1519.6, 16.2.9
Urea/Ammonium nitrate solution	Y	S/P	3	2G	Open	No	-	-	NF	O	No	No	No	1519.6
Urea/Ammonium phosphate solution	Y	S/P	2	2G	Cont	No			Yes	R	T	AC	No	15.12.3, 15.12.4, 1519.6
Urea solution	Z	S/P	3	2G	Open	No			Yes	O	No	AC	No	16.2.9,
Used cooking oil (m)	X	S/P	2	2G	Open	No			Yes	O	No	ABC	No	1519.6, 16.2.6, 16.2.9
Used cooking oil (Triglycerides, C16-C18 and C18 unsaturated) (m) (n)	Y	S/P	2	2G	Open	No			Yes	O	No	ABC	No	1519.6, 16.2.6, 16.2.7, 16.2.9
Valeraldehyde (all isomers)	Y	S/P	3	2G	Cont	Inert	T3	IIB	No	R	F	ABC	No	15.4.6, 15.13, 1519.6, 16.6.1, 16.6.2
Vegetable acid oils (m)	Y	S/P	2	2G	Open	No	-	-	Yes	O	No	ABC	No	1519.6, 16.2.6, 16.2.7, 16.2.9
Vegetable fatty acid distillates (m)	Y	P	2	2G	Open	No	-	-	Yes	O	No	ABC	No	1519.6, 16.2.6, 16.2.7, 16.2.9
Vegetable oil mixtures, containing less than 15% free fatty acid (m)	Y	S/P	2	2G	Open	No			Yes	O	No	ABC	No	1519.6, 16.2.6, 16.2.7, 16.2.9
Vinyl acetate	Y	S/P	3	2G	Cont	No	T2	IIA	No	C	FT	ABC	No	15.12, 15.13, 1517, 1519.6, 16.6.1, 16.6.2
Vinyl ethyl ether	Z	S/P	2	2G	Cont	Inert	T3	IIB	No	R	F	ABC	No	15.4, 15.13, 15.14, 1519.6, 16.6.1, 16.6.2
Vinylidene chloride	Y	S/P	2	2G	Cont	Inert	T2	IIA	No	C	FT	ABC	No	15.12, 15.13, 15.14, 1517, 1519, 16.6.1, 16.6.2
Vinyl neodecanoate	Y	S/P	2	2G	Cont	No			Yes	C	T	ABC	Yes	15.12, 15.13, 1517, 1519, 16.6.1, 16.6.2
Vinyltoluene	Y	S/P	2	2G	Cont	No	T1	IIA	No	C	FT	ABC	No	15.12, 15.13, 1517, 1519.6, 16.6.1, 16.6.2
White spirit, low (15-20%) aromatic	Y	S/P	2	2G	Cont	No	T3	IIA	No	R	FT	ABC	No	15.12.3, 15.12.4, 1519.6, 16.2.9
Wood lignin with sodium acetate/oxalate	Z	S/P	3	2G	Open	No	-	-	NF	O	No	No	No	
Xylenes	Y	P	2	2G	Cont	No	T1	IIA	No	R	F	ABC	No	1519.6, 16.2.9 (h)
Xylenes/ethylbenzene (10% or more) mixture	Y	S/P	2	2G	Cont	No	T2	IIA	No	R	FT	ABC	No	15.12.3, 15.12.4, 1519.6
Xylenol	Y	S/P	2	2G	Cont	No	-	IIA	Yes	C	T	ABC	Yes	15.12, 1517, 1519, 16.2.9
Zinc alkaryl dithiophosphate (C7-C16)	Y	P	2	2G	Open	No			Yes	O	No	ABC	No	1519.6, 16.2.6, 16.2.9
Zinc alkenyl carboxamide	Y	S/P	2	2G	Open	No			Yes	O	No	ABC	No	1519.6, 16.2.6
Zinc alkyl dithiophosphate (C3-C14)	Y	P	2	2G	Open	No			Yes	O	No	ABC	No	

Note ;	
Subindex (a)	If the product to be carried contains flammable solvents such that the flashpoint does not exceed 60°C, then special electrical systems and a flammable-vapour detector shall be provided.
Subindex (b)	Although water is suitable for extinguishing open-air fires involving chemicals to which this footnote applies, water shall not be allowed to contaminate closed tanks containing these chemicals because of the risk of hazardous gas generation.
Subindex (c)	Phosphorus, yellow or white, is carried above its autoignition temperature and therefore flashpoint is not appropriate. Electrical equipment requirements may be similar to those for substances with a flashpoint above 60°C.
Subindex (d)	Requirements are based on those isomers having a flashpoint of 60°C or less; some isomers have a flashpoint greater than 60°C and therefore the requirements based on flammability would not apply to such isomers.
Subindex (e)	Applies to n-decyl alcohol only.
Subindex (f)	Dry chemical shall not be used as fire-extinguishing media.
Subindex (g)	Confined spaces shall be tested for both formic acid vapours and carbon monoxide gas, a decomposition product.
Subindex (h)	Applies to p-xylene only.
Subindex (i)	For mixtures containing no other components with safety hazards and where the pollution category is Y or less.
Subindex (j)	Only certain alcohol-resistant foams are effective.
Subindex (k)	Requirements for Ship Type identified in column e might be subject to regulation 4.1.3 of Annex II of MARPOL.
Subindex (l)	Applicable when the melting point is equal to or greater than 0°C.
Subindex (m)	From vegetable oils, animal fats and fish oils specified in the IBC Code.
Subindex (n)	Confirmation that the product is composed of Triglycerides, C16-C18 and C18 unsaturated shall be required in order for the entry to be used. Otherwise, the more generic entry "Used cooking oil (m)" must be used.
Subindex (o)	Indicates that the entries are to be used solely for backloading of contaminated bulk liquids from offshore installations used in the search and exploitation of seabed mineral resources.
Subindex (*)	Indicates that with reference to Annex 7B-4(101.3), deviations from the normal assignment criteria used for some carriage requirements have been implemented.

Annex 7B-2 List of products to which the Code does not apply

【See Rule】

Product name	Pollution Category
Acetone	Z
Alcoholic beverages, n.o.s.	Z
Apple juice	OS
n-Butyl alcohol	Z
sec-Butyl alcohol	Z
Calcium carbonate slurry	OS
Clay slurry	OS
Coal slurry	OS
Ethyl alcohol	Z
Glucose solution	OS
Glycerol ethoxylated	OS
Hydrogenated starch hydrolysate	OS
Isopropyl alcohol	Z
Kaolin slurry	OS
Lecithin	OS
Maltitol solution	OS
Microsilica slurry	OS
Molasses	OS
Noxious liquid, (11) n.o.s. (trade name ...., contains ....) Cat. Z	Z
Non-noxious liquid, (12) n.o.s. (trade name ...., contains ....) Cat. OS	OS
Orange juice (concentrated)	OS
Orange juice (not concentrated)	OS
Potassium chloride solution (less than 26%)	OS
Propylene glycol	OS
Sodium acetate solutions	Z
Sodium bicarbonate solution (less than 10%)	OS
Sorbitol solution	OS
Sulphonated polyacrylate solution	Z
Tetraethyl silicate monomer/oligomer (20% in ethanol)	Z
Triethylene glycol	OS
Vegetable protein solution (hydrolysed)	OS
Water	OS

Annex 7B-3 Index of Products Carried in Bulk 【See Rule】

1. For the Chapter 19 of **IBC Code**, the first column of the Index of Products Carried in Bulk (hereafter referred to as .the Index.) provides the so called Index Name. Where the Index Name is in capital and in bold, the Index Name is identical to the Product Name in either chapter 17 or chapter 18. The second column listing the relevant Product Name is therefore empty. Where the Index Name is in non-bold lower case it reflects a synonym for which the Product Name in either chapter 17 or chapter 18 is given in the second column. The relevant chapter of the **IBC Code** is reflected in the third column.
2. The Index has been developed for information purposes only. None of the Index Names indicated in non-bold lower case in the first column shall be used as Product Name on the shipping document.
3. Prefixes forming an integral part of the name are shown in ordinary (roman) type and are taken into account in determining the alphabetical order of entries. These include such prefixes as:

   Mono Di Tri Tetra Penta Iso Bis Neo Ortho Cyclo
4. Prefixes that are disregarded for purposes of alphabetical order are in italics and include the following:

   n- (normal-)
   sec- (secondary-)
   tert- (tertiary-)
   o- (ortho-)
   m- (meta-)
   p- (para-)
   N-
   O-
   sym- (symmetrical)
   uns- (unsymmetrical)
   dl-
   D-
   L-
   cis-
   trans-
   (E)-
   (Z)-
   alpha- (α-)
   beta- (β-)
   gamma- (γ-)
   epsilon- (ε-)
   omega- (ω-)
5. The Index utilizes a note after the index name for some entries (shown as (a) or (b)) which indicates that the following qualifications apply:
   (a) This Index Name represents a subset of the corresponding Product Name.
   (b) The Product Name corresponding to this Index Name contains a carbon chain length qualification. Since the Index Name should always represent a subset or be an exact synonym of the corresponding Product Name, the carbon chain length characteristics should be checked for any product identified by this Index Name. ⚓

Annex 7B-4 Criteria for assigning carriage requirements for products subject to the IBC Code 【See Rule】

101. Introduction

1. The following criteria are guidelines for the determination of pollution classification and assignment of appropriate carriage requirements for bulk liquid cargoes being considered as candidates for entry into the IBC Code or annexes 1, 3 or 4 of MEPC.2/Circs.

2. In developing such criteria, every effort has been made to follow the criteria and cut off points developed under the Global Harmonized System (GHS).

3. Although the criteria are intended to be closely defined in order to establish a uniform approach, it must be emphasized that these are guidelines only and, where human experience or other factors indicates the need for alternative arrangements, these shall always be taken into account. Where deviations from the criteria have been recognized, they shall be properly recorded with justifications.

102. Contents

1. This **Annex** contains the following:
   (1) minimum safety and pollution criteria for products subject to **Sec 17**;
   (2) criteria used to assign the minimum carriage requirements for products that meet the safety or pollution criteria to make them subject to **Sec 17**
   (3) criteria used for determining special requirements in **Sec 15** to be included in column o of **Sec 17**
   (4) criteria used for determining special requirements in **Sec 16** to be included in column o of **Sec 17**
   (5) definitions of properties used within this **Annex**
   (6) information on the use of the GESAMP Hazard Ratings; and .7 information on the application of the SVC/LC_{50} ratio method.

2. The information included in parentheses following the classification criteria throughout this chapter refers to the GESAMP Hazard Profile ratings set out in appendix I of MARPOL Annex II under the "Abbreviated legend to the revised GESAMP Hazard Evaluation procedure". The full listing of GESAMP Hazard Profile ratings for evaluated substances are published annually in the GESAMP Composite List as a PPR Circular. It should be noted that ratings in parentheses (based on estimation methods applied by GESAMP) are considered as equivalent to ratings without parentheses for the purpose of assigning carriage requirements. *(2021)*

103. Minimum safety and pollution criteria for products subject to chapter 17 of the IBC Code

1. Products are deemed to be hazardous and subject to chapter 17 of the IBC Code if they meet one or more of the following criteria: *(2021)*
   (1) inhalation $LC_{50} \leq 20\ mg/l/4h$ (see definitions in **107. 1** (1)) (C3 = 1, 2, 3 or 4)
   (2) dermal $LD_{50} \leq 2000\ mg/kg$ (see definitions in **107. 1** (2)) (C2 = 1, 2, 3 or 4)
   (3) oral $LD_{50} \leq 2000\ mg/kg$ (see definitions in **107. 1** (3)) (C1 = 1, 2, 3 or 4)
   (4) toxic to mammals by prolonged exposure (see definitions in **107. 2**) (D3 = C, M, R, N, T, or I)
   (5) cause skin sensitization (see definitions in **107. 3**) (D3 = Ss)
   (6) cause respiratory sensitization (see definitions in **107.4**) (D3 = Sr)
   (7) corrosive to skin (see definitions in **107.5**) (D1 = 3, 3A, 3B, or 3C);
   (8) have a Water Reactive Index (WRI) of ≥ 1 (see definitions in **107. 6**)
   (9) require inertion, inhibition, stabilization, temperature control or tank environmental control in order to prevent a hazardous reaction (see definitions in **107. 10**)
   (10) flash point 〈 23℃; and have an explosive/flammability range (expressed as a percentage by volume in air) of ≥ 20%
   (11) autoignition temperature of ≤ 200℃ and
   (12) classified as pollution category X or Y or meeting the criteria for rules 11 to 13 under **104. 5** (1).

104. Criteria used to assign the minimum carriage requirements for products, which meet the minimum safety or pollution criteria to make them subject to chapter 17 of the IBC Code

1. Column a - Product Name

A standardized chemical name, preferably assigned on the basis of the Chemical Abstracts Service (CAS) or the International Union of Pure and Applied Chemistry (IUPAC) system, shall be used as far as possible. However, where this is unnecessarily complex, then a technically correct and unambiguous alternative name may be used.*(2021)*

2. Column b . Deleted

3. Column c - Pollution Category

Column c identifies the pollution category assigned to each product under Annex II of MARPOL 73/78.

Table 1 Pollution Category *(2021)*

Rule	A1 Bio accumulation	A2 Bio degradation	B1 Acute toxicity	B2 Chronic toxicity	D3 Long-term health effects	E2 Effects on marine wildlife and on benthic habitats	Cat
1			≥ 5				X
2	≥ 4		4				
3		NR	4				
4	≥ 4	NR			CMRTNI[1]		
5			4				Y
6			3				
7			2				
8	≥ 4	NR		Not 0			
9				9 ≥ 1			
10						Fp, F or S If not Inorganic	
11							
12	Any product not meeting the criteria of rules 1 to 11 and 13						Z
13	All products identified as: ≤ 2 in column A1; R in column A2; blank in column D3; not Fp, F or S (if not organic) in column E2; and 0 (zero) in all other columns of the GESAMP Hazard Profile						OS

footnote)

1 Applies if the D3 rating contains any of these letters or any combination thereof.

4. Column d - Hazards

(1) An "S" is assigned to column d if any of the safety criteria described in **103. 1** (1) to **103. 1** (11) are met.

(2) A "P" is assigned to column d if the product meets the criteria for assigning Ship Type 1 to 3 as defined by rules 1 to 14 in the **table 2** of **104. 5**. *(2021)*

5. Column e - Ship Type

(1) Assignment of Ship Types is carried out from both a pollution and safety perspective. The basic criteria for assigning Ship Types from a pollution perspective is carried out based on the GESAMP Hazard Profile, shown in table 2. An explanation of the details in the columns is provided in appendix I of MARPOL Annex II.*(2021)*

Table 2 Assignment of Ship Types based on the GESAMP Hazard Profile *(2021)*

Number	A1	A2	B1	B2	D3	E2	Ship Type
1			≥5				1
2	≥4	NR	4		CMRTNI[2]		
3	≥4	NR			CMRTNI[2]		2
4			4				
5	≥4		3				
6		NR	3				
7				≥1			
8						Fp	
9					CMRTNI[2]	F	
10			≥2			S	
11	≥4						3
12		NR					
13			≥1				
14	All other category Y Substances						
15	All other category Z Substances, All "Other Substances" (OS)						NA

footnote)
2 Applies if the D3 rating contains any of these letters or any combination thereof.

(2) The following criteria are used to assign the Ship Type:*(2021)*
(A) Ship Type 1:
- Inhalation LC_{50}/ATE≤ 0.5 mg/L/4h (C3 = 4) and SVC/LC_{50} ≥ 20 and/or
- Dermal LD_{50}/ATE ≤ 50 mg/kg (C2 = 4) and/or
- WRI = 3 and/or
- Auto-ignition temperature ≤ 65°C and/or
- Explosive range ≥ 50% v/v in air and the flashpoint 〈 23°C and/or
- Rules 1 or 2 of the table 2.

(B) Ship Type 2:
- Inhalation LC_{50}/ATE ≤ 0.5 mg/L/4h (C3 = 4) and SVC/LC_{50} 〈 20 or
- Inhalation LC_{50}/ATE 〉 0.5 mg/L/4h - ≤ 2mg/L/4h (C3 = 3) and SVC/LC_{50} ≥ 2 (see note) and/or
- Dermal LD_{50}/ATE 〉 50 mg/kg - ≤ 200 mg/kg (C2 = 3) and/or
- WRI = 2 and/or
- Auto-ignition temperature ≤ 200°C and/or
- Explosive range ≥ 40% v/v in air and the flashpoint 〈 23°C and/or
- Any product meeting the criteria of rules 3 to 10 in table 2.
  Note: Products with a density 〉1025 kg/m^3 (sinkers) or a water solubility of 〉50% (dissolvers) that are assigned to Ship Type 2 based on the inhalation toxicity criteria, may be re-assigned to Ship Type 3.

(C) Ship Type 3:
- Any of the minimum safety or pollution criteria for bulk liquid cargoes subject to **Sec 17** not meeting the requirements for Ship Types 1 or 2 and not meeting rule 15 of table 2.

6. Column f - Tank type

(1) The tank type is assigned according to the following criteria:
(A) Tank type 1G:
- Inhalation LC_{50}/ATE ≤ 0.5 mg/L/4h (C3 = 4) and SVC/LC_{50} ≥ 1000 and/or
- Dermal LD_{50}/ATE ≤ 50 mg/kg (C2 = 4) and/or;
- WRI=3 and/or
- Auto-ignition temperature ≤ 65°C and/or

- Explosive range ≥ 40% v/v in air and the flashpoint 〈 23°C.
- Based on expert judgement, tank type 1G may be required for specific products (e.g. for molten sulphur, hydrochloric acid)

(B) Tank type 2G:
Any of the minimum safety or pollution criteria for bulk liquid cargoes subject to **Sec 17** or the IBC Code not meeting the requirements for tank type 1G.

7. Column g - Tank vents

(1) The tank venting arrangements are assigned according to the following criteria:
(A) Controlled:
- Inhalation LC_{50}/ATE ≤ 10 mg/L/4h (C3 = 2, 3 or 4), unless in accordance with **107. 4** and/or
- Toxic to mammals by prolonged exposure (D3 = C, M, R, T, N, or I) and/or
- Respiratory sensitizer (D3 = Sr, see also paragraph 21.7.4) and/or
- Special carriage control needed and/or
- Flashpoint ≤ 60°C; and Corrosive to skin (≤ 4h exposure). (D1 = 3A, 3B, or 3C).

(B) Open:
Any of the minimum safety or pollution criteria for bulk liquid cargoes subject to **Sec 17** or the IBC Code not meeting the requirements for controlled tank vents.

8. Column h - Tank environmental control

(1) The Tank environmental control conditions are assigned according to the following criteria:
(A) Inert:
Autoignition temperature ≤ 200℃ and/or
Reacts with air to cause a hazard and/or
Explosive range ≥ 40% and the flash point 〈 23℃.
Dry: WRI ≥ 1
(B) Pad : Only applies to specific products identified on a case by case basis.
(C) Vent: Only applies to specific products identified on a case by case basis.
(D) No: Where the above criteria do not apply, (inerting requirements may be required under SOLAS)

9. Column i - Electrical equipment

(1) If the flashpoint of the product is ≤ 60°C or the product is heated to within 15°C of its flash-point then the electrical equipment required are assigned according to the following criteria, otherwise "-" is assigned in column i' and i":
(A) Column i' - Temperature class:
T1 Autoignition temperature ≥ 450℃
T2 Autoignition temperature ≥ 300℃ but 〈 450℃
T3 Autoignition temperature ≥ 200℃ but 〈 300℃
T4 Autoignition temperature ≥ 135℃ but 〈 200℃
T5 Autoignition temperature ≥ 100℃ but 〈 135℃
T6 Autoignition temperature ≥ 85℃ but 〈 100℃
(B) Column i" - Apparatus group:

Apparatus group	MESG at 20 ℃ (mm)	MIC ratio product/methane
IIA	〉 0.9	〉 0.8
IIB	〉 0.50 to ≤ 0.90	〉 0.45 to ≤ 0.80
IIC	≤ 0.5	≤ 0.45

(a) The tests shall be carried out in accordance with the procedures described in IEC 60079-1-1:2002 and IEC 79-3.
(b) For gases and vapours it is sufficient to make only one determination of either the Maximum Experimental Safe Gap (MESG) or the Minimum Igniting Current (MIC) provided that:
(i) for Group IIA: the MESG 〉 0.90 mm or the MIC ratio 〉 0.80
(ii) for Group IIB: the MESG is 〉 0.50 mm and ≤ 0.90 mm; or the MIC ratio is 〉 0.50 and ≤ 0.80 ≥ 0.5 and ≤0.8.

(iii) for Group IIC: the MESG is ≤ 0.50 mm or the MIC ratio is ≤ 0.45

(c) It is necessary to determine both the MESG and the MIC ratio when:

(i) The MIC ratio determination only has been made, and the ratio is between 0.8 and 0.9, when an MESG determination will be required

(ii) The MIC ratio determination only has been made, and the ratio is between 0.45 and 0.5, when an MESG determination will be required or

(iii) The MESG only has been found, and is between 0.5 mm and 0.55 mm, when an MIC ratio determination will be required.

(C) Column i''' Flash point: 〉 60℃ : Yes
≤ 60℃ : No
Non-flammable : NF

10. Column j – Gauging

(1) The gauging equipment is assigned according to the following criteria: *(2021)*

(A) Closed:

- Inhalation LC_{50}/ATE ≤ 2 mg/L/4h (C3 = 3 or 4), unless in accordance with 21.7.12 and/or
- Dermal LD50/ATE ≤ 1000 mg/kg (C2 = 2, 3 or 4) and/or
- Toxic to mammals by prolonged exposure (D3 = C, M, R, T, N, or I) and/or
- Respiratory sensitizer (D3 = Sr, see also paragraph 21.7.4) and/or
- Severely corrosive to skin (≤ 3 min exposure) (D1= 3C).

(B) Restricted:

- Inhalation LC_{50}/ATE 〉2 – ≤10 mg/L/4h (C3 = 2), unless in accordance with 21.7.12 and/or
- Special carriage control indicates inerting required; and/or
- Highly corrosive to skin (〉 3 min – ≤1h exposure) (D1 = 3B) and/or
- Flashpoint ≤ 60°C.
- Open: Any of the minimum safety or pollution criteria for bulk liquid cargoes subject to **Sec 17** or the IBC Code not meeting the requirements for closed or restricted gauging.

(C) Open:

Any of the minimum safety or pollution criteria for bulk liquid cargoes subject to **Sec 17** or the IBC Code not meeting the requirements for closed or restricted gauging.

11. Column k – Vapour detection

(1) The vapour detection equipment is assigned according to the following criteria: *(2021)*

(A) Toxic (T) :

- Inhalation LC_{50}/ATE ≤ 10 mg/L/4h (C3 = 2, 3, or 4), unless in accordance with **107. 12**, and/or
- Respiratory sensitizer (D3 = Sr, see also paragraph **107. 4**) and/or
- Toxic to mammals by prolonged exposure (D3 = C, M, R, T, N, or I)

(B) Flammable (F) : Flash point ≤ 60℃

(C) No : Where the above criteria do not apply.

12. Column l – Fire protection equipment

(1) The appropriate fire-fighting media are defined as being appropriate according to the following criteria related to the properties of the product:

Solubility 〉 10% (〉100000 mg/l)	A Alcohol-resistant foam
Solubility ≤ 10% (≤ 100000 mg/L)	A Alcohol-resistant foam and/or B Regular foam
WRI = 0	C Water spray (generally used as a Regular foam coolant and can be used with A and/or B providing that the WRI = 0)
WRI ≥1	D Dry chemical
	No requirements under this Code. This applies where a product as identified as NF in column i''' (see paragraph 21.4.9.1.3).

(2) Note: all appropriate media shall be listed.

13. deleted.

14. Column n – Emergency Equipment

(1) The requirement to have personnel emergency equipment on board is identified by "Yes" in column n according to the following criteria:

- Inhalation LC_{50}/ATE ≤ 2 mg/L/4h (C3 = 3 or 4) unless in accordance with **107. 12** and/or
- Respiratory sensitizer (D3 = Sr, see also paragraph **107.4**) and/or
- Severely corrosive to skin (≤ 3 min exposure) (D1 = 3C; and/or
- WRI = 2

(2) No: indicates that the above criteria do not apply.

105. Criteria for special requirements in Sec.15 to be included in column o

1. The assignment of special requirements in column o shall normally follow clear criteria based on the data supplied in the reporting form. Where it is considered appropriate to deviate from such criteria, this shall be clearly documented in such a way that it can easily be retrieved on demand.

2. The criteria for making reference to the special requirements identified in **Ch 15** and **Ch 16** are defined below with comments where relevant.

3. 1502. to **1510.** and **1520.**

1502. to **1510.** and **1520.** identify specific products by name with special carriage requirements that cannot be easily accommodated in any other way.

4. 1511. - Acids

1511. applies to all acids unless they:
(1) are organic acids - when only **1511. 2** to **1511. 4** and **1511. 6** to **1511. 8** apply; or
(2) do not evolve hydrogen - when **1511. 5** need not apply.

5. 1512. - Toxic products

(1) All of **1512.** is added to column o according to the following criteria:
- Inhalation LC_{50}/ATE ≤ 2 mg/L/4h (C3 = 3 or 4), unless in accordance with **107. 12**; and/or
- the product is a respiratory sensitizer (D3 = Sr, see also **107. 4**) and/or
- the product is toxic to mammals by prolonged exposure (D3 = C, M, R, T, N, or I).

(2) Paragraphs **1512. 3** and **1512. 4** are added to column o according to the following criterion:
- Inhalation LC_{50}/ATE 〉 2 - ≤ 10 mg/L/4h (C3 = 2), unless in accordance with **107. 12**.

(3) Paragraph **1512. 3** (2) is added to column o according to the following criteria:
- Dermal LD_{50}/ATE ≤ 1000 mg/kg (C2 = 2, 3, or 4) and/or
- Oral LD_{50}/ATE ≤ 300 mg/kg (C1 = 2, 3, or 4).

6. 1513. - Cargoes protected by additives

The requirement to assign **1513.** to column o is based on the information related to the products tendency to polymerise, decompose, oxidise or undergo other chemical changes which may cause a hazard under normal carriage conditions and which would be prevented by the addition of appropriate additives.

7. 1514. - Cargoes with a vapour pressure greater than atmospheric at 37.8℃ The requirement to assign **1514.** to column o is based on the following criterion : Boiling point ≤37.8℃

8. 1516. - Cargo contamination

1516. 1 is deleted.
1516. 2 is added to column o according to the following criterion:
WRI ≥ 1

9. 1517. - Increased ventilation requirements

(1) **1517.** shall be added to column o according to the following criteria:
- Inhalation LC_{50}/ATE 〉 0.5 - ≤ 2 mg/L/4h (C3 = 3), unless in accordance with **107.12** and/or
- Respiratory sensitizer (D3 = Sr, see also paragraph 21.7.4) and/or
- Toxic to mammals by prolonged exposure (D3 = C, M, R, T, N, or I) and/or
- Highly to severely corrosive to skin (≤ 1h exposure time) (D1 = 3B or 3C).

10. 1518. - Special cargo pump-room requirements

(1) **1518.** shall be added to column o according to the following criterion: Inhalation LC_{50}//ATE ≤ 0.5 mg/L/4h (C3 = 4), unless in accordance with **107. 12.**

11. 1519. - Overflow control

(1) **1519.** shall be added to column o according to the following criteria:
- Inhalation LC_{50}/ATE ≤ 2 mg/L/4h (C3 = 3 or 4), unless in accordance with **107. 12** and/or
- Dermal LD_{50}/ATE ≤ 1000 mg/kg (C2 = 2, 3, or 4) and/or

- Oral LD_{50}/ATE ≤ 300 mg/kg (C1 = 2, 3, or 4) and/or
- Respiratory sensitizer (D3 = Sr, see also paragraph **107. 4)** and/or
- Severely corrosive to skin (≤ 3 min exposure) (D1 = 3C) and/or
- Auto-ignition temperature ≤ 200oC and/or
- Explosive range ≥ 40% v/v in air and flashpoint 〈 23°C and/or
- Classified as Ship Type 1 on pollution grounds.

(2) Only **1519. 6** shall apply if the product has any of the following properties:

- Inhalation LC_{50}/ATE 〉 2 mg/L/4h - ≤10 mg/L/4h (C3 = 2), unless in accordance with 21.7.12 and/or
- Dermal LD_{50}/ATE 〉 1000 mg/kg - ≤ 2000 mg/kg (C2 = 1) and/or
- Oral LD_{50}/ATE 〉 300 mg/kg - ≤ 2000 mg/kg (C1 = 1) and/or
- Skin sensitizer (D3='Ss') and/or
- Highly corrosive to skin (〉 3 min - ≤ 1h exposure) (D1 = 3B) and/or
- Flashpoint ≤ 60°C and/or
- Classified as Ship Type 2 on pollution grounds and/or
- Pollution category X or Y.

12. 1521. - Temperature sensors

1521. is added to column o according to the heat sensitivity of the product. This requirement is related to pumps in cargo pump rooms only.

106. Criteria for special requirements in Sec 16 to be included in column o

1. 1601. to **1602. 5** and **1603.** to **1605.**

These apply to all cargoes and so are not referenced specifically in column o.

2. 1602. 6

1602. 6 is added to column o for products, which meet the following criteria:
Pollution Category X or Y and viscosity ≥ 50 mPa.s at 20℃

3. 1602. 9

1602. 9 is added to column o for products, which meet the following criterion:
Melting point ≥ 0℃.

4. 1606. Cargo not to be exposed to excessive heat

1606. 2 to **1606. 4** are added to column o for products, which are identified as requiring temperature control during carriage.

5. 1602. 7

1602. 7 is added to column o for products which meet the following criteria: Pollution Category Y that are persistent floaters (E2 = Fp) with a viscosity greater than or equal to 50 mPa s at 20 ^{0}C and/or with a melting point greater than or equal to 0^{0}C

107. Definitions

1. Acute mammalian toxicity

LC50is the concentration in air, LD 50is the amount (dose) of test substance, which causes mortality to 50% of a test species. ATE refers to a dose (concentration) range or extrapolated dose (concentration) leading to lethal effects in mammals, equivalent to an LC50or LD50.

(1) Acutely toxic if swallowed

Oral toxicity (LD50/ATE)		GESAMP Hazard Profile Rating C1
Hazard level	mg/kg	
High	≤ 0.5	4
Moderately high	〉 5 ≤ 50	3
Moderate	〉 50 ≤ 300	2
Slight	〉 300 ≤ 2000	1
Negligible	〉 2000	0

(2) Acutely toxic in contact with skin

Dermal toxicity (LD50/ATE)		GESAMP Hazard Profile Rating C2
Hazard level	mg/kg	
High	≤ 50	4
Moderately high	〉 50 ≤ 200	3
Moderate	〉 200 ≤ 1000	2
Slight	〉 1000 ≤ 2000	1
Negligible	〉 2000	0

(3) Acutely toxic by inhalation

Dermal toxicity (LD50/ATE)		GESAMP Hazard Profile Rating C
Hazard level	mg/kg	
High	≤ 50	4
Moderately high	〉 0.5 ≤ 2	3
Moderate	〉 2 ≤ 10	2
Slight	〉 10 ≤ 20	1
Negligible	〉 20	0

* All inhalation toxicity data are assumed to be associated with vapours and not mists or sprays, unless indicated otherwise.

2. Toxic to mammals by prolonged exposure

(1) A product is classified as toxic to mammals by prolonged exposure if it meets any of the following criteria:
it is known to be, or suspected of being carcinogenic, mutagenic, reprotoxic, neurotoxic, immunotoxic or exposure below the lethal dose is known to cause Specific Target Organ Toxicity.

(2) Such effects may be identified from the GESAMP Hazard Profile of the product (D3 = C, M, R, T, N, or I) or other recognized sources of such information.

3. Skin sensitization

(1) A product is classified as a skin sensitizer:
(A) if there is evidence in humans that the substance can induce sensitization by skin contact in a substantial number of persons or
(B) where there are positive results from an appropriate animal test.

(2) Such effects are identified in the GESAMP Hazard Profile for the product (D3 = Ss).

4. Respiratory sensitization

A product is classified as a respiratory sensitizer

(1) if there is evidence in humans that the substance can induce specific respiratory hypersensitivity and/or
(2) where there are positive results from an appropriate test and/or
(3) where the product does not have a GESAMP Hazard Profile and is identified as a skin sensitizer and there is no evidence to show that it is not a respiratory sensitizer.

5. Corrosive to skin*

Hazard Level	Exposure time to cause full thickness necrosis of skin	GESAMP Hazard Profile Rating D1
Severely corrosive to skin	≤ 3 min	3C
Highly corrosive to skin	〉3 min ≤ 1h	3B
Moderately corrosive to skin	〉1h ≤ 4h	3A

Note *: A rating of 3 or (3) in the D1 column of the GESAMP Hazard Profile without any additional letter notation (A, B or C), means that the severity of corrosivity has not been established. For such cases, a rating of 3 or (3) is understood to be equivalent to a rating of 3B for the purpose of assigning carriage requirements.

6. Water reactive substances

These are classified as follows:

Water reactive index (WRI)	Definition
3	Any chemical which is extremely reactive with water and produces large quantities of flammable, toxic or corrosive gas or aerosol
2	Any chemical which, in contact with water, may produce a toxic, flammable or corrosive gas or aerosol
1	Any chemical which, in contact with water, may generate heat or produce a nontoxic, nonflammable or noncorrosive gas
0	Any chemical which, in contact with water, would not undergo a reaction to justify a value of 1, 2 or 3

7. Air reactive substances

Air reactive substances are products which react with air to cause a potentially hazardous situation, e.g. the formation of peroxides which may cause an explosive reaction.

8. Electrical apparatus - Temperature Class (for products which either have a flashpoint of ≤ 60℃ or are heated to within 15℃ of their flashpoint)

(1) The Temperature Class is defined by the International Electrotechnical Commission (IEC) as:
The highest temperature attained under practical conditions of operation within the rating of the apparatus (and recognized overloads, if any, associated therewith) by any part of any surface, the exposure of which to an explosive atmosphere may involve a risk.
(2) The Temperature Class of the electrical apparatus is assigned by selecting the Maximum Surface Temperature which is closest to, but less than, the product's autoignition temperature (see **104. 9** (1) (A)).

9. Electrical apparatus - Apparatus group (for products with a flashpoint of ≤ 60℃)

(1) This refers to intrinsically safe and associated electrical apparatus for explosive gas atmospheres which the IEC divide into the following groups:
(A) Group I: for mines susceptible to firedamp (not used by IMO) and
(B) Group II: for applications in other industries - further sub-divided according to its Maximum Experimental Safe Gap (MESG) and/or the Minimum Igniting Current (MIC) of the gas/vapour

into groups IIA, IIB and IIC.

(2) This property cannot be determined from other data associated with the product; it has to be either measured or assigned by assimilation with related products in an homologous series.

10. Special carriage control conditions

(1) Special carriage control conditions refer to specific measures that need to be taken in order to either prevent a hazardous reaction. They include:

(A) Inhibition: the addition of a compound (usually organic) that retards or stops an undesired chemical reaction such as corrosion, oxidation or polymerization;

(B) Stabilization: the addition of a substance (stabilizer) that tends to keep a compound, mixture or solution from changing its form or chemical nature. Such stabilizers may retard a reaction rate, preserve a chemical equilibrium, act as antioxidants, keep pigments and other components in emulsion form or prevent the particles in colloidal suspension from precipitating;

(C) Inertion: the addition of a gas (usually nitrogen) in the ullage space of a tank that prevents the formation of a flammable cargo/air mixture;

(D) Temperature control: the maintenance of a specific temperature range for the cargo in order to prevent a hazardous reaction or to keep the viscosity low enough to allow the product to be pumped; and

(E) Padding and venting: only applies to specific products identified on a case by case basis.

11. Flammable cargoes

(1) A cargo is defined as flammable according to the following criteria:

IBC Code descriptor	Flash point (degree Centigrade)
Highly flammable	〈 23
Flammable	23 ≤ but ≤ 60

(2) It should be noted that flash points of mixtures and aqueous solutions need to be measured unless all of the components are non-flammable.

(3) It should be noted that the carriage of bulk liquid cargoes which have a flash point of 〈60℃ is subject to other SOLAS regulations.

12. Application of the SVC/LC_{50} ratio method

(1) If the vapour pressure and the molecular weight of a substance are known, an estimate of the maximum vapour concentration in a closed compartment (e.g. a tank) can be calculated. This is called the Saturated Vapour Concentration (SVC).

(2) The hazard quotient SVC/LC_{50} is a substance specific value for the velocity of a vapour for achieving a hazardous concentration when emerging from a liquid source (e.g. leak, spillage or tank ventilation), and can be used in the assignment of specific carriage requirements related to inhalation toxicity. ATE values can be considered as equivalent to LC_{50} values. See **107. 1**.

(3) If a solid substance is transported in an aqueous solution, the vapour pressure of this solid rather than that of water may be used in the calculation of the SVC/LC_{50} ratio. If this data is not available, an estimate may be used.

(4) Application of the SVC/LC_{50} ratio for assigning Ship Type and Tank type

(A) For the assignment of Ship Type and tank type, as set out in **104. 5** and **104. 6**, the application of the SVC/LC_{50} ratio method is optional. Should this method be used, the vapour pressure at 20°C shall be used when calculating the SVC/LC_{50} ratio.

(B) The SVC mg/L of a substance should be calculated as follows:

$$SVC(mg/L) = \left(\frac{vapour\ \ pressure@20℃\,(Pa)}{101300\,(Pa)} \times 10^6\right) \times \frac{M_{w(g/mol)}}{24(L/mol) \times 1000}$$

where MW is the molecular weight of the substance.

(C) The SVC/LC_{50} ratio should be calculated as follows:

$$SVC/LC_{50} = \frac{SVC(mg/L)}{LC_{50}mg/L/4h}$$

(5) Application of the SVC/LC_{50} ratio for assigning carriage requirements

(A) For the carriage requirements listed in 21.7.12.5.5, the application of the SVC/LC_{50} ratio method is optional. If the SVC/LC_{50} ratio method is used in the assignment of these carriage requirements, the vapour pressure at 40°C shall be used when calculating the SVC/LC_{50} ratio. If the carriage temperature is higher than 40°C, then the SVC/LC_{50} ratio should be calculated at that temperature.

(B) The SVC (mg/l) of a substance should be calculated as follows:

$$SVC(mg/L) = (\frac{vapour\ \ pressure@40℃(Pa)}{101300(Pa)} \times 10^6) \times \frac{M_{w(g/mol)}}{26(L/mol) \times 1000}$$

where MW is the molecular weight of the substance.

(C) The SVC/LC_{50} ratio should be calculated as follows:

$$SVC/LC_{50} = \frac{SVC(mg/L)}{LC_{50}mg/L/4h}$$

(D) The SVC (mg/L) formula described in 21.7.12.5.2 is standardized for calculations at 40°C. When using the vapour pressure at higher temperatures in the calculations, the formula must be amended accordingly.

(E) For the following carriage requirements, the SVC/LC_{50} ratio method, calculated at 40°C or higher, may be used as an alternative to the acute inhalation toxicity criteria given in paragraphs 21.4 and 21.5:

(a) Column g - Tank vents
Assignment of controlled venting is not required based on the inhalation hazard only, if:
Inhalation LC_{50}/ATE ≤ 10 mg/L/4h (C3 = 2, 3, or 4) and SVC/LC_{50} 〈 0.2

(b) Column j - Gauging Closed gauging is not required based on the inhalation hazard only, if:
Inhalation LC_{50}/ATE ≤ 2 mg/L/4h (C3 = 3 or 4) and SVC/LC_{50} 〈 0.2 but restricted gauging is required.
Restricted gauging is not required based on the inhalation hazard only, if: Inhalation LC_{50}/ATE 〉 2 - ≤ 10 mg/L/4h (C3 = 2) and SVC/LC_{50} 〈 0.2

(c) Column k - Vapour detection
Assignment of toxic vapour detection is not required based on the inhalation hazard only, if:
Inhalation LC_{50}/ATE ≤ 10 mg/L/4h (C3 = 2, 3, or 4) and SVC/LC_{50} 〈 0.2

(d) Column n - Emergency Equipment
Inhalation LC_{50}/ATE ≤ 2 mg/L/4h (C3 = 3 or 4) and SVC/LC_{50} 〈 0.2

(e) Column o - Special requirements in **Sec.15**

(i) **1512. 1** and **1512. 2** are not required based on the inhalation hazard only, if:
Inhalation LC_{50}/ATE ≤ 2 mg/L/4h (C3 = 3 or 4) and SVC/LC_{50} 〈 0.2

(ii) **1512. 3** and **1512. 4** are not required based on the inhalation hazard only, if:
Inhalation LC_{50}/ATE 〉2 - ≤ 10 mg/L/4h (C3 = 2) and SVC/LC_{50} 〈 0.2

(iii) **1517.** is not required based on the inhalation hazard only, if:
Inhalation LC_{50}/ATE ≤ 0.5 mg/L/4h (C3 = 4) and SVC/LC_{50} 〈 0.2

(iv) **1518.** is not required based on the inhalation hazard only if:
Inhalation LC_{50}/ATE ≤ 0.5 mg/L/4h (C3 = 4) and SVC/LC_{50} 〈 0.2

(v) **1519.** is not required based on the inhalation hazard only, if:
Inhalation LC_{50}/ATE ≤ 2 mg/L/4h (C3 = 3 or 4) and SVC/LC_{50} 〈 0.2, but 15.19.6 applies

(vi) **1519. 6** is not required based on the inhalation hazard only, if:
Inhalation LC_{50}/ATE 〉 2 - ≤ 10 mg/L/4h (C3 = 2) and SVC/LC_{50} 〈 0.2" ⚓

Rules for the Classification of Steel Ships
Guidance Relating to the Rules for the Classification of Steel Ships

PART 7 SHIPS OF SPECIAL SERVICE (Ch 5,6)

Published by
KR
36, Myeongji ocean city 9-ro, Gangseo-gu,
BUSAN, KOREA
TEL : +82 70 8799 7114
FAX : +82 70 8799 8999
Website : http://www.krs.co.kr

Copyright© 2025, KR
Reproduction of this Rules and Guidance in whole or in parts is prohibited without permission of the publisher.